This is a digital copy of a book that was preserved for generations on library shelves before it was carefully scanned by Google as part of a project to make the world's books discoverable online.

It has survived long enough for the copyright to expire and the book to enter the public domain. A public domain book is one that was never subject to copyright or whose legal copyright term has expired. Whether a book is in the public domain may vary country to country. Public domain books are our gateways to the past, representing a wealth of history, culture and knowledge that's often difficult to discover.

Marks, notations and other marginalia present in the original volume will appear in this file - a reminder of this book's long journey from the publisher to a library and finally to you.

Usage guidelines

Google is proud to partner with libraries to digitize public domain materials and make them widely accessible. Public domain books belong to the public and we are merely their custodians. Nevertheless, this work is expensive, so in order to keep providing this resource, we have taken steps to prevent abuse by commercial parties, including placing technical restrictions on automated querying.

We also ask that you:

+ *Make non-commercial use of the files* We designed Google Book Search for use by individuals, and we request that you use these files for personal, non-commercial purposes.

+ *Refrain from automated querying* Do not send automated queries of any sort to Google's system: If you are conducting research on machine translation, optical character recognition or other areas where access to a large amount of text is helpful, please contact us. We encourage the use of public domain materials for these purposes and may be able to help.

+ *Maintain attribution* The Google "watermark" you see on each file is essential for informing people about this project and helping them find additional materials through Google Book Search. Please do not remove it.

+ *Keep it legal* Whatever your use, remember that you are responsible for ensuring that what you are doing is legal. Do not assume that just because we believe a book is in the public domain for users in the United States, that the work is also in the public domain for users in other countries. Whether a book is still in copyright varies from country to country, and we can't offer guidance on whether any specific use of any specific book is allowed. Please do not assume that a book's appearance in Google Book Search means it can be used in any manner anywhere in the world. Copyright infringement liability can be quite severe.

About Google Book Search

Google's mission is to organize the world's information and to make it universally accessible and useful. Google Book Search helps readers discover the world's books while helping authors and publishers reach new audiences. You can search through the full text of this book on the web at `http://books.google.com/`

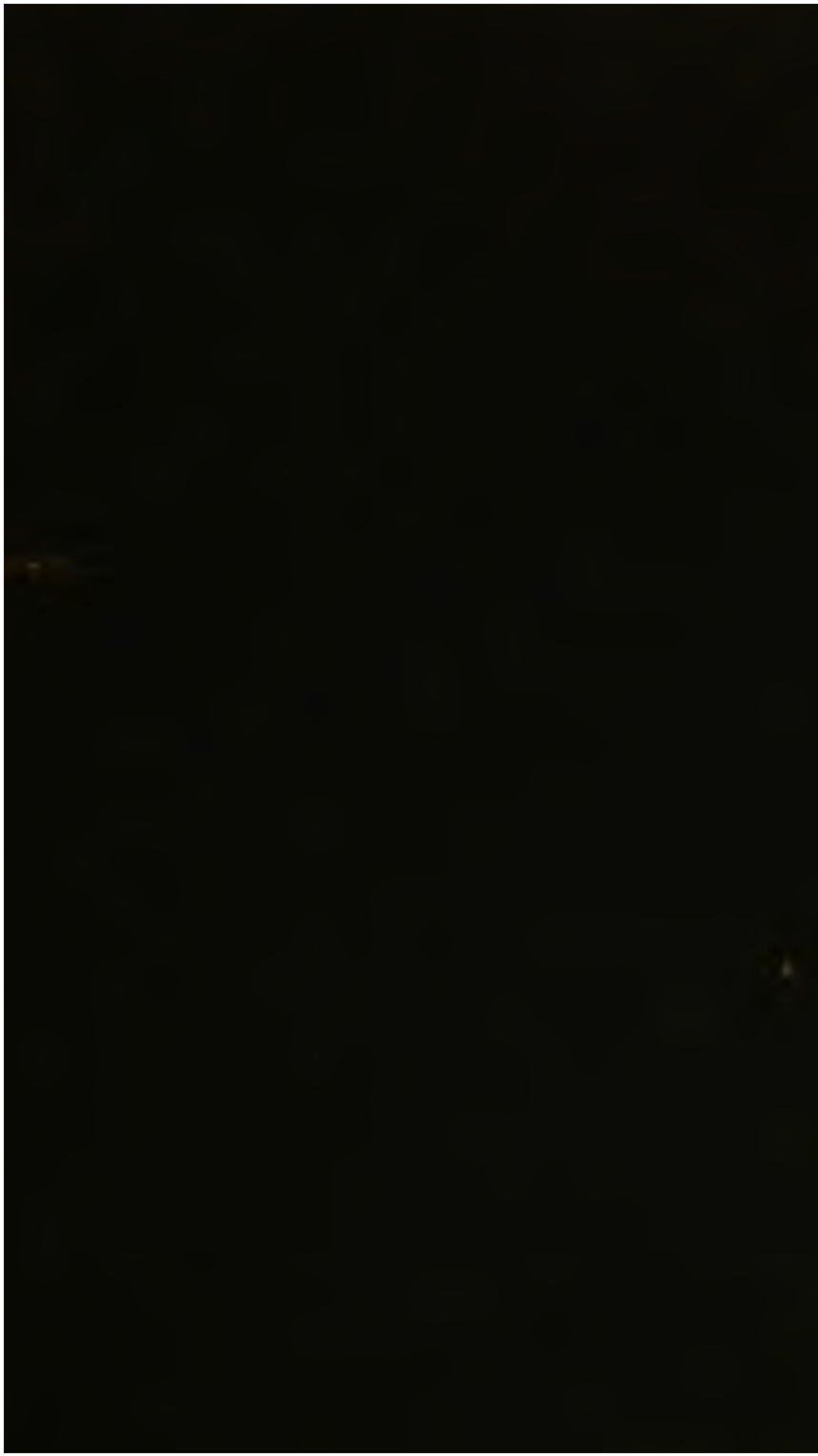

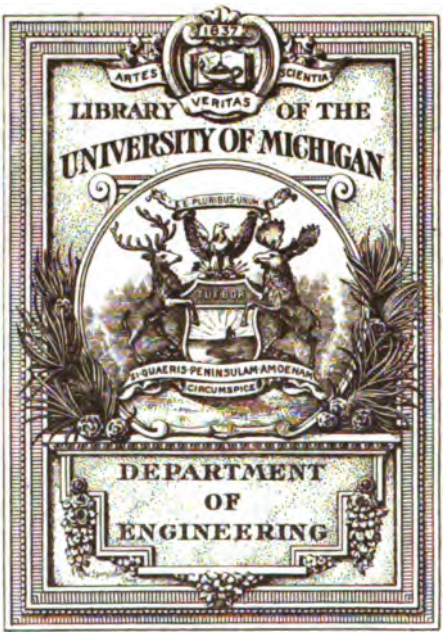
ARTES
VERITAS
SCIENTIA
LIBRARY OF THE
UNIVERSITY OF MICHIGAN
E PLURIBUS UNUM
SI QUAERIS PENINSULAM AMOENAM
CIRCUMSPICE
DEPARTMENT
OF
ENGINEERING

TA
5
I 6
1915
V 11

TRANSACTIONS

OF THE

INTERNATIONAL ENGINEERING CONGRESS, 1915

MISCELLANY

SESSIONS HELD UNDER THE AUSPICES OF

American Society of Civil Engineers
American Institute of Mining Engineers
The American Society of Mechanical Engineers
American Institute of Electrical Engineers
The Society of Naval Architects and Marine Engineers

SAN FRANCISCO, CALIFORNIA, SEPTEMBER 20-25, 1915

SAN FRANCISCO, CALIFORNIA

PRESS OF THE NEAL PUBLISHING COMPANY
SAN FRANCISCO, CALIFORNIA
1916

CONTENTS

PAPERS

No.		PAGE
223	THE "ARRIVAL" OF THE AEROPLANE.	
	By Algernon E. Berriman	1
224	A DISCUSSION CONCERNING THE THEORY OF SUSTENTATION AND EXPENDITURE OF POWER IN FLIGHT.	
	By F. W. Lanchester	36
225	EXPERIMENTAL RESEARCHES IN FRANCE ON THE RESISTANCE OF AIR.	
	By L. Marchis	61
226	A REVIEW OF HYDRODYNAMICAL THEORY AS APPLIED TO EXPERIMENTAL AERODYNAMICS.	
	By J. C. Hunsaker	160
227	THE DEVELOPMENT OF REFRIGERATION IN THE UNITED STATES.	
	By J. F. Nickerson	208
	Discussion:	
	By George B. Stacy	233
	W. P. Stevens	233
	C. M. Gay	233
	T. O. Vilter	233
228	REFRIGERATION IN SWEDEN.	
	By Thor Andersson	235
229	REFRIGERATION IN FRANCE.	
	By L. Marchis	238
	Discussion:	
	By J. F. Nickerson	268
230	SOME OBSERVATIONS ON THE EXTENT AND VALUE OF FARM POWER EQUIPMENT.	
	By Philip S. Rose	269
	Discussion:	
	By I. W. Dickerson	286

294569

No. PAGE

231 **AGRICULTURE AND THE ENGINEER.**

By J. B. Davidson 288

Discussion:

By S. V. Walton 298
W. D. Young 299
J. B. Davidson ..... 299 and 304
H. H. Musselman 299
D. S. Coates 301
L. W. Page 302

232 **TECHNICAL EDUCATION FOR THE PROFESSIONS OF APPLIED SCIENCE.**

By Ira N. Hollis 306

233 **SOME CONSIDERATIONS REGARDING ENGINEERING EDUCATION IN AMERICA.**

By George F. Swain 326

Discussion:

By W. F. Durand 340
C. D. Marx 341
Mansfield Merriman 342
J. C. Clark 343
A. H. Fuller 343
Alexander C. Humphreys 343
C. Derleth, Jr. 345

234 **SCIENTIFIC AND ENGINEERING IMPROVEMENTS IN THE HEATING AND VENTILATING ART.**

By Rolla C. Carpenter 349

Discussion:

By Barry Dibble 357
Thomas Morrin ..... 357 and 358
R. M. Wilson 358
C. S. Kaiser 358

235 **RECENT DEVELOPMENTS IN HEATING AND VENTILATION.**

By D. D. Kimball 359

Discussion:

By C. W. Baker 377
Paul F. Johnson 377
D. D. Kimball 378

236 **VACUUM, VACUO-VAPOR AND ATMOSPHERIC HEATING SYSTEMS.**

By James David Hoffman 379

Discussion:

By W. G. Snow 412
A. A. Coddington 413
Thos. Morrin 414

No. PAGE

237 **DEVELOPMENT AND PROGRESS IN "SCIENTIFIC MANAGEMENT" DURING RECENT YEARS.**

By **E. P. Lesley**..... 417

Discussion:

By G. L. SULLIVAN..... 440
J. M. O'CONNELL.....440 and 441
J. L. JACOBS.....440 and 441
E. P. LESLEY..... 440
W. F. DURAND..... 441
WALTER M. POLAKOV..... 441

238 **INDUSTRIAL MANAGEMENT.**

By **A. Hamilton Church**..... 446

Discussion:

By FRED M. HOLADAY..... 472
L. DUNCAN..... 472
GEO. W. DICKIE..... 472
A. HAMILTON CHURCH..... 472

239 **MOTION STUDY AND TIME STUDY INSTRUMENTS OF PRECISION.**

By **Frank B. Gilbreth and Lillian Moller Gilbreth**..... 473

240 **THE STATUS OF ENGINEERING IN CHILE.**

By **The Institute of Engineers of Chile**..... 489

Paper No. 223

THE "ARRIVAL" OF THE AEROPLANE.*

By

ALGERNON E. BERRIMAN, M. I. A. E., A. F. Aë. S.
Chief Engineer of the Daimler Co.
Coventry, England

INTRODUCTION.

In the title of my paper I use the word "arrival" in the sense in which one says of a man and his career "He has arrived".

The aeroplane has "arrived" in the present war, which has provided just the setting that was needed to convince the public of its real worth. Previously, aeroplanes were to the public just wonderful inventions, something to be quizzed, like caged animals that are familiar enough—at the Zoo.

Today, this same class of machine has become one of our national institutions—an accepted, respected fact destined to pass muster henceforth among the commonplace wonders in the service of man.

For the moment, it is employed as an engine of destruction, but ultimately we may hope for a final rôle wherein it may minister more truly to his welfare.

Since the beginning of the war, the aeroplane has played such an important part as to have become an outstanding feature of the conflict. The presence of this new "Fourth Arm", as it has been called, has unquestionably revolutionised some of the more important conditions of warfare, although it has not yet revolutionised the mode of warfare itself. Cavalry, infantry, and artillery continue their appointed work, and although the reconnaissance work of aircraft is perhaps more closely related to the duties of cavalry than to either of the other arms, such an addi-

* The Committee of Management is indebted to Dr. A. F. Zahm, Research Department, Curtiss Aeroplane Co., for valuable assistance in obtaining and editing the papers on Aeronautics.

tional useful function as the direction of artillery fire will alone serve to place aircraft in an entirely new category.

Although the war is directly responsible for the present widespread recognition of the aeroplane's part as a military arm and as a reliable vehicle, the foundations of the successful behaviour that have roused this general esteem have been the work of a long period of most painstaking labour. The science of its design and the art of its use have not been born in this hour of necessity.

When I say that the British Government, at the outbreak of the war, was in a position to invite tenders from engineering firms generally for the construction of aeroplanes to Government designs, for which fully detailed drawings and specifications were in readiness, I consider that I am paying the highest possible tribute to the enthusiasm and dogged determination of those latter-day pioneers who are really responsible for the "arrival" of the aeroplane in the present war.

More than this they could not accomplish, for the engineering of its construction in sufficient quantities to meet the country's real needs, as now demonstrated, is susceptible only of a financial solution, such as a national purse can alone provide. Today those purse strings are thoroughly loosened for the first time.

So recently as 1913 the Navy League organised a campaign for influencing public opinion in favour of an estimate of at least £1,000,000 sterling for aeronautics in the forthcoming National Budget. Notwithstanding all efforts—and the campaign received the unscheduled, but none the less welcome, stimulus of a scare caused by the reported visit of a strange airship to our shores—the public at large remained stolidly apathetic and raised no murmur when Parliament at last voted only half the anticipated sum.

For them, the aeroplane had not yet "arrived",—and this, as I say, was within almost a twelvemonth of the outbreak of the war.

For the two previous years, the figures for the national expenditure on aeronautics were only £308,000 and £131,000. I have no knowledge whatever as to the total national expenditure to date this year, nor can anyone foretell the amount that it will attain; but it is certain that several contractors are now working upon the execution of contracts each of which represents a figure in the order of those just mentioned.

When, therefore, it is realised that the aggregate of the nation's expenditure has hardly represented more than a decent amount of business for one or two large firms, it is possible to appreciate the brave spirit in which those earlier workers maintained this diminutive aeronautical industry.

MANUFACTURE AS DISTINCT FROM DESIGN.

The fact that the British Government was in a position, at the outbreak of the war, to invite tenders for aeroplanes of official design, and that many non-aeronautical firms, notably among those in the automobile industry, contracted to build these machines, affords a good illustration of the line that can and, in my opinion, should be drawn between manufacture and design. This division of industry does not always commend itself to the inventive genius, and instances are not few in the field of engineering where good workers have confused their opportunities by lack of this perception.

Engineering, in the commercial sense, is fundamentally a financial problem, being primarily concerned with the uninterrupted employment of the invested capital represented by the buildings and machinery belonging to the firm. One design of article is better than another according to the degree to which its greater popularity commands a greater amount of profitable business. From a manufacturer's standpoint, it is a matter of indifference whether the design is an aeroplane or a motor car, so long as the existing organization and machinery are capable of producing it.

In this connection, however, I may say at once that it is not advisable to try to build aeroplanes in a motor-car factory that is also fully engaged on its proper work, without planning for extensions both to buildings and machinery, as the very size of an aeroplane, to say nothing of the multiplicity of its details, precludes the possibility of its being sandwiched in as a mere "addition to schedule" in some already full works' programme. Moreover, the requirements, both in material and labour, are sufficiently uncommon to monopolise much of the time of the managing staff.

For the construction of aeroplane engines, however, the normal capacity of a well-equipped automobile factory should

already be adequate, except in so far as the capacity of the machine shop will inevitably represent the narrow neck of the bottle when it becomes a question of a high rate of output. Also, it is important to recognise the fact that the building of aeroplane engines contributes no industry to several other departments that are necessary to the construction of a complete motor car. These are, of course, purely economical considerations and do not affect the potential utility of a properly equipped motor-car factory for the purpose of building aeronautical engines in emergency.

As an example, I might mention that the famous Gnome rotary motor, hitherto built only in France, was reproduced and running in England within eight weeks from the outbreak of the war. There were neither drawings nor specifications, but a sample engine was dismantled and measured, and the drawings were completed in one week. In the Gnome engine, every part is finished all over, and the cost of the machining labour is therefore disproportionately high. Indeed, there is so much work for the heavy capstan type of lathe as to monopolise this section of the machine shop, and, therefore, to cause some general disorganisation, unless due precautions are taken.

The problems relating to the building of aeroplanes to existing designs are purely those common to manufacturing engineering generally, and the path to a successful issue is not necessarily affected by lack of expert knowledge of the problems underlying design. Provided the drawings are accurate and the specifications exact, the product ensues as a matter of course upon the setting in motion of any organisation that has the capacity to produce it. It should hardly be necessary to emphasise the need for system and care in handling outside designs of this character, particularly when they are subject to frequent alteration, but such precautions appertain to the province of general business ability, and are needed in every walk of life.

From the little I have already said about the constructional side of aeronautical engineering, it should readily be apparent that the problem of supply can be trusted to find its own solution if the time ever comes for the aeroplane to take a permanent place among the accessories of civil life.

For the moment, it is purely an instrument of war, but its

already phenomenal success in this field of operations ensures the permanence of its military importance and the continuity of its development in time of peace. None can foresee the outcome of this régime, but it seems to me impossible to believe otherwise than that aircraft will ultimately attain to a wider sphere of employment than is indicated by their purely military use.

THE NON-MILITARY AEROPLANE OF WAR.

Notwithstanding the fact that the aeroplane of today is essentially military in its importance, it would be misleading to suppose that it is equally military in its design.* On the contrary, most warplanes are merely flying machines, directly descended from the pioneer types and some hardly possess any of the characteristics that military men have frequently emphasised as necessary.

The most important defect of the majority of modern aircraft, when regarded as fighting machines, is the restriction of forward gun fire imposed by the presence of the tractor screw. For the effective use of a gun nothing has yet been built to equal the "pusher", but this type itself tends to be deficient in speed.

It is unreasonable to expect one type of aeroplane to fulfil all the requirements of war. Reconnaissance is the primary function of military aeronautics, but such aircraft need at least

* For a comprehensive discussion of the military requirements in aeroplane design, see the following papers read before the Aeronautical Society of Great Britain, and published in the Aeronautical Journal as follows:

"The Military Aeroplane", Col. J. E. Capper, Vol. XVI, No. 61, Jan. 1912.

"The Military Aeroplane", Major Radcliffe, Vol. XVI, No. 61, Jan. 1912.

"Military Airships", Lieut. C. M. Waterlow, Vol. XVI, No. 62, April 1912.

"The Design of a Military Scouting Aeroplane", Brig. Gen. D. Henderson, Vol. XVI, No. 63, July 1912.

"Aeroplanes in the Light of the Military Trials", A. E. Berriman, Vol. XVI, No. 64, Oct. 1912.

"Air Targets for Artillery and Rifle Practice", Brig. Gen. F. G. Stone, Vol. XVII, No. 65, Jan. 1913.

"Military Aviation", Major F. H. Sykes, Vol. XVII, No. 67, July 1913.

"The Coming Airship", Capt. C. M. Waterlow, Vol. XVIII, No. 69, Jan. 1914.

"Further Developments of Military Aviation", Lieut. Col. F. H. Sykes, Vol. XVIII, No. 70, April 1914.

the protection of a fast scout while their complete freedom of the air can only be established by an absolutely superior real fighting fleet. These three classes are fundamental: there remain to be fulfilled such special purposes as bomb dropping and other incidental duties that may be dictated by the changing phases of a campaign.

Both as an offensive and defensive quality, speed is probably the most important factor in aeroplane design and it is when considering the conditions that regulate the speed of aircraft that we enter the realm of theory by one of its most interesting doors.

AEROPLANE RESISTANCE.

Air Resistance.

Motion being the consequence of force overcoming resistance, and speed being merely the measure of its rate, the basis of this discussion must necessarily be founded on the principles underlying resistance to motion in air. And it may be said, without much deviation from the truth, that the investigation of these laws has for several years constituted the chief occupation of scientific aeronautical research.

The absolute and primary importance of such information is obvious. Knowing the resistance to be overcome, the engine power required to attain a given speed resolves itself into a problem of arithmetical simplicity. Without this knowledge, the potential capabilities of an aeroplane remain unknown; its design is sheer guess work or an expression of purely personal opinion.

Already, the resistances of a great number of forms have been tested experimentally, and the ablest mathematical minds have studied the theoretical side of the problem in all its bearings.

In England the modern starting point in a long series of carefully conducted researches was the investigation of the resistance of small square plates in a uniform current of air* followed by similar experiments on large boards exposed to the wind.

* See Stanton's "Resistance of Plane Surfaces in a Uniform Current of Air" and "Experiments on Wind Pressure", published in 1907 and 1908 by the National Physical Laboratory, Bushey House, Teddington, England.

It is self-evident that a flat plate forms the simplest model with which to commence an experimental campaign into the resistances opposed by solid forms to the flow of a current of air. Equally is it apparent that a very thin flat plate, first placed facing the stream and then placed edge-on to the stream, should afford comparisons of two extreme conditions of fundamental interest and importance. In the former case, the plate offers what is apparently the maximum possible direct obstruction. In the latter case, the resistance presumably attains its least possible value. Moreover, the mind readily imagines a marked distinction between the natures of these two resistances. In the case of the plate facing the wind, there is the effect of a barrier, or dam, causing a definite interruption of the air flow, whereas in the case of the plate edge-on to the line of motion, the fluid is parted as by a knife, and the resistance is caused by the friction of the air molecules rubbing along the surface.

If, in the first of the above described experiments, the effect of the obstruction presented by a flat plate of area A were to bring to rest the air of density ρ flowing at a velocity v, then the resistance of the plate would be expressed approximately by the equation

$$\text{Force} = \text{Constant} \times \text{density} \times \text{Area} \times \text{Velocity}^2$$
$$F = C \times \rho \times A \times v^2$$

and the value of the constant would be unity.

Actually, the constant C is in no case unity. Dr. Stanton, of the National Physical Laboratory, established some years ago the following experimental values for square plates, and they are still the standard coefficients.

Small plates. $C = 0.507$
Large plates. $C = 0.62$

In a more convenient form, the wind pressure on a large flat surface standing normal to the stream may be expressed:

$$F \text{ (lbs./sq. ft.)} = V^2/306$$

where V is the air speed in miles per hour.

From the variation in the above coefficients with the linear dimension of the plate, Lord Rayleigh pointed out* that the "v^2" law of resistance, hitherto assumed true, could not be strictly

* See "Technical Report of the Advisory Committee for Aeronautics", Vol. 1909-10, page 38.

accurate; in short, that if, as had been proved, there was a variation of F with l (l being a linear dimension of the plate), then there must also be a variation of F with v and with ν.†

Very great importance attaches to this result,‡ because exigencies of time, space and economy make it necessary to use models in experimental research. It is highly important to be able accurately to adjust the scale effect when applying the results of such research to full-sized machines. For rough approximations, however, the v^2 law is commonly regarded as sufficiently correct to cover moderate speed ranges.**

Turning to the edge-on position of the thin flat plate, the v^2 law is found definitely not to apply, nor is the resistance even directly proportional to the area exposed to contact with the stream. To Dr. Zahm the credit is due for experimentally establishing the law of frictional resistance in air.*** His fundamental equation is as follows:*

$$\text{Force} = \text{Constant} \times \text{Area}^{.93} + \text{Velocity}^{1.86}$$
$$F = k \times A^{.93} + V^{1.86}$$

When F is the total resistance of both surfaces of a plate measuring A square feet in single surface area; the value of $k = 0.0000082$.

There is thus no constant relationship between the face pressure and surface friction of a plate, but it may help to fix ideas to calculate a particular case, e. g., for a single face area of 1170

† The symbol ν denotes what has been termed the kinematic viscosity of the fluid. It might better have been expressed as the Specific Viscosity, for it is viscosity divided by density. Its dimensions are L^2T^{-1}.

‡ Commonly referred to as the law of dynamical similarity.

** For charts illustrating the change in the coefficient with change of velocity over a wide speed range, see the second "Wilbur Wright Memorial Lecture" by Dr. R. T. Glazebrook, C. B., F. R. S., published in The Aeronautical Journal (11 Adam Street, Adelphi, London, W. C.), Vol. XVIII, p. 276. In the Technical Report, Vol. 1912-13, p. 74, it is pointed out that "no serious correction is necessary to the lift values obtained, but that from 15% to 20% should be added to the maximum lift/drift ratio recorded to make them applicable to full-scale aerofoils".

*** For Dr. Zahm's original paper, see "Atmospheric Friction on Even Surfaces", published by the Philosophical Society of Washington.

* This is the form in which the formula is given in the "Technical Report of the Advisory Committee for Aeronautics". See Vol. 1911-12, pages 33, 34.

square feet, moving normally at a uniform speed of 80 m.p.h., the ratio of single-face pressure to double-surface friction is 300 to 1.

Such a vast difference very forcibly draws attention to possible economies in the disposition of surfaces that have to be driven through the air. It is apparent that the case of the flat plate facing the wind must be avoided at all costs, and the conditions represented by the plate edge-on approximated to as nearly as possible.

Stream Line Forms.

Theoretically, it can be shown that obstructions of fish-like or torpedo shape should experience a resistance that is wholly frictional by nature; that is to say, their bulk when thus enclosed by a surface of suitable contour should not give rise to any of the resistance that would be occasioned by the exposure of its flat cross section.† Such shapes are commonly called stream-line.‡ Actually, the result of tests on many different models shows that while the character of their resistances approximates to the friction law, their coefficients always exceed Zahm's constant for a truly flat surface.

It appears from the photographic observation of fluid flow around model stream-line forms that the stream-line flow discontinues its adherence to the contour of the figure as it approaches the tail end of the model.** In the immediate vicinity of the tail there is thus a surface of discontinuity*** enclosing a region of dead water and turbulence, which condition necessarily augments the resistance. See Fig. 1. For this reason, it has been suggested that the nature of the resistance of stream-line forms should properly be regarded as dual; that is to say, partly conforming to the law of surface friction and partly conforming to the v^2 law appropriate to normal surfaces. Apparently, however, the assumption of the frictional law for stream-line forms approxi-

† For proof, see Lanchester's "Aerodynamics", 3rd edition, section 9.

‡ Lanchester's definition is as follows: "A streamline body is one that in its motion through a fluid does not give rise to a surface of discontinuity". "Aerodynamics", 3rd edition, section 23.

** For an illustrated account of these experiments see the "Technical Report of the Advisory Committee for Aeronautics", 1911-12, page 95.

*** For a general discussion on discontinuous motion, see Lanchester's "Aerodynamics", 3rd edition, section 23.

mates to the truth sufficiently for practical purposes, provided that the coefficient appropriate to any particular form is determined by experiment. No single value of the coefficient obtains for any variety of shapes, but the ratio of the flat-plate coefficient, determined by Zahm, to the stream-line coefficient, determined in respect to a number of different models that have been tested, is in the order of 1 : 2.

Assuming this to hold good for some imaginary case, and approximating the exposed surface of a stream-line body in terms of a cylinder πDL (where D = diameter and L = length) we get a ratio of surface/section = $4L/D$, from which we may obtain a rough idea of the kind of fundamental relationship that might

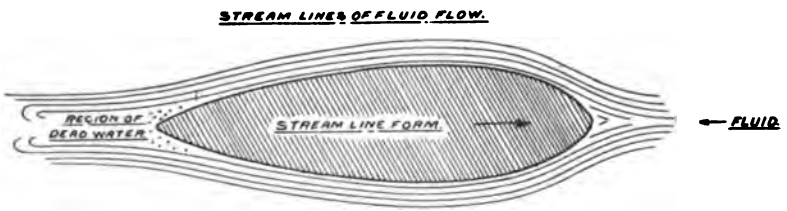

Fig. 1.

Diagram illustrating the nature of the fluid flow round a streamline form in motion. The region of dead water behind the tail end of the streamline form is indicated.

be expected to exist between the resistance of a stream-line form and the face resistance of its sectional area.

Thus, in the example previously cited, a ratio of resistances of 300 : 1 was established in respect to single-face and double flat-surface resistance. In a stream-line body, only the outside surface is in contact with the air, but if, as has been suggested, its coefficient of resistance is twice the flat surface, then the above ratio of 300 : 1 may be allowed to stand. We thus obtain:

$$\text{Ratio of areas} = \frac{\text{Surface}}{\text{section}} = 4\frac{L}{D}$$

$$\text{Ratio of resistances } \frac{\text{unit surface}}{\text{unit section}} = 300$$

$$\text{Ratio of resistances } \frac{\text{whole surface}}{\text{whole section}} = \frac{4L}{300D}$$

Or, for a particular case in which the ratio of length to diameter is, for example, 7.5, the resistance of a stream-line body might be expected to be about one tenth the resistance of its cross sectional area exposed as a flat plate.

Actually, the resistances of stream-line bodies are of this order of magnitude, although varying widely among themselves. The best results thus far recorded at the National Physical Laboratory show a particular form with a ratio of length to diameter of 4 : 1, which offered 0.07 times the resistance of its cross sectional area regarded as a flat plate.

The above particular citations, incomplete as they are, suffice to indicate the enormous importance of the subject—an importance that has already become a predominating influence where modern aeroplane design is based on scientific research. In the aeroplane of today, every effort is made to profit by these lessons. The engine, the pilot, and the passenger are placed in tandem, and, as far as possible, the body of the machine is streamlined round them. Most of the struts in biplane construction are made of timber and are rough-turned to stream-line section on a copying lathe, being afterwards finished to gauge size on a sand belt. With steel tubes, a few oval sections are already on the market and are suitable for some purposes, but in many cases circular-section tubes* are fitted with light aluminum or wooden fairings, in order to convert their exterior surface into streamline form.

Leaving aside the question of stability, which must necessarily be discussed separately, it is in the above-mentioned direction that aeroplane design has shown the most notable improvement of late years. Success in this department really resolves itself into a capacity for taking infinite pains, and certainly the Royal Aircraft Factory, where this class of design has predominated, has shown great consistency of purpose in its efforts to reduce the resistance of its machines.

National Research and Private Enterprise.

At this point, it may perhaps be best if I digress for a moment in order to explain the position of the Royal Aircraft Factory and its importance to the country at the present time.

For the past six years, the official development of scientific aeronautics in Great Britain has been directed by an Advisory Committee appointed by the Prime Minister. Its President is Lord Rayleigh, its Chairman is Dr. Glazebrook. The formation

* The circular section itself offers a very high resistance, owing to the surface of discontinuity commencing practically at the full diameter.

of this Committee was an accomplishment for which the Government deserves much credit from the world at large, for the Technical Reports of this Committee constitute an unrivalled source of reliable information that might otherwise have taken half a century or more to have seen the light in its present lucid form.

The research itself, which the Advisory Committee directs, takes place at the National Physical Laboratory and at the Royal Aircraft Factory. In the Aeronautics Branch of the National Physical Laboratory the experiments are all conducted on small scale models. At the R. A. F.—an institution evolved from the old Military Balloon Factory, and now under civilian control, with Mr. Mervyn O'Gorman, C. B., as the Superintendent—the experiments are life size. Besides these two Experimental Departments, which are given over to aeronautical research, there is the invaluable work in meteorology, which is conducted partly under the direct control of the Committee and partly under the direction of the Meteorological Office. The reports of this section are also embodied in the annual Blue Books.

It must not be supposed for a moment that the development of private enterprise in aeroplane construction, nor the practice of the art of flying has waited upon the work of the Advisory Committee, the N. P. L., or the R. A. F. On the contrary, it is to such sportsmen as the Wrights, in America; Farman, Delagrange and Bleriot in France, A. V. Roe and S. F. Cody in England that the flying machine first learned to walk, so to speak, in its proper element.* They had few text-books†—and they wrote none.

* For the history of the development of the aeroplane and the work of the pioneers, see "Aviation" (Methuen & Co., London), p. 172, et seq.

For a fuller account of the work of Cayley, Wenham, Walker, Lana, Pilcher, Stringfellow, and Borelli, see "The Aeronautical Classics" published by the Aeronautical Society, 11 Adam Street, Adelphi.

(N. B.—The Aeronautical Society of Great Britain was founded in 1866 and is the oldest institution in the world devoted to this science. For an account of its formation, see "Aviation", p. 199.)

For original articles on their own work by Lilienthal, Chanute, Maxim, Pilcher, and Langley, see Means' "Epitome of the Aeronautical Annual" published by W. B. Clarke & Co., 23 Tremont Street, Boston, Mass., U. S. A.

† The earliest publication that can claim to be regarded as a really scientific text-book was Lanchester's "Aerial Flight", the first volume of which, called "Aerodynamics", appeared in 1907, and is only beginning today to be appreciated in the way it deserves.

The Work of the Wings.

I will now revert to the subject of aeroplane resistance, and discuss as briefly as may be the part of it that is due to the wings. Hitherto, I have referred only to the resistances of struts, wires, body, etc., in short, to the many and various constructional features inseparable from the design of a useful machine. These, nevertheless, play no part in the wing structure proper. In the aggregate, these various resistances are commonly referred to as the "body resistance". No matter what their precise nature, they all increase as the square of the speed,† and the significance of reducing that due to even one item becomes, therefore, immensely important with machines intended for high velocity. When aeroplanes were designed to fly at about 40 miles an hour, body resistance was not of very much account. Pilots sat in exposed positions and struts were of any convenient section. Now, however, when they are expected to fly at 80 miles an hour or more, the principles making for the reduction of resistance need to be applied to the very smallest item.

The situation presented by the wings of an aeroplane is altogether different; their resistance is roughly independent of speed. By this I do not mean that one and the same wing offers the same resistance at all speeds, but that the resistance to the support of a given load could be the same at all speeds if the wings were suitably designed for their respective speeds in the first instance.‡

The nature of the resistance of a wing in flight is itself of two kinds. In the first place, its lifting effort is derived from the reaction of the stratum of air that is accelerated downwards as the wing passes through the atmosphere; and, in the second place, there is the frictional resistance of the air rubbing on the wing surface.

Flying at a constant attitude, as represented by the angle of its chord to the relative wind, the lift of any given wing increases as the square of the speed;* consequently, for a given

† Approximately. See previous notes on the "v^2" law, and the laws of dynamical similarity.

‡ See Lanchester's "Aerodynamics", 3rd edition, section 166.

* For convenience, I ignore the inaccuracy of the "v^2" law, as it is sufficiently true to cover moderate speed ranges without serious error, and its assumption makes for simplicity of expression in the text.

total load to be supported, the wing area required diminishes as the square of the speed. That is to say, a machine designed to fly twice as fast as another will carry the same load on a wing area of one-quarter the extent: Vice versa, if the speed of one machine is half that of another, it will need four times the wing area for its support. In each case the weight is, of course, the whole load, including machine, pilot, and fuel.

So far as this aerodynamic resistance is concerned, it is directly proportional to the intensity of the lift per unit surface, and, therefore, remains constant for a constant load, if the wing area is adjusted to the square of the speed. Similarly, in the case of the frictional resistance, this increases roughly as the square, and therefore remains nearly constant if the wing area is adjusted to the square of the speed. On these premises the combined resistances of the wing remain constant, but actually the difference between Zahm's law for skin friction and the "v^2" law is, it will be noticed, appreciably in favour of fast flight, and the same remark also applies to the effects of high speed on the lift coefficient.

There is another way of adjusting the lift of a wing to suit its flight speed, which is by altering its attitude. When the angle is steeper, the lift is increased; but, by this method, the resistance with a constant load varies widely.† (See Fig. 2.)

† In order that the results of various investigators should readily be comparable at a glance, it is desirable to express the aerodynamic forces, such as lift and resistance, in terms of an absolute coefficient, the numerical value of which is unaffected by the system of units employed. Thus, assuming the "v^2" law, the fundamental equation for the lift and the resistance of wings is:

$$\text{Force} = \text{Constant} \times \text{density} \times \text{area} \times \text{velocity}^2$$
$$F = C \times \rho \times A \times v^2$$

It has been shown that the value for C for flat plates ranges from 0.507 to 0.62. For wings, the lift coefficient ranges from zero to about 0.6, according to the angle of incidence. The maximum lift occurs at an angle depending on the profile of the section, but is commonly in the neighbourhood of 12 degrees.

At this angle all wing sections experience high resistance, and aeroplanes are, therefore, designed for a much finer flight angle. In the Military Aeroplane Trials, 1912, the lift coefficients calculated from the results (See "Aviation", p. 308) ranged from 0.19 to 0.335.

For converting lift coefficients into pressure in lbs./sq. ft., multiply by .00236 v^2, when v is in ft./secs.

It was pointed out by Lanchester* that since the aerodynamic resistance increases with the angle, whereas the frictional resistance is independent thereof, there must be a particular relationship between these two factors making for greatest

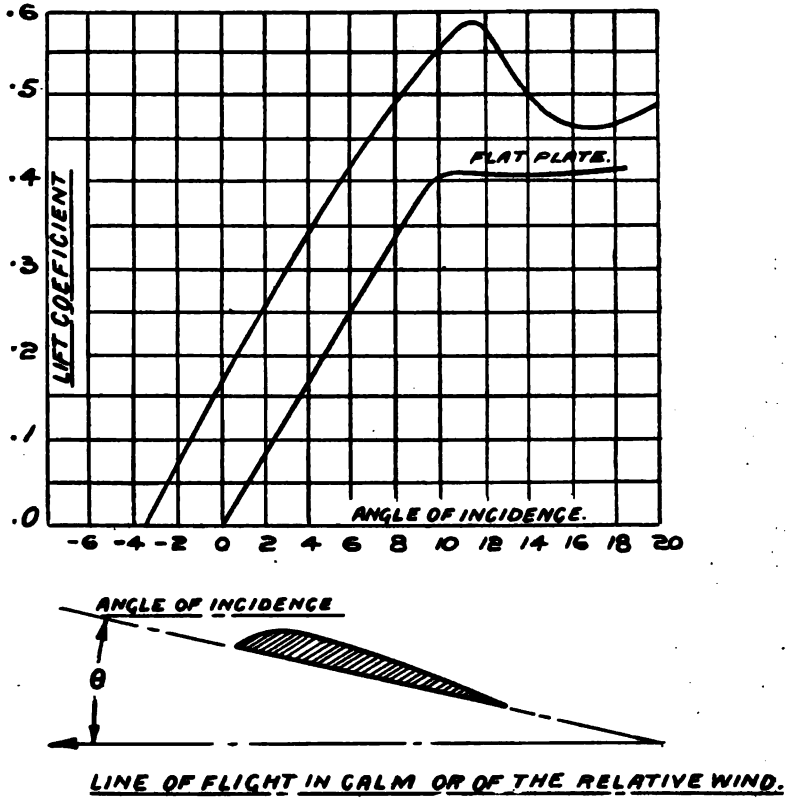

Fig. 2.

Diagram illustrating a typical example of the relationship between the lift of an aeroplane wing and the angle at which it flies. The sudden drop in the lift after the critical angle is very pronounced in the particular wing section from which the curve has been plotted. It is almost absent in the case of a flat plate. In order to convert the lift coefficient into pressure in lbs. per sq. foot, multiply by .0051 V^2, where V is the flight speed in miles per hour.

economy. He also showed that this angle of least resistance obtains when the aerodynamic resistance is equal to the frictional resistance. Consequently, for a given medium (e. g., the atmos-

* See "Aerodynamics", 3rd edition, section 163.

phere) and a given surface (e. g., varnished fabric) there is, theoretically, a common angle of least resistance representing the attitude in which all wings might be set for greatest economy.†

The Regulation of Speed.

The particular interest of this deduction has proved to be rather academic than practical, inasmuch as aeroplanes must be designed to be capable of a wide speed range for the sake of safe landing, and no better method of regulating speed in flight has yet been devised than by altering the attitude of the machine by means of the elevator. This organ of control is commonly in the form of a hinged flap extension to the tail.

When the elevator is moved, the effect is to increase or decrease the air pressure on the tail, which disturbs the longitudinal balance of the machine and causes the aeroplane to take up a new attitude of equilibrium. This bodily tilting of the machine results, of course, in altering the angle of the wings to the relative wind, so that their lifting effort at any given speed is increased or decreased, as the case may be.

If it is desired to fly more slowly, the pilot adjusts the elevator so as to depress the tail, and thereby increase the angle of the wings. When this tail-down attitude is very pronounced, the machine is said to be flying *cabré*, and is in a state that experience, also theory, shows to be fraught with grave danger.

This is due to the fact that the characteristic increase of lift with increase of angle suddenly ceases when the angle attains 12°, or thereabouts, and is followed more or less immediately by rapid decrease of lift if the angle of the wing is still further increased. (See Fig. 2.) The precise value of this critical angle depends on the profile of the wing section and must be determined experimentally.*

Generally speaking, the drop in lift beyond the critical angle is more pronounced with wings of great camber than with those that are relatively flat. In the flat plate, indeed, it is

† Experiments on a range of wing sections tested at the N. P. L. showed a common attitude of least resistance in the neighbourhood of 4°, but the ratio of the lift to the resistance at this angle varied from 10 to nearly 15, according to the section. For a particular flat plate, the lift/resistance ratio was found to be about 12.

* For diagrams, see the "Technical Report of the Advisory Committee", Vol. 1911-12, p. 60.

scarcely noticeable, although the cessation of the increase occurs with equal abruptness.

It is very evident that a pilot may readily precipitate an accident if he tries to force his machine to fly *cabré*, and not a few deaths have been due to this cause. It is, indeed, mainly in

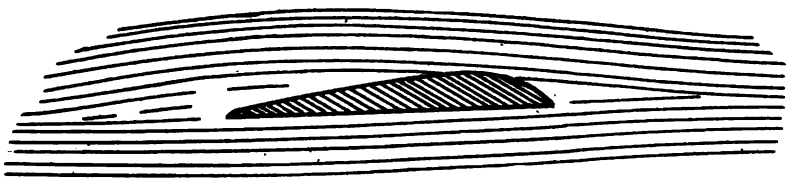

CHARACTERISTIC FLOW AT FINE ANGLE.

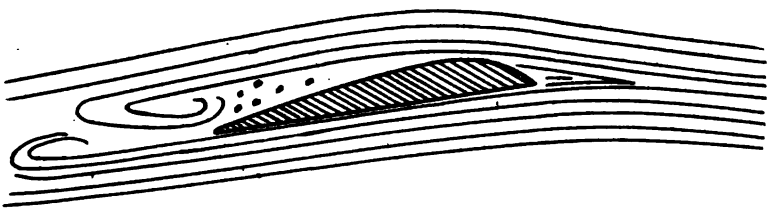

CHARACTERISTIC FLOW AT STEEP ANGLE

Fig. 3.

Diagram illustrating examples of the characteristic fluid flow round aeroplane wing sections. These diagrams are drawn from photographs appearing in the "Technical Report of the Advisory Committee". They naturally cannot convey such a clear idea of the nature of the flow as is conveyed by a photograph. The breakdown of the streamline flow, when the wing is at a steep angle of incidence, is the important point illustrated by the above comparison.

order to avoid this class of accident that careful pilots never leave the precincts of the flying ground before they have satisfied themselves, by climbing to several hundred feet altitude, that the engine is in good condition. Flying at a great height is, in any case, the best safeguard against being caught out in emergency.

If the engine power weakens, and finally ceases, it is inevitable that the pilot must point the nose of his machine earthwards for a dive, in order to recover his flight speed by the assistance of gravity. This is, obviously, a dangerous manoeuvre in the vicinity of the earth. Moreover, a pilot flying at a great height has a wider choice of landing ground.

The cause of the sudden change in the characteristic lift of aeroplane wings is due to a more or less complete breakdown of the regular air flow along the top of the wing surface. At small angles of incidence, the flow is streamline in character and conforms to the wing profile. At steeper attitudes, the wing acts more as a barrier, and the main stream breaks away from the wing and thereby forms what is called a surface of discontinuity. Between the main flow of the air and the surface of the wing, a region of dead-water is thus established. (See Fig. 3.)

This also gives rise to a sudden increase in resistance, so that if the act of flying *cabré* is due, as is usually the case, to a faulty engine, the danger is speedily augmented.

The cause of the increase in resistance is equally due to the breakdown in the air flow over the wing and the spreading of the region of dead-water over the upper surface. Being comparatively quiescent, this region is at a practically uniform pressure, and destroys the most important quality possessed by the cambered wing, viz., the inequality of its pressure distribution.

The Virtue of a Cambered Wing.

Cambered wings are used instead of flat plates because they are more "efficient";* that is to say, because the ratio of their lift to their resistance is higher than obtains for a flat plate. The reason for this virtue is to be found in the inequality of the pressure distribution, notably over the upper surface.† (See Fig. 4.)

A remarkable fact associated with this distribution is the

* It is difficult to find a better word than "efficiency", although its use is not justified technically.

† For charts of pressure distribution, see "Technical Report of the Advisory Committee for Aeronautics", Vol. 1911-12, p. 60; also Eiffel's "Resistance de l'Air". Particular attention is also directed to the conclusions in the "Technical Report", Vol. 1912-13, p. 101, where it is shown that a remarkable difference in efficiency obtains in the centre and at the tips of a wing.

high intensity of the negative pressure (suction) immediately over the front edge of the wing when it actually faces the wind, and should, therefore, apparently be subjected to a positive force of direct impact.

Owing, however, to the existence of what Lanchester describes as the "cyclic upcurrent",‡ the relative wind always approaches the wing with an upward trend, so that the dipping

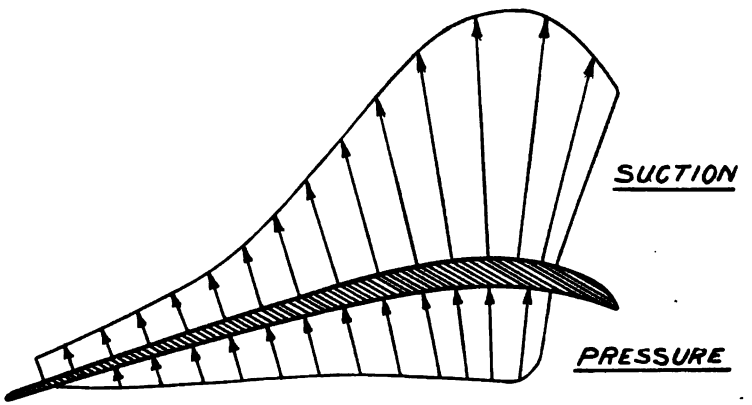

GRAPHIC ILLUSTRATION OF A TYPICAL DISTRIBUTION OF PRESSURE OVER A WING SECTION AT ABOUT SIX DEGREES ANGLE OF INCIDENCE

Fig. 4.

Diagrammatic illustration of the distribution of pressure along the chord of a wing. This distribution varies very much with the angle and the section of the wing. An important point illustrated above is the forward tilt of the suction vectors immediately over the front edge of the wing. These give rise to an up-wind component that materially reduces the resistance to flight and makes the cambered wing section much more "efficient" than a flat plate.

front edge of the cambered section is actually on the lee side and receives the full benefit of a very intense suction that much exceeds the force exerted elsewhere.

The supreme significance of this phenomenon is at once apparent. Although in the lee of the local air flow, the dipping front edge of the wing still faces up wind, and any suction on it is bound to exert a propelling force in the direction of flight.

‡ For an explanation of the nature of this phenomenon, see Lanchester's "Aerodynamics", section 110.

Where the pressure distribution is uniform (as it becomes beyond the critical angle), this up-wind component, which Lilienthal called the "tangental"** would be neutralized by the down-stream drag on the trailing portion of the wing; but at small angles of incidence the negative pressure predominates on the front edge, and the cambered wing is consequently remarkably meritorious. (See Fig. 5.)

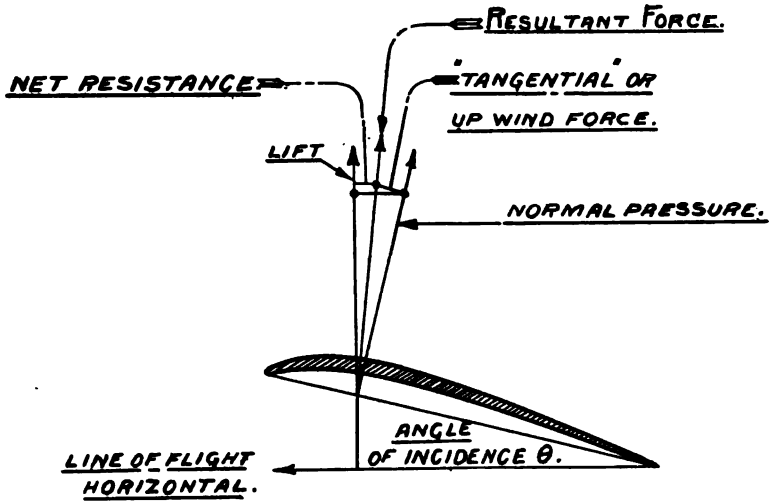

Fig. 5.

Vector diagram illustrating the effect of the up-wind component in reducing the resistance of a cambered wing section. A pressure P, normal to the chord, would give rise to a resistance P sin. θ, but the existence of the up-wind tangental causes the resultant to be inclined forward from the normal, and so reduces the net resistance. This diagram should be compared with Fig. 4, as an alternative method of illustrating the same principle.

Whether it be a flat plate or a cambered wing, however, it is always the upper surface that contributes the greater part of the lifting effort. In general, it may be said that wing sections, as used on aeroplanes of today, derive three-quarters of their lift from the suction on their upper surface. (See Fig. 6.) Arising out of this, it follows that alterations to the lower surface profiles are of relatively small importance; indeed, experiments have shown that the lower surface may be flat without serious detri-

** See Lilienthal's chapter on Artificial Flight in Moedebeck's "Pocket Book of Aeronautics", p. 287. (Whittaker & Co.)

ment to the lift coefficient. There is a great practical advantage in this fact, inasmuch as it enables sufficiently deep spars to be incorporated in the wing structure without destroying the aerodynamic virtues of the section.

Just as in the case of the body, so in the case of the wing has an aeroplane designer every reason to study the results of

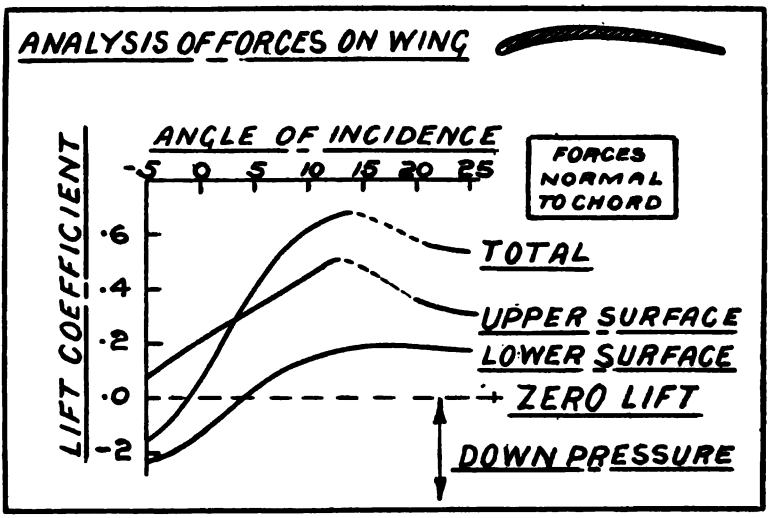

Fig. 6.

Diagram constituting an analysis of the forces on a wing in flight, showing the relationship of the suction on the upper surface and the pressure on the lower surface throughout a range of angles. It will be noticed that there is a down pressure (suction) on the lower surface at angles of incidence less than about +5°, whereas the upper surface continues to lift when the angle of incidence is as much as —5°, i. e., below the horizontal. These numerical values will vary widely according to the wing section. The graphs given above are taken from the "Technical Report of the Advisory Committee", and relate only to one particular wing section.

experimental research. Either he must adhere closely to existing forms, or he must institute an elaborate system of experimental investigation in order to establish his data. Such research as is here implied is ordinarily beyond the means of a private firm, and the work of such laboratories as those of the N. P. L.* and Eiffel is therefore of invaluable service to general progress.

* The research of the N. P. L. on Aeronautics is published in the "Technical Report of the Advisory Committee for Aeronautics" (Wyman & Sons, Fetter Lane, London, E. C.). The research of M. Eiffel's laboratories

Having now scanned the chief features of aeroplane resistance, it may be of interest to give a few numerical values, in order to fix ideas, before passing on to an equally brief consideration of the question of stability.

Taking first the question of wing resistance, this is commonly in the order of 1 lb. for every 12 or 14 lbs. supported in flight; but, according to Lanchester,† "if it is found practicable to employ a really high aspect ratio,‡ there is every reason to suppose that a resistance coefficient as low as 6%, or even 5%, may prove to be attainable". In his "James Forrest" Lecture to the Institution of Civil Engineers last year, Mr. Lanchester expresses the aggregate body resistance as an equivalent flat surface measuring, in the case of modern machines, about 5 sq. ft. in area. His remarks on the future are as follows:

"If we take an aerofoil coefficient of 7 per cent, and a curve representing 3 square feet equivalent normal plane, we find that at 80 miles per hour the gliding angle, or the resistance coefficient, should be approximately 12 per cent, and at 60 miles per hour 10 per cent; I believe this figure to be in sight, though it may not yet have been actually reached" . . . . .

"If we try, in the light of present data, to look into the future, it seems probable that the limiting gliding angle, or, rather, the minimum total coefficient of resistance may even be materially less than 1 in 10; thus, if it is found possible, in spite of structural difficulties to obtain in an actual machine results equal to those obtained in wind-channel model tests, namely, a coefficient of resistance for the aerofoil approximating to 5 per cent, and if the body area equivalent, for a machine of 1200 lbs. gross weight, can eventually be reduced to 2 square feet, a total coefficient of resistance as low as 8 per cent may prove well

is published in Eiffel's "Resistance de l'Air" (English translation, Houghton Mifflin Co.). For the records of M. Riabouchinsky's research, see "Le Bulletin de l'Institute Aerodynamique de Koutchino", published by the Institution at Koutchino. The records of Prof. Prandtl's research at the Göttingen model-testing institution are generally published in the German periodical "Zeit für Flugtechnic und Motorluftschiffahrt".

† See Lanchester on "The Flying Machine from an Engineering Point of View", Proceedings of the Institution of Civil Engineers, Vol. CXCVIII, 1913-14.

‡ Ratio of span to chord in a wing.

within reach. Whether the sacrifice necessary in order to achieve such results in practice would be justified, the future alone can decide. The solution of an engineering problem is always to some degree a matter of compromise, and it would be rash to suggest that in the case of the flying-machine there are not considerations of sufficient importance to render it inadvisable to run after the last 1 per cent reduction in tractive effort".

THE POWER REQUIRED FOR FLIGHT.

Taking the case of any particular aeroplane already constructed, it is apparent that the nature of the resistances it encounters in flight renders it necessary to plot a graph in order fully to record the conditions. Thus, on the one hand, there will be the resistance of the wings, which will at first decrease with increasing speed as the attitude approaches the speed of least resistance, and afterwards will increase again. On the other hand, there will be the body resistance, which increases rapidly with the speed from first to last. These two resistances form separate and intersecting graphs on the resistance chart and must be combined to form the total resistance. If the thrust available for the propeller is superimposed, a characteristic chart is thereby constructed, which forms a key to the anticipated speed and climbing qualities of the machine. Graphs of this character were introduced by the Royal Aircraft Factory to express the anticipated and actual results of their machines. (See Fig. 7.)

The two points of intersection between the propeller thrust and aeroplane resistance curves indicate the speed range, and the lower of these two limits is that in which the machine assumes the *cabré* attitude that has been described as so potentially dangerous. At any given speed on the chart the reserve thrust is indicated by that part of the ordinate, measured to scale, which is intercepted by the two curves.

The product of this thrust by the flight speed gives the reserve power available for acceleration. If the attitude of the machine is adjusted to a path of ascent, so that the flight speed through the air remains constant, this reserve power may be utilised for climbing, and the rate of vertical ascent can be

estimated from the reserve power available and the total weight to be lifted.

From a mere consideration of two facts, viz., that a machine must be able to fly slowly (40 m.p.h. or thereabouts) in order to alight with safety on indifferent ground and when piloted with

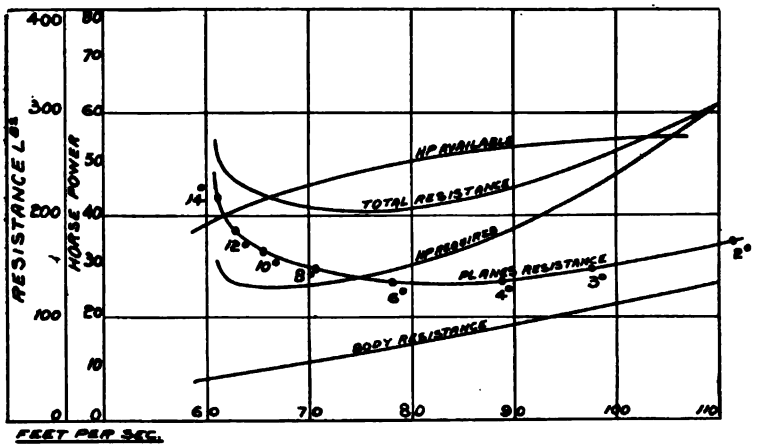

Fig. 7.

Chart serving as an analysis, or synthesis, of aeroplane resistances. The resistance of the body, which comprises also the struts, wires, landing carriage, etc. is shown by its graph to increase rapidly with the speed. The resistance of the wings is shown by its graph to decrease rapidly until an angle of about 5° is reached, beyond which point the resistance increases again as the angle becomes finer. The sum of the two resistances produces the total resistance curve, which is seen to have a minimum value at about 75 m.p.h. The product of the total resistance by the speed produces the graph of h.p. required. The graph of h.p. available at the propeller is superimposed on the chart from known data. The ordinates intercepted between the two h.p. curves, measured to scale, gives the reserve power available for acceleration or climbing. The above chart is for a particular aeroplane and is taken from the "Technical Report of the Advisory Committee". The method, however, can be applied to all machines and is regularly employed at the Royal Aircraft Factory. Particular attention is drawn to the obvious danger of forcing the machine to fly very slowly at very steep angles of incidence. The proximity of the two h.p. curves on the left of the diagram illustrates the absence of reserve power in case of emergency, and Figs. 2 and 6 show that the wing may suddenly pass the critical angle and so lose its lift in this region.

very moderate skill, and yet must be able to fly fast in order to make headway through a strong wind or to escape a superior force of its enemy in war, it is apparent that a wide speed range is of fundamental importance in any generally useful aeroplane. This, in turn, as can be seen from the characteristic chart of

aeroplane resistance, calls for a reserve of power and accounts for the fact that the engines have steadily tended towards larger sizes, especially of late years.

If we take an imaginary case of an aeroplane weighing 1750 lbs.* experiencing a resistance of 1 in 7 at 60 m.p.h., the power necessarily expended on level flight is 40 h.p. If the power available at the propeller is 60 h.p., the reserve at 60 m.p.h. is 20 h.p. and the estimated rate of climbing is nearly 380 ft./min. In the military aeroplane trials of 1912,† the climbing rate ranged from 105 to 365 ft./min. The present climbing value of one of the British Government's aeroplanes‡ is from 400 to 450 ft./min.**

Prior to the war, one of the most used engines was the 80 h.p. Gnome, which develops 64 h.p. on the brake. It is now less widely used, owing to the growing demand for engines capable of giving at least 90 h.p. effectively and continuously. In the near future, engines of over 200 h.p. will undoubtedly be in use on the larger types of aircraft.

As most people are aware, the aeroplane motor, although similar to the motor-car engine in its fundamental principles, is, as a rule, of a very different description. In the early days it was not unknown for sportsmen to take engines out of their cars in order to equip their aeroplanes, but the engine in such cases continued to evince a distinct preference for the support of terra firma. Exigencies of weight forced designers of aeroplanes to seek lighter motors, and the Wrights, it will be remembered, had to build their own engine for their very first machine. Many attempts to produce a satisfactory aeroplane engine were made in different quarters before the Gnome rotary motor was produced. The advent of this remarkable machine gave a great stimulus to practical flying, but its influence on competitive engine design seems rather to have dampened than inspired prog-

* The weights of aeroplanes in the Military Aeroplane Trials, 1912, varied from 1481 lbs. to 2680 lbs. with pilot and 4½ hours' fuel and oil.

† For an analysis of these trials see "Aviation" (Methuen & Co.), p. 272.

‡ See "Technical Report of the Advisory Committee for Aeronautics", 1912-13, p. 248.

** One of the R. A. F. experimental machines climbed 900 feet in one minute (see "Technical Report", 1912-13, p. 265).

ress. Being a type apart, and having a quality of lightness only readily to be attained by following the basic principles of its design, its success rapidly developed into a virtual monopoly that was somewhat deterrent to new enterprise. Neither its lack of economy in fuel and oil consumption nor its need for frequent attention has much militated against its utility under flying conditions as these have existed hitherto, but it is quite certain that aeroplane engines of the near future must attain in these respects more nearly to the standard of those employed on automobiles. Indeed, fuel and oil economy rapidly attain a greater importance than the actual weight of the engine when long duration flights are considered.

CONTROL AND STABILITY.

The Organs of Direction and Control.

Thus far we have only considered the aeroplane as a simple machine similar in its principles of economy to any other power-propelled vehicle or craft. There remains, however, the far greater problem of its balance and direction in the air. This problem of aeroplane stability is one of much complexity, far beyond the scope of any review such as this even properly to introduce, and I think it will be the best plan if I enumerate the common organs of control that are to be found on any modern aeroplane, and make such remarks and references relating to the principles underlying them as seem appropriate to serve both the purpose of explaining their action and of directing the student to sources of further information.

When the Wrights* built their first glider in 1900, they employed two organs of control—an elevator and the "warp". The elevator was a horizontally disposed rudder† pivotted on an outrigger frame projecting in front of the wings. Its function was to correct pitching by adjusting the attitude of the machine in flight. On modern machines, the elevator is commonly a hinged flap extension to the tail plane. It is invariably oper-

* For a summary of the work of Wrights, see "Aviation", Chap. XII. For Wilbur Wright's own account of his earlier experiments, see the Transactions of the American Society of Western Engineers.

† The term horizontal rudder was originally used as the name of this organ of control, but gave rise to much confusion of thought.

ated by means of a lever that is moved to and fro; the rearward movement of the lever causing the machine to fly *cabré* (tail down) and vice versa. Inasmuch as each attitude of the machine requires a different velocity to maintain level flight, the elevator lever may be regarded as the change-speed control in somewhat the same sense that the change-speed lever is used on an automobile. The term "elevator" is derived from the use of this organ in adjusting the attitude of the machine for climbing; it has no power in itself, of course, to make the machine ascend, for that manoeuvre can only be caused by exerting a surplus driving force.

Ascent and descent, in short, are controlled by the manipulation of the engine throttle; the elevator merely adjusts the balance of the machine into the attitude of longitudinal equilibrium proper to its speed and direction. Without reserve power, it is impossible to climb continuously, but the machine may be jerked upwards a few feet by momentum and at the expense of its speed if the elevator is suddenly tilted.

On the original Wright glider, the wing structure was contrived so that the surfaces could be warped out of their proper shape and thereby given a helicoidal twist, such that the angle of one wing tip became finer and that of the other greater than the normal attitude.

As a consequence of this, the lifting effort of the wing extremities also lacked balance, and this difference in pressure was employed for correcting any tendency of the machine to roll, and also for the purpose of steering. The presence of a rudder came later, when the Wrights found by experience that the warp alone gave unsatisfactory results. Used in conjunction with the rudder, however, it became possible to balance the machine without yawing from the intended flight path, and the improvement effected by this combination was so marked that the Wrights covered its use by a patent* that seems to have established itself in the enviable position of a "master" claim.

As a rule, the rudder is operated by foot-pressure on a

* For a summary of the Wright Patent Litigation, see "Flight", March 15, 1913. Also "Aviation", p. 289. At the outbreak of war, a test case against the British Government was about to ensue, but was settled out of court in favour of the plaintiffs.

pivotted bar, while the warp is manipulated by a hand wheel that is often mounted on the top of the elevator lever. The pilot is thus an essential link in the combination.

Where the warp is used without the rudder, the unequal resistances of the wing tips cause yawing, which it is the purpose of the rudder to correct. If the rudder is used alone for steering, the machine is liable to drift, for it has so little natural vertical surface that its ability to change its direction depends almost entirely on "banking", that is to say on the machine rolling over sideways sufficiently to tilt the wing pressure inwards towards the centre of the turning circle. Banking is, of course, promoted by the use of the rudder, inasmuch as the mere yawing of the machine accelerates one wing tip and so gives rise to a banking couple. In some machines this action is ordinarily sufficient; in others the combined use of the warp and the rudder may be essential for steering a course.

From a consideration of the elementary triangle of forces that obtains when an aeroplane is banked for steering (see Fig. 8), it is apparent that increased power must be expended to maintain level flight; if the necessary reserve is not available, the machine must descend while turning, which at once opens up a source of potential danger when it is realised how easily a pilot may get trapped over water and bad ground when flying low with inadequate engine power.†

Stability.

Thus far I have confined myself to the pilot's control of the aeroplane, and have ignored entirely the machine's control of itself, which is properly to be discussed under the heading of stability. It is obvious that aeroplanes in flight must, even in the finest weather, constantly be subjected to disturbances. If, when disturbed, they tend automatically to recover their equilibrium, they are said to be stable; and, vice versa, instability implies that the disturbance augments itself until the aeroplane comes to grief.

† For accounts of some of the most noteworthy accidents, see "Aviation", Chap. XVII. In England, accidents are investigated by a special Committee of the Royal Aero Club. In 1912, the Government appointed a Departmental Committee to investigate certain accidents that had occurred to monoplanes, and the report can be obtained from H. M. Stationery Office.

There has never been any question as to the undesirability of designing an unstable aeroplane, but there has been considerable difference of opinion as to the degree to which it should be stable. Stability is, after all, mainly a problem of degree when it comes to a question of practical design, and, contrary to the belief of most inventors of stability devices, the stability of the more successful flying machines of today is very nearly neutral. At one time it was supposed that an aeroplane could not possibly be too stable—but this point of view disregarded the vital

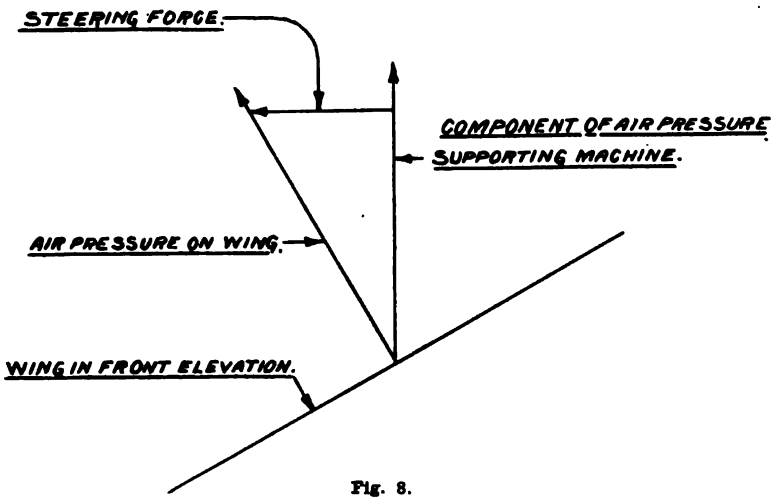

Fig. 8.

Diagram illustrating how a steering force is obtained by banking the aeroplane. An aeroplane has very little natural vertical surface to prevent drift, and steering is, therefore, accomplished by banking the wings. Banking results in a reduction of the vertical supporting force, and the aeroplane must descend while turning, unless there is sufficient reserve power (See Fig. 7) to increase the speed or to enable the machine to fly at a steeper angle.

necessity of a responsive control. A very strong tendency to recover itself, or to resist disturbance, may be a desirable enough quality when the disturbance is accidental, but it becomes sheer mulishness when the disturbance is a voluntary act of control. Responsiveness to the pilot's manipulation of the levers is a quality of very great importance in an aeroplane, and it is opposed to the existence of strong self-righting tendencies. In short, the verdict of the practical flier is in favour of a machine that is nearly neutral—stable, but not too much so.

It redounds very much to the pluck and perseverance of the pioneers that the problem of producing a flyable aeroplane was solved first by practice, but it is also to the credit of the mathematicians that it should also have succumbed to theoretical analysis. From Leonardo da Vinci onwards there has hardly been a generation that did not produce its inventors of flying machines, but it was not until our own time that any real attempt was made to ride the air. Very few among the earlier thinkers seem to have grasped the possibility of gaining actual flying experience in the air by means of a very simple apparatus—the glider. For the most part, they were all concerned with the impossibility of making a suitable engine, and failed to appreciate that nature herself could provide a suitable prime mover in the force of gravity.

It is with the name of Lilienthal that the introduction of the art of gliding is invariably associated, on account of the very wide influence of his practical work,* but chronological priority appears to rest with Prof. J. J. Montgomery of California, who made gliding experiments in 1884.†

The practice of gliding, that is to say the use of wings as a toboggan for sailing downhill through the air, brought the pilot into direct realisation of the difficulty of balance and direction, and this led, by degrees, to the evolution of a moderately safe machine. Many lives were lost‡ in the process, but the thought of danger availed little against the enthusiasm of those who were determined to learn to fly, and the advice of the mathematician who advised delay, pending the symbolical solution of the problem, was laughed to scorn.

Nevertheless, the scientific aspect is already assuming a very considerable importance in modern aeroplane design, and this is largely owing to the very painstaking labours of Prof. Bryan and Mr. Harper, who have worked out a basic method for the

* Lilienthal was a student of aviation from boyhood, but only commenced his gliding experiments in 1881. His work inspired Pilcher in England, and Chanute, Herring, and the Wrights in America. For a summary of his work, see "Aviation", Chap. XI.

† For an account of Prof. Montgomery's work, see Lougheed's "Vehicles of the Air", p. 138.

‡ Lilienthal and Pilcher were both killed by accidents to their gliders.

treatment of stability problems in general,* and to the late Edward T. Busk,† who was responsible for the stability calculations of the aeroplanes designed at the Royal Aircraft Factory.

As might be expected, the process scarcely represents mathematics in its most elementary form, and hardly lends itself to any brief explanation.

An aeroplane in flight has six degrees of freedom. It can move longitudinally, sideways, or vertically: it can also rotate about any one of these axes of direct motion.

A partial rotation about the transverse axis is called "pitching"; if about the longitudinal axis, it is called "rolling"; and if about the vertical axis, it is called "yawing". The situation is further complicated from the fact that rolling will produce yawing and vice versa—the general stability of the machine is thus a question of some complexity.

When a machine pitches, the oscillation will die out of its own accord if the tail is in proper relationship to the wings. In general, longitudinal stability depends on the existence of a dihedral angle‡ between the wings and the tail. Thus, in the elementary case of flat surfaces, the wings must be set at a steeper angle of incidence than the tail plane to produce longitudinal stability. In Bryan's mathematical treatment of these problems, the existence of stability, or otherwise, is shown qualitatively by the solution of an equation being a positive or negative quantity. In a method of treatment given in Lanchester's "Aerodynamics", the criterion appears in the answer being greater or less than unity. Quantitatively, the problem resolves itself into ascertaining the decrease in the successive maximum ordinates of the oscillation graph.

In describing the organs of control, it has been explained that the elevator forms an extension of the tail. The value of the tail as a stabilising organ is thus a variable quantity, so long as the elevator is under the pilot's control. Skilfully handled,

* See Bryan's "Stability in Aviation", published by Macmillan & Co.

† Although his name was not widely known, Mr. E. T. Busk deserves to be remembered by future students of Aviation for his pioneer work in problems of stability. He was also a brilliant pilot. During the early part of the war, he was flying at Farnborough when his machine caught fire and he was burned to death.

‡ The dihedral must open upwards V-fashion.

the elevator will augment the natural stability of the machine—if used otherwise, it may promote dangerous consequences. The same may, of course, be said of each organ of control in turn.

If some disturbance causes an aeroplane to roll, it will immediately yaw also; for directly the wings become canted over to one side, the air pressure upon them possesses a lateral component that pushes the machine off its former course. It is by this means that most aeroplanes are steered; that is to say, an intentional roll, or bank, is established by warping the wings.

As the machine moves diagonally under the influence of the above lateral force, opposing pressures will be generated on any vertical surfaces that the machine may possess, and these pressures will tend to restore the initial balance, or augment the roll, according as the balance of vertical fin area lies above or below the centre of gravity.

So far as lateral stability is concerned, therefore, the fundamental problem resolves itself into a consideration of the effects produced by various dispositions of vertical fins, and on these lines it has been worked out by Prof. Bryan. In the actual design of a practical aeroplane, it is undesirable to introduce fins merely as stabilisers, and the endeavour is always so to dispose and proportion the essential parts of the machine as to produce the desired fin effect. This, as may be imagined, calls for an uncommon combination of mathematics, practical experience, and sound engineering sense on the part of the designer, to say nothing of an infinite capacity for taking pains. Moreover, the study of meteorology in the form of wind gusts is equally essential, for it is the wind gust that disturbs the balance of the machine.

Having so briefly indicated the mere nature of the stability problem, and having no space for its further perusal, there remains no alternative but to refer in similarly laconic terms to one or two interesting phenomena observed in this field of research. For example, there is the fin effect of the propeller* and the influence of torque on the lateral balance of the machine. This latter force may be balanced by permanent warp or by a spring attached to the warp lever to give the same effect.

* See "The Technical Report of the Advisory Committee", Vol. 1912-13.

Mention was made in a recent paragraph of the need for a study of wind gusts. On some machines a gust will cause the

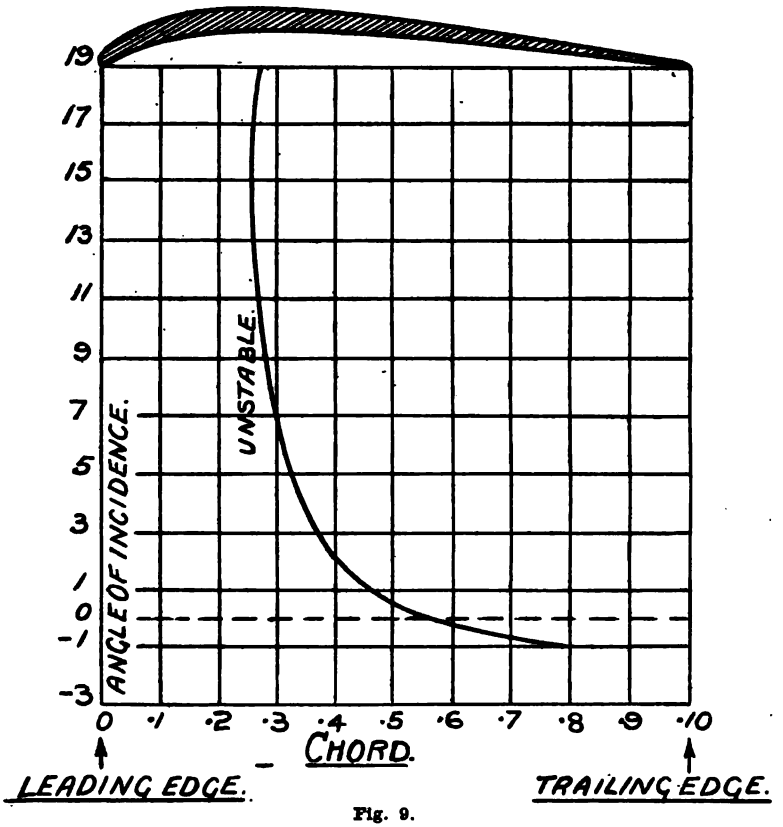

Fig. 9.

Graph illustrating the movement of centre of pressure along the chord of a wing as the angle of incidence is changed. This graph is for a particular wing section only. It will vary considerably with the profile of the section and particularly with the position of the maximum camber. In general, however, all cambered wing sections are inherently unstable, because the centre of pressure moves towards the trailing edge, as the angle of incidence becomes finer, and thus a disturbance tending to reduce the angle, is augmented by the consequences of that reduction. With a flat plate on the contrary, the centre of pressure approaches the leading edge when the angle of incidence decreases, and thus tends to counteract a disturbance and to produce natural stability in the system.

wings to warp automatically and thus to some extent "spill" the wind. At first sight, this might seem to be a most desirable attribute, but, as is usual in such cases, there are two sides to the ques-

tion.† The automatic warping, itself, results from the disposition of the front and back wing spars and the travel of the centre of pressure on the wing when the relative wind changes its trend. In wings constructed to warp, the rear spar is hinged to the body, so that the other extremity can be raised or lowered, and the wing twists about the axis of the fixed front spar when warping takes place. Altering the position of the front spar serves to modify, or to eliminate, the self-warping tendency.

It is the inherent instability* (see Fig. 9) of the cambered wing considered as an aerofoil in isolated flight that is at the root of most of the trouble over aeroplane stability. A flat plate is inherently stable, as experiments with models readily demonstrate.‡ It is also possible to procure an inherently stable cambered section,§ but, unfortunately, such sections as have hitherto been tried have been found to be strikingly "inefficient" from the standpoint of lift-resistance ratio.**

Again, whilst making disjointed remarks on the subject of lateral stability, it is impossible to ignore the interest that attached to the negative wing tips of the Dunne aeroplane. The aim of the designer was to produce a very stable aeroplane, in the sense that it should be steady enough to be useful as a gun platform for fighting in the air. Much interest attached to the performances of the machines constructed on this principle, and much has been written about them,*** but lack of space prevents any discussion of the principles in the present place.

† For comments on the automatic warp, see "The Technical Report of the Advisory Committee", Vol. 1912-13, p. 251.

* See "Aviation", chapter VII. In the "Technical Report of the Advisory Committee", Vol. 1912-13, p. 101, it is pointed out that the centre of pressure moves suddenly to the rear near the wing tip.

‡ See Lanchester's description of his experiments with a ballasted flat plate, to which frequent references are made in his "Aerial Flight".

§ A cambered wing with non-shifting centre of pressure can be produced by using an upturned trailing edge. See Eiffel's later researches. For reference to the Fales stable wing section, see "Aviation", p. 319.

** See "Technical Report", Vol. 1912-13, p. 73.

*** The work of J. W. Dunne is referred to in "Aviation". Articles on negative wing tips and stability appeared in "Flight", Vol. V, p. 34. The theory of the negative wing tip treated mathematically by the Bryan method formed the subject of an article by J. H. Hume Rothery in "Flight", Vol. V, p. 64.

In bringing this very sketchy review of the subject to a conclusion, I am chiefly conscious of a vast field of omissions. A very natural doubt as to the value of the little I have said also casts a depression on my mind, but I reflect with some satisfaction that if any reader of this paper should be curious enough to pursue the more important references that I have given in footnotes, he will find such a mine of interesting information as should cause him readily to forgive the shortcomings of my own text.

Paper No. 224

A DISCUSSION CONCERNING THE THEORY OF SUSTENTATION AND EXPENDITURE OF POWER IN FLIGHT.

By

F. W. LANCHESTER, M. Inst. C. E.
Birmingham, England

PREFACE.

The present communication is, in the main, a resumé and discussion of work and investigations on and relating to the subject of sustentation and the expenditure of power in flight, including an account of work completed and published within the last few months. Attention is particularly given to the controversial points which at present undoubtedly exist and which show there still to be great divergence of view amongst different workers and writers on the subject.

The opening sections of the paper relate to the question of direct resistance, especially as concerning the wing member or aerofoil of a flying machine; this is a matter on which authorities are, so far, by no means in agreement. Whereas the present writer has made it his practice to deal with the direct aerofoil resistance varying approximately as V^2 on the basis of an augmented coefficient of skin friction, there are others, notably members of the staff of the National Physical Laboratory in this country, who contest the validity of this procedure. The subject is one of great subtlety and full of pitfalls. The importance of the matter is due to the fact that the theoretical determination of the conditions of least resistance, and in fact the whole subject of the economics of flight, depends finally on the correct expression of the direct resistance; the present writer based his work (published in 1907) on the hypothesis that the total resistance can be analysed or divided into two portions or component resistances: a direct resistance, which

varies directly as V^2, and termed the x-resistance; and an aerodynamic resistance, which varies inversely as V^2, and termed the y-resistance: it is shown in the work in question that the condition of minimum resistance is that the direct or x-resistance, and the aerodynamic, or y-resistance, are equal to one another. On this basis, together with the computation of direct resistance on the basis of a surface or skin frictional coefficient, a whole superstructure of theory has been established which accords well with experience,—even with the most modern experimental results,—including such facts as the $\frac{P}{V^2}$ relation of least resistance, the approximate constancy of gliding angle for machines designed to different velocities, and the advantage to be derived from high aspect ratio. Not only were the general facts, as above, deduced from the premises stated, but coupled with an application of vortex theory (an application which the author actually employed as long ago as 1894), quantitative values were obtained and tabulated; and these tabulated values, whether for the $\frac{P}{V^2}$ relation, the minimum gliding angle, or for the angles defining the form of camber, cannot be much improved upon even at the present day.

It is to be understood that two distinct points are involved in this question of direct resistance: first, whether it is legitimately to be reckoned as an entity separable from the aerodynamic resistance; second, whether it is legitimately to be assessed, or we may say best assessed, on the basis of a surface or skin-frictional coefficient. It is evident that if the resistance is properly assessed on the basis of "wetted" surface, whether we call it a surface coefficient or a skin-frictional coefficient is merely a question of terminology; were the objection involved merely in the term used, it would be pure pedantry; it is not in the term, it is in the fact.

A second portion of the present paper deals with the author's method of treatment of the dynamics of sustentation, as founded on vortex motion, both as given in his "Aerodynamics" in 1907 and in a quite recent paper read before the Institution of Automobile Engineers of London. This theory was ultilized by the author in the design of his early models, 1894, used mainly for

stability investigations, and formed the subject of a paper presented, in 1897, to the Physical Society of London but rejected by it. A theory having a similar basis has been developed independently by Kutta. In spite of the sluggishness with which this theory has been accepted by English physicists, there is today no question whatever of its truth; it is impossible to begin to explain the facts known to us from experiment without taking vortex motion as the starting point. Those who still persist in denying the truth or utility of the cyclic or vortex theory have nothing to offer in its place, and have to confine themselves, practically speaking, to the mere assertion and classification of the purely empirical results obtained from wind-channel or whirling-arm experiments: experiments which are frequently ill-directed, owing to the lack of a true appreciation of the factors which are essential and those which are unimportant.

The author maintains that even at the present time, when very large sums of money have been expended in experimental apparatus and in experimental work, theory is still the most reliable guide where the problem is other than one of some specific performance. Speaking more generally, the value of existing determinations is many times enhanced when interpreted in the light of theory; in fact, without such interpretation experimental results may actually prove misleading.

In the present paper the whole of the points are made and arguments discussed as concisely as possible; it is the author's intention that the references given should be consulted when the present resumé or abstract is found inadequate. The subject of skin-friction and direct resistance, however, is argued at length.

I. CONCERNING SKIN-FRICTION.

The question of direct resistance and skin-friction and their interrelation is one of considerable complexity. So long as we are dealing with a plane lamina at zero angle, i. e., in tangential motion, authorities are now agreed that in different fluids, whether air or water, at variable velocities and for geometrically similar laminae of different sizes, skin-friction closely follows a law as expressed by the dimensional equation

$$R = k\rho\ (LV)^n v^{2-n}$$

in which R is resistance; L is a linear dimension defining the size of the lamina, V is velocity, and ν is kinematic viscosity, ρ is density, and k is a constant. This equation is said to define the condition of dynamic similarity. The index n is not of necessity a constant; thus, the foregoing equation may be looked upon as only literally true in its differential form. For any given point on the friction velocity curve, it defines, locally, the rate of change for variations in any or all of the three variables concerned; it does not mean that the curve of resistance for any considerable length is, of necessity, of the form suggested by the equation in its integral form.

In view of the fact that in actual problems such as come within the range of ordinary experience, the index, n, is never far from 2, it is usual to regard skin-frictional resistance, along with other direct resistance, as following the ordinary V^2 law; thus, it is expressed as a coefficient whose value depends, for any given fluid, i. e., air or water, upon the value of the product LV; variations in this coefficient may be regarded as necessary to correct for the cumulative effect of considerable changes of LV. These variations of the coefficient may be graphically represented as in Fig. 1, in which a parabola drawn as a local approximation to an arbitrary curve, will require a different constant according to the point on the curve chosen.

Thus the constant, or coefficient of skin-friction, is commonly expressed either, as in the author's "Aerodynamics", in terms of the resistance of the same lamina moving normally, by the symbol ξ, or it is expressed by a constant C_o in accordance with the equation

$$R = A \times C_o \rho V^2,$$

in which A is the area of the lamina, and ρ the density of the fluid, C_o being the constant for zero angle. When the coefficient ξ is employed, it is assumed in the author's work to be the double-surface coefficient, namely, it relates to the resistance of a lamina rather than a surface. If the constant C_o be taken, also, as that proper to a lamina, it is related to ξ by virtue of the usual equation of the normal plane,

thus,
$$P_{go} = C_{go} \rho V^2$$
$$C_o = \xi C_{go}.$$

Or if the constant C_o be taken to relate to a single surface (as

is sometimes the case), it is half this value. C_{00} may be taken as having a constant value 0.6 or 0.62 for the purpose of this relation; its variation as a function of aspect ratio may be ignored. When the author originally adopted his form of expression, i. e.,

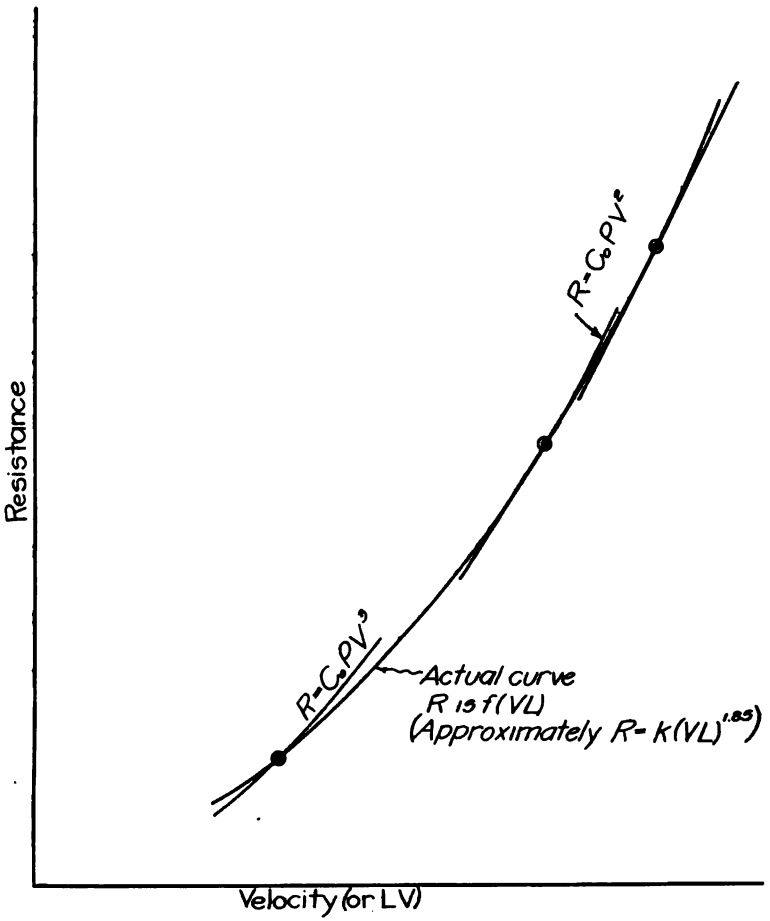

Fig. 1.

that representing the skin-friction in terms of normal-plane resistance (many years before the publication of his work in 1907), the general perspective of the subject was not quite so clear as it is today; otherwise he would have given preference to the C_o constant. The difference between the two modes of expres-

sion, however, is of no great importance once the position is clearly stated.

The author has given graphs for the value of ξ for variations of (LV), Fig. 2, which is from his James Forrest Lecture, 1914, these graphs being founded on the assumption of a constant index, n, of 1.9, this probably is only a rough approximation to the truth; the result, however, agrees fairly well with the determinations, both of Zahm and of the author, for air, and those of the late William Froude for water.

Incidentally, it is pointed out that since in the design of a flying machine (for the condition of least resistance) the linear size of the aerofoil varies inversely as the flight velocity, we have, for any given weight of machine, LV a constant; so that the coefficient of skin-friction depends primarily upon the weight of the machine. This fact is represented by the upper ordinate scale in the figure, the weight being given per unit of the aerofoil defined by the square of the chord, in other words, weight n (here n represents the aspect ratio); it is necessary to put the expression in this form to take account of different values of aspect ratio being employed. The assumption involved is that when the condition of geometrical similarity is departed from the fore-and-aft dimension fairly represents the L of the dimensional equation: the author believes this to be approximately true where skin-friction is in question.

It is impossible to harmonise the work of different writers on skin-friction as completely as one would wish, since the work has, in the past, been conducted in an entirely empirical manner. The law of dynamic similarity, as defined by equation (1) was not made use of either by Froude or Zahm, and no attempt was consequently made by either of these investigators to establish its accuracy experimentally by the employment of geometrically similar planes, or to ascertain that which the present author believes to be approximately true, namely, the relative negligibility of the width and proximate identity, for practical purposes, of the fore-and-aft dimension and the L of the fundamental equation. That the author's view is by no means the obvious view is evident from the fact that in a report contributed by the staff of the National Physical Laboratory to the proceedings of the Advisory Committee for Aeronautics (No. 54, March 1912) the width

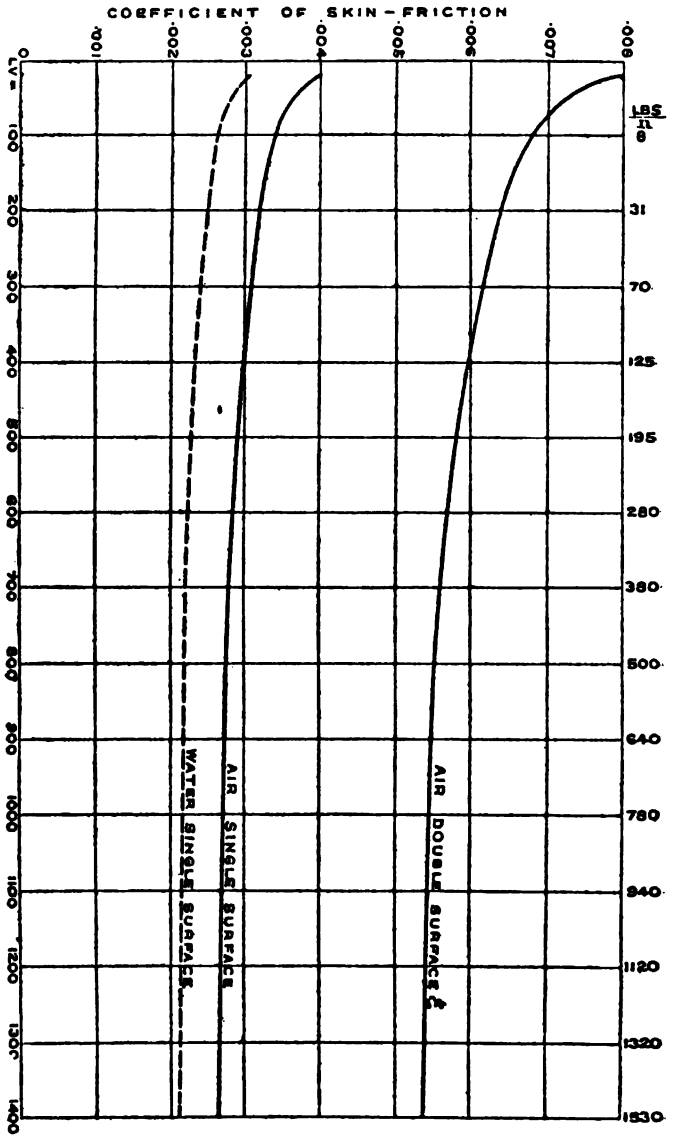
COEFFICIENT OF SKIN-FRICTION
·001
·002
·003
·004
·005
·006
·007
·008
LV =
0
100
200
300
400
500
600
700
800
900
1000
1100
1200
1300
1400
LBS/ft²
0
31
70
125
195
280
380
500
640
780
940
1120
1320
1530
WATER SINGLE SURFACE
AIR SINGLE SURFACE
AIR DOUBLE SURFACE

Fig. 2.

of the plane is assumed to have the same importance as its length, and the square root of the area is taken as the equivalent of the L of the equation: the present author believes this view to be wrong, but there is no existing means of proving who is mistaken.

The problem the author set himself, of bringing into line and harmonising his own results with those of Froude and Zahm, as given in Fig. 2, involves the interpretation of the work of the latter in the light of the equation of dynamic similarity, and the value of the index n adopted, 1.9 (as originally proposed in Report 15, 1909, Adv. Comm. Aeronautics), was derived as a compromise; this compromise being, in part, based on the direct values suggested by both Zahm and Froude, as relating to velocity, and, in part, based on the relative values for air and water given, respectively, by these authorities, in view of the difference in the kinematic viscosity, that of air being taken as 14 times greater than that of water. The index 0.1 was found to be approximately applicable.

It cannot be too clearly stated that, broadly speaking, whenever the principles of dynamic similarity are employed or in question, the quantity L, which defines the linear size, may be any linear dimension, so long as it is the corresponding dimension in every case, because dynamic similarity presupposes geometrical similarity. Thus, if a cube be the subject of experiment, L may be chosen as an edge, or it may be a face diagonal, or it may be a trigonal diagonal; but whichever be initially taken must always be taken: L is then a true measure of linear size. Without the condition of geometrical similarity, it is clearly impossible to define variation of size by a single linear dimension; and it is only possible then to apply the principles of dynamic similarity when it can be otherwise demonstrated that some particular dimension or condition is unimportant owing to the special circumstances of the problem; thus, at the best, this will be regarded by the physicist as somewhat loose. The problem of skin-friction, in the absence of further experimental determinations, must be considered as a case in point.

II. DIRECT RESISTANCE AS RELATED TO SKIN-FRICTION.

Immediately we depart from the case of the plane lamina in tangential motion, all the simplicity of the problem disappears.

The inclined lamina, for example, at small angles invariably shows a fictitiously low skin-frictional resistance; a flat plate of finite thickness, whether in tangential motion or inclined, also may show a fictitiously or apparently low coefficient. Again, in the case of an aerofoil of pterygoid (winglike) form, such as commonly adopted, we may likewise find apparently less skin-friction than would be calculated from its "wetted" surface. An important point, however, in all these and similar cases, is that although the skin-friction may be abnormally low, in no case is the total resistance less than the skin-friction as ordinarily calculated. In other words, in all the cases cited, the skin-frictional resistance is accompanied by resistance of other kinds, and these other kinds of resistance "mask" the skin-friction to a greater or lesser degree.

In endeavoring to analyse, experimentally, the total resistance, whether it be of a spar section, or an ichthyoid body, or an aerofoil, the accepted method is to determine the pressure distribution over a mapped-out series of sections by means of a number of small holes and tubes connecting to manometers or pressure gauges; the total pressure reaction in any direction is then obtained by integration, and the difference between this total and the actual resistance, as determined in the ordinary manner, is attributed to skin-friction. An investigation of this character was made by the staff of the National Physical Laboratory (Report No. 73, March, 1913; Adv. Comm. Aeronautics), the result being that, in the case of a particular aerofoil, skin-friction was actually found to represent, at the most, about one sixth of the total resistance. Probably if the same method had been adopted in the case of the "planes" of rectangular section employed by the late Prof. Langley, the direct evidence of skin-friction would have been even less—possibly it would not have been detected at all. Now there is nothing really wrong with the method; it is in itself quite reasonably accurate. What is really wrong is the interpretation which is too frequently put upon the results; for example, in the case of the planes of rectangular section employed by Langley it may have been literally true that, as Langley states, the resistance could be, practically speaking, accounted for by the edge effect, as separately computed; but to have built upon this fact, as demonstrating the negligibility of skin-friction, is today

generally admitted to be quite without justification. The truth is, as pointed out in the author's "Aerodynamics", the edge effect merely serves to mask the skin-friction; both the edge and the faces of the planes are washed by the same air, and if this air is given a forward motion by the direct pressure on the edge, the faces of the plane are relieved of the greater part or the whole of their ordinary skin resistance. Similarly in other cases, as, for example, the aerofoil forming the basis of the investigation at the National Physical Laboratory, the edge effect—or, more generally expressed, the "bluffness" effect—is equally present and prevents the full influence of skin-friction from being developed. In all such cases the direct resistance is present and is at least as great as, and in practice greater than, the skin-friction which

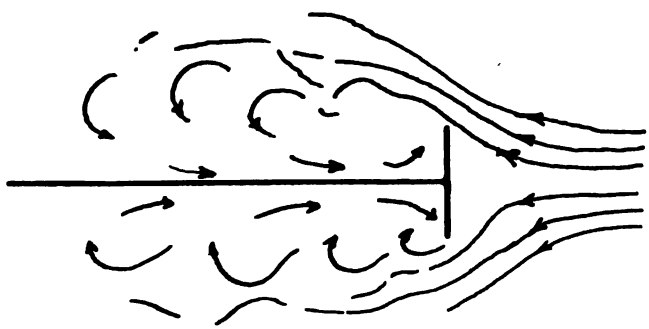

Fig. 3.

it masks. It is indeed possible that the skin-friction may be rendered negative; for example, if a lamina in tangential motion be preceded by a small normal plane or other bluff body, Fig. 3, the lamina, being wholly surrounded by the "dead-water" and situated where it is known the latter has a forward movement, may be actually dragged forward instead of being resisted by skin-friction. The whole position is illustrated diagrammatically by Fig. 4; here ordinates represent resistance and abscissae may be taken to be a measure of bluffness, on any basis we fancy. Now, when the bluffness is zero we have the case of a thin lamina in tangential motion, and the resistance is that due to skin-friction. When any degree of bluffness, whether by edge thickness or otherwise, is introduced, the resistance is increased, perhaps at first

in very small degree and later more rapidly, as shown by a curve *a b*—this represents, in fact, the measure of the direct resistance. From an engineering point of view, it is this total direct resistance and its measurement which concerns us; it matters not one iota whether as the resistance increases the skin-friction actually remains constant, as shown by the line *a a*, or whether it decreases, as shown by the line *a c*, or even if, as at *c d*, it becomes negative. One thing is clear, the skin-frictional resistance as based on a lamina of equal area (and the same plan form) gives us a minimum value for direct resistance.

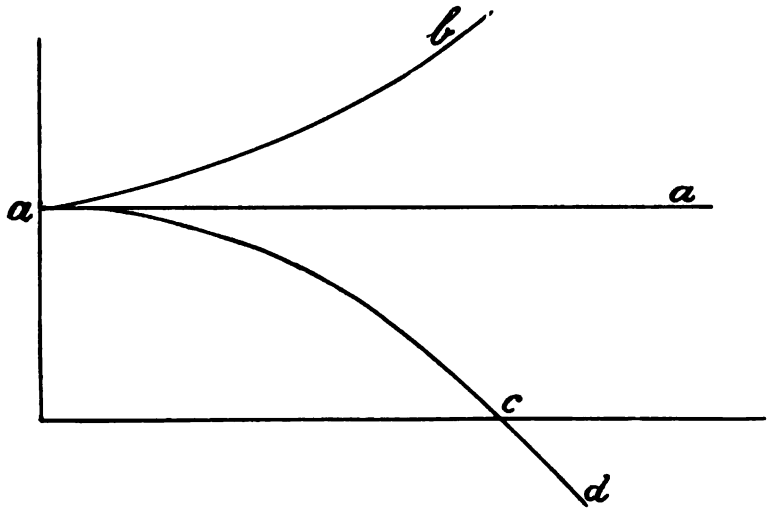

Fig. 4.

Thus the propriety, or otherwise, of assessing the direct resistance of an aerofoil, or tail member, or fin, on the basis of skin-friction depends upon the extent of the bluffness with which, in practice, we may have to deal; upon the augmentation in resistance to which, following Fig. 4, this will give rise; and upon the possible alternative methods which may be open if the skin-frictional basis be rejected. On the other hand, it does not depend in the least degree upon the results of such experiments as those cited (Committee Report 73) or upon the presence, or otherwise, of actual skin-friction as determined by even the most

scientifically exact methods. Evidently if we go to the extreme and think of the bluffness as comparable to that of a normal plane, such, for example, as in the case of a circular cylinder, all idea of founding an expression for the resistance on a basis of skin-friction must be abandoned; such a basis would be clearly inadmissible. So long, however, as we are dealing with forms which are admittedly designed on as fine lines as possible with the very idea of avoiding unnecessary direct resistance (which is true of any rationally designed aerofoil or fin), we are on precisely the same footing as obtains in the case of the hull form of a ship, in which the basis of skin-friction, with an augmentation variously assessed, is universally admitted.

The author has found a great tendency, amongst those engaged, to conduct aerodynamic (wind channel) experiments to deny the validity of these really most elementary considerations, and instead of assisting the theoretical understanding of the subject by determining the approximate augmented skin-friction values for different degrees of bluffness and camber, an enormous amount of time and money is being wasted in the vain endeavour to prove that skin-friction cannot have the importance attaching to it, because it is not really there. If those in charge of our naval and other experimental tanks had shown no more perspicacity, our knowledge in matters pertaining to ship forms and resistance would not be where it is today.

In the author's opinion and experience the skin-frictional basis of computing the direct resistance is completely justified for fin or spar sections of good form up to a thickness whose maximum does not exceed about 0.13 or 0.14 of the fore-and-aft length —it may be justified even beyond this; with experimentally determined coefficients much more could of course be done. In the case of the aerofoil—and it is here the greatest importance attaches to the method—it is probable that the "camber" effect and the "bluffness" effect have to be simultaneously taken into account. The author has found that with aerofoils carrying about half the pressure intensity proper to a normal plane at the same velocity (C in absolute units $= 0.3$), the ordinary coefficient of skin-friction requires to be augmented by about 60%; a portion of this, however,—about 10%—is calculable as due to the augmented mean square of the air velocity in the vicinity of the

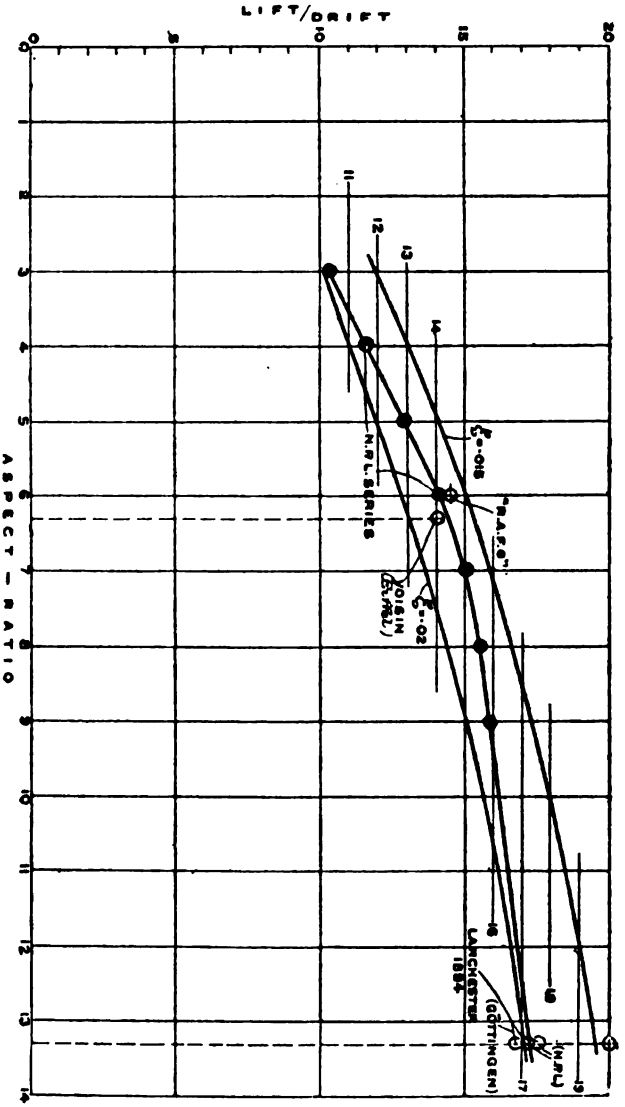
LIFT/DRIFT
ASPECT — RATIO
N.P.L. SERIES
"R.A.F.6"
LANCHESTER 1884
(GÖTTINGEN)
(N.P.L.)

Fig. 5.

aerofoil, as deduced from the local pressure values. Thus, for models of a scale suited to wing channel experiment, the augmented coefficient ξ (double surface) is about 0.015 to 0.016 (corresponding to $C_o = 0.01$), and for full-sized machines, $\xi = 0.01$ or $C_o = 0.006$.

III. THE TEST OF EXPERIENCE AS CONFIRMING THE SKIN-FRICTION BASIS OF DIRECT RESISTANCE.

Those responsible for the design of actual machines, in common with those engaged on aeronautical research, have continually in view the reduction of the resistance coefficient of the member of support—the aerofoil; consequently, in the results of recent experiment and in the forms developed we may fairly presume that we have some reasonable approximation to the best that can be done in this respect. Now, in the author's "Aerodynamics" (1907) tabulated values are given for the least gliding angle for aerofoils of different aspect ratio and for various values of skin-friction coefficient—it is of interest to compare these results. This has been done in the author's recent James Forrest Lectures, from which Fig. 5 is taken. Here we see two curves representing the theoretical values of the lift resistance (the converse, or reciprocal, of the gliding angle) plotted from the author's original tables, for values of aspect ratio varying from $n = 3$ to $n = 13$, the skin-friction coefficient (augmented values) being taken as $\xi = 0.015$ and $\xi = 0.02$ in the two curves. On the same diagram are plotted various results, mainly quite recent determinations made at the National Physical Laboratory; these latter lie consistently between the two theoretical curves, and a point of great interest is that these values show (compared to the curves of theory) far better results at about an aspect ratio of $n = 6$ to 7—there is, in fact, an incipient "hump" in the experimental values about here. Now this is just the value of aspect ratio most commonly adopted in actual machines, and it is a value for which far the greater part of the investigations and determinations that have been made relate. We may, in fact, infer that for this aspect ratio the form is more highly developed: mainly, it is the camber which is most accurately that of least resistance at this point. Hence, we see that, assuming

the theory as correct, the form of the experimental curve is just what we might anticipate; further, we may infer that were the other values of aspect ratio as carefully worked out as that in question, the curve would lie parallel to those of theory and would, in fact, denote an augmented coefficient of skin-friction of about 0.016 or 0.017.

As a confirmation of the author's view, the foregoing is little short of complete, especially when it is borne in mind that at the date of the publication of the table represented by the curves in Fig. 5, very little had been published on the subject of aerofoils of curved sectional form—as a matter of fact, the author relied exclusively on his own deductions as given in his work already cited.

The foregoing example is but one of many that might be given as demonstrating from facts the truth of the skin-frictional basis; the pressure tables given in "Aerodynamics", pp. 270 and 271, for instance, are in close agreement with present-day experience and depend upon the same foundation theory. Beyond this, the difference, such as it is, between the least gliding angle for high values and low values of (LV) is clearly to be explained as a result of the corresponding difference in the friction coefficient.

The variations in the coefficient ξ, on which the tabulated figures in the author's work are based, cover a range from 0.01 to 0.03. We have already seen that the first of these figures is that which roughly obtains in the case of a full-sized machine at ordinary speeds of flight—briefly, for a machine of about one ton weight. The higher limit, 0.03, may be taken as required to cover the conditions of extremely small-scale work such as indulged in by the author in his experiments and determinations with mica models; the lightest of these weighed approximately 1 grain (0.062 grams). The least estimate for the normal coefficient for a model of this size, $LV = 1/8$, is about 0.013, with a corresponding augmented value of about 0.021; the probability is, however, that it is considerably higher in the region of 0.03, even if not somewhat above this figure. It is the author's opinion that the index diminishes rapidly for very small areas and low speeds, such as those in question, with a correspondingly greater increase in the coefficient.

IV. RESISTANCE OF THE INCLINED PLANE LAMINA.

The particular case of the inclined plane lamina is worthy of special note. It is sometimes assumed in the case of the inclined plane when used for experimental determinations or as a means of sustentation in flight, that the whole of the resistance component derived by a resolution of forces about the angle of inclination represents work done aerodynamically. In one sense this may be true; it is, however, as a matter of fact, possible to separate, analytically, the proportion of the energy so expended which is usefully employed in sustaining the load, from the proportion dissipated in useless eddy making. Assuming this analysis, it is clear that the useless eddy-making resistance may be regarded as direct resistance, and, as such, it has been demonstrated, both by theory and by experiment, that it is capable of masking at least half of the skin-friction as ordinarily computed —perhaps more than half; on the other hand, this kind of direct resistance does not follow the usual V^2 law, and it is just here that the special nature of the case becomes manifest. We have a form of direct resistance, which instead of varying directly as V^2 varies as part of the aerodynamic resistance and, within limits, may be regarded as proportional to the aerodynamic resistance; so that from the point of view of the equation of least resistance, the whole of the resolved resistance component requires to be considered as V-resistance—that is to say, of aerodynamic origin. The position is admittedly complicated; but so far as the condition of least resistance is concerned, it is approximately reached if it be assumed that the upper surface of the plane is not subject to surface friction owing to its being situated in a "dead-water" region, and that the resolved resistance be taken as the aerodynamic resistance. In other words, the calculation is made in the usual manner, but the single-surface coefficient is made use of in place of that for double surface. For the fuller discussion of this case reference should be made to the following.

V. SUSTENTATION IN FLIGHT.

The author's theory of sustentation in flight is based on the more general theory of vortex motion. The author believes he

can claim priority as far as the discovery of the vortex or cyclic system surrounding the aerofoil is concerned, this, as already stated, having been the basis of a paper submitted by him to the Physical Society of London in 1897. The theory in question, with the results of a considerable number of other investigations, eventually received publication in the year 1907 in the author's "Aerial Flight".*

The vortex or cyclic theory of sustentation in flight has been still further developed recently, the latest results being summarised in a paper contributed by the author to The Institution of Automobile Engineers,† and the discussion on this paper conveys some impression of the extent to which the subject is one of controversy. Briefly stated, it is not only shown that a vortex system, comprising a cyclic component in the fluid surrounding the aerofoil, is necessary to account for known phenomena; but it is also demonstrated that a simple arithmetical solution to the problem of sustentation in flight follows immediately from the acceptance and application of vortex theory.

Expressed briefly, it may be stated that the aerofoil leaves in its wake a vortex pair, that is to say, the two-dimensional analogue of a vortex ring. The vortices forming this vortex pair are not usually simply vortices, but are complex, each vortex element comprising, generally speaking, filaments or individual vortices wrapped up and involved in the common cyclic motion. It is shown that the origin of these vortices at the after edge of the aerofoil is due to a Helmholtz surface of gyration resulting from the components of motion, towards and away from the axis of flight, impressed on the different parts of the air above and below in the vicinity of the aerofoil. Also a part of the vortex system arises from flow of the discontinuous type beyond the lateral extremities of the aerofoil. The two phenomena thus concerned in the generation of the trailing vortex pair are depicted diagrammatically in Fig. 6. It is shown in the author's recent paper that it is possible to assess with considerable accuracy the supporting reaction sustained by the aerofoil from the downward-momentum equivalent of the trailing vortex pair.

* Constable & Co., London.

† The Aerofoil in the Light of Theory and Experiment, Proc. Inst. Auto. Engrs., Vol. IX. Constable & Co., London.

Now it is well established that any simple vortex pair may be generated by an impulse applied over the area included between the two focal filaments, and that the momentum per unit area communicated by the said impulse is constant; a simple vortex pair, however, is not a possible system—the conditions in the vicinity of the foci or filaments are, from the standpoint of practice, indeterminate. In the case of a complex vortex pair, it is necessary to imagine that a number of impulses are applied simultaneously, an impulse system distributed, in fact, over a certain width or belt (represented by the track of the aerofoil), and thus the downward momentum per unit area of the different longitudinal elements of the said belt will vary amongst them-

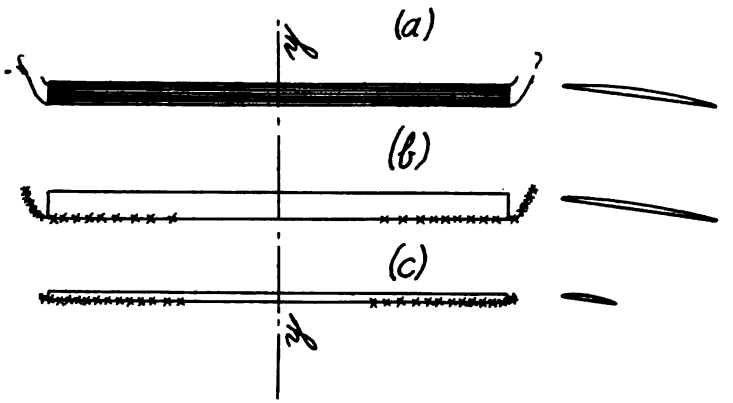

Fig. 6.

selves. In order to obtain an arithmetical solution, it is necessary to ascertain or assume some definite form of distribution, and, to a certain extent, to solve the resulting hydrodynamic system.

In the paper in question, the author has shown that there is a particular system already to hand of which the mathematical solution is known. This system is depicted by its streamlines, plotted from the mathematical equation in Fig. 7—the diagram in question being found in any standard works on hydrodynamics. This streamline system corresponds to that of an elliptical cylinder in "broadside on" motion, the system being applicable to any ellipse of which the two extremities of the base

line are the foci, and the base line itself represents a special case of such an ellipse; thus the streamlines shown are also those of a plane in broadside motion.

Now, it is an established fact that any elliptical cylinder set into broadside motion involves, in the air surrounding it, a movement whose energy and inertia are equal to that of a circular cylinder whose diameter is equal to the major axis of the ellipse. Thus the whole motion depicted in Fig. 7 is the equivalent, both as to momentum and energy, of a circular cylindrical mass of the air whose diameter is equal to that of the base line.

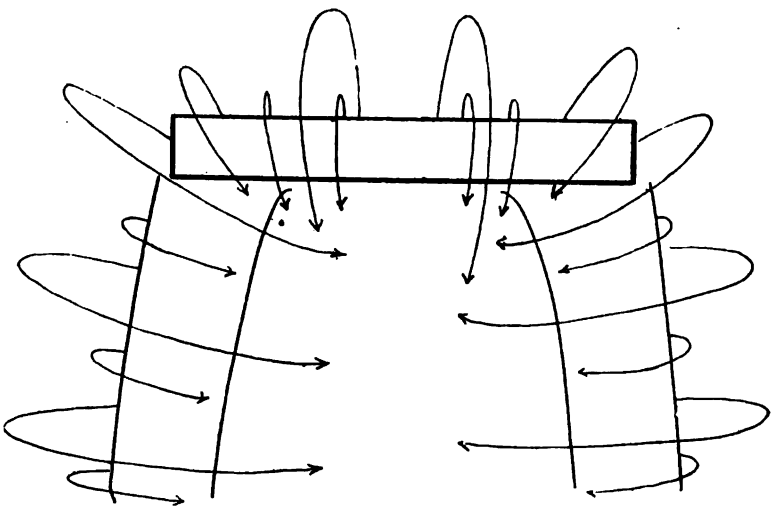

Fig. 7.

Now, in the actual problem of flight, the force acting on the air is not an impulse distributed over an area; it is an impulse, if we may say so, spread by the advancing aerofoil. As a matter of fact, the force exerted by the aerofoil is not impulsive, inasmuch as it is a finite force acting through some finite time; but if we consider the load of an aerofoil as distributed along an axis parallel to its leading edge—otherwise, an axis at right angles to the line of flight—we may imagine this application of force as representing an impulse on each two-dimensional vertical slice of the air through which it cuts. This, however, is not the whole

story, since the air is not confined to two-dimensional motion, but if we consider also a vertical plane in the line of flight, we find that the movement of this impulse line is consistent with, and in fact implies, a cyclic motion in that plane superposed on that of translation. It is well-known that cyclic motion thus superposed on translation actually involves a force at right angles to the line of flight, and so the cyclic motion in the vertical plane of flight accounts definitely for the direct lateral reaction on the aerofoil. One method of demonstrating, quantitatively, the magnitude of this lateral reaction is to consider the movement of the central filament of a cyclic system as, of necessity, representing an extension of an impulse surface equal to the actual area swept by the filament, and so the movement of the filament will represent an amount of momentum whose measure is the momentum density of the impulse surface multiplied by the said area. This gives an accurate measure of the sustaining reaction.

It will thus be seen that, in the vortex theory of sustentation, we have two definite quantities, both representing a measure of the sustaining reaction. First, we have a downward momentum of the ultimate or trailing vortex system, and second, we have the measure as to the local extension of the impulse surface as measured by the advance of the aerofoil and extension of the impulse surface. These two measures are essentially equal; they correspond respectively to the mass and motion in the peripteral area, and the mass and motion in the "sweep" area, as defined in the author's original investigation. Further, in relation to the design of the aerofoil, they correspond respectively to "the primary and secondary camber", as defined in the author's recent paper. In the author's latest method of treatment, the primary camber is a hypothetical quantity which represents, in the curvature of an imaginary aerofoil, the change of motion from the initial state to the final state, and is best considered as the form which would be adopted for an actual aerofoil if the particles of the air were constrained to move only in planes at right angles to the axis of flight. The particular condition shown in Fig. 7 (the streamlines of the elliptical cylinder) corresponds to a primary camber uniform from end to end of the aerofoil; in the extreme case of the base line—when the ellipse becomes a plane, in other words—the normal component of the motion imparted to the air is every-

where equal. Thus, the passage of the aerofoil through any given vertical plane is equivalent to a short movement of the normal plane, represented by the base line of Fig. 8, and the subsequent "solution" or disappearance of the plane from the vertical stratum in question. On the basis already discussed, the motion so left in the air will be equal to that of a horizontal cylindrical column of circular section, the section diameter being that of the span of the aerofoil, Fig. 9.

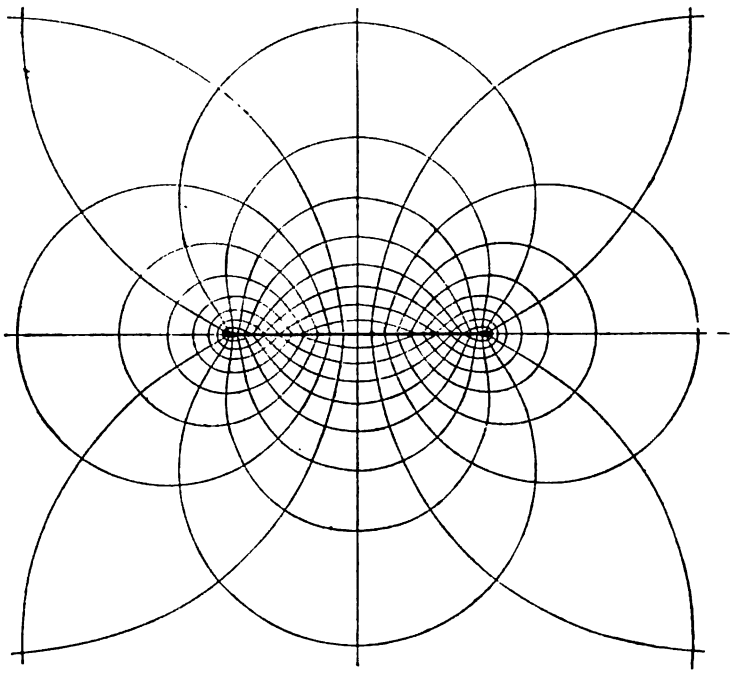

Fig. 8.

Thus, we see, so far as our ultimate dealings with the air are concerned, that we have an arithmetical measure of the momentum communicated and energy expended for an aerofoil of uniform primary camber. The primary camber, however, is not the actual camber of the aerofoil; because, in the region of the aerofoil, it is shown that we have to deal with a cyclic component in the vertical plane of flight. The character of the streamlines, in

such a case, show that there is an up current in the region of the leading edge of the aerofoil, and an equal down current at the trailing edge; and this system superposed on that dealt with by the primary camber represents the actual flow with which the aerofoil has to deal. This is shown to require that the aerofoil will have an additional camber superposed on the primary camber, as depicted in Fig. 10, and this additional, or secondary, camber being everywhere proportional to the motions with which the aerofoil has to deal, will need to vary from point to point

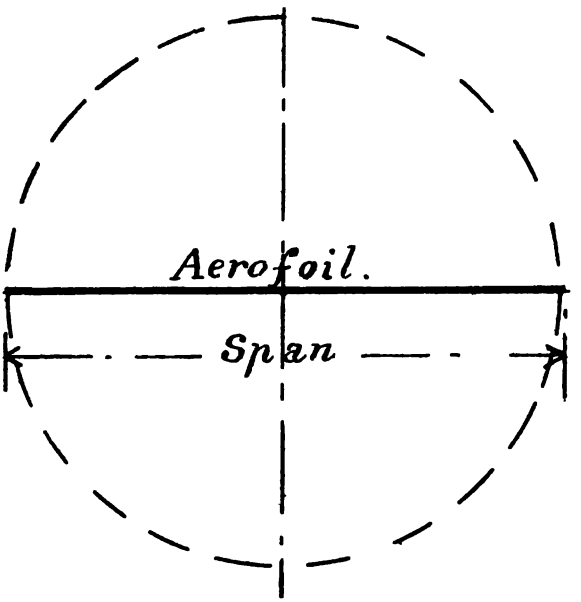

Fig. 9.

along the span of the aerofoil in accordance with the intensity distribution of the cyclic motion. The whole of this question is fully discussed in the author's work and paper referred to. For the particular example in question, the streamlines of the elliptical cylinder, it appears that the secondary camber should be graded from maximum in the central plane to zero at the extremities of the aerofoil; the ordinates of the camber being those of an ellipse, or otherwise expressed, proportional to the ordinates of a circle, Fig. 10.

In the majority of flying machines, at the present day, the aerofoil does not differ greatly from that depicted in Fig. 11. In some cases, the actual camber, which represents the sum of the primary and secondary camber, is uniform from end to end, but more commonly there is a certain degree of "washout" which renders the form, on the whole, a close approximation to that of theory. In any case, the variations in the actual camber of the aerofoil, more especially at the extremities, result in comparatively small variations in the dynamic value of the resulting vortex system, so that we may expect that the result here given—viz., that the ultimate mass of air dealt with by an aerofoil may be measured by the content swept by a circle whose diameter is the span of the aerofoil itself—will apply with approximate exactitude to the general run of experience. Actual calculation proves the soundness of this deduction.

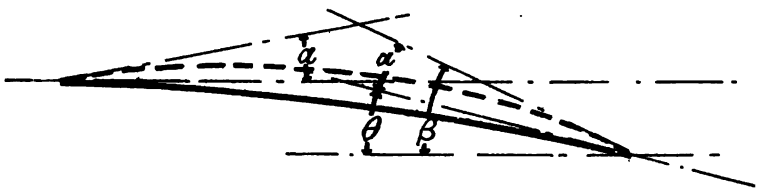

Fig. 10.

In a further paper, also read before the Institution of Automobile Engineers, the bearing of the foregoing theory is dealt with as relating to the screw propeller. In the author's earlier work, the screw propeller had already been dealt with on the basis of vortex theory, and the conditions of maximum efficiency had been investigated ("Aerodynamics", Chap. IX). The extension of propeller theory, in the paper now in question, carries the matter further and deals with the condition of maximum efficiency under restricted conditions, that is to say, under conditions in which the diameter or the pitch is so restricted artificially that the optimum condition is not available. An investigation of this kind has for some time been wanted by the aeronautical designer; it is frequently advantageous to restrict the propeller diameter for reasons concerning ground clearance, at other times it is desirable to limit the pitch in order to obtain

the required speed of crank-shaft revolution. It is, in any case, desirable that the designer shall be in a position properly to weigh the pro and cons, or relative advantages, of a geared or a direct-driven propeller. When this choice exists, the advantage of the direct-driven propeller, and consequently finer pitch, consists, first, in the avoidance of gearing, which is objectionable from the point of efficiency loss, noise and weight; and second, in the reduction of the torque of recoil borne by the machine in flight. On the other hand, the disadvantage of a direct propeller, with its consequent fine pitch, is usually a measurable loss of efficiency; the appropriate system to adopt depends upon the balance of advantages and disadvantages. Hitherto the question has been usually settled by rule of thumb and trial and error; the designer, first, has not had theoretical guidance as to what pitch he should employ under an artificial restriction of diameter; neither has he had anything to tell him what a given pitch restriction necessarily means in the matter of lost efficiency. In the paper in question, the main conclusions are summarised in the diagram reproduced here in Fig. 12. For fuller information, and for details of the investigation on which this diagram is based, reference should be made to the paper in question. Incidentally, the paper includes investigation on the stationary screw, or helicopter, and a discussion of the previous investigation on the special case of the condition of maximum efficiency.

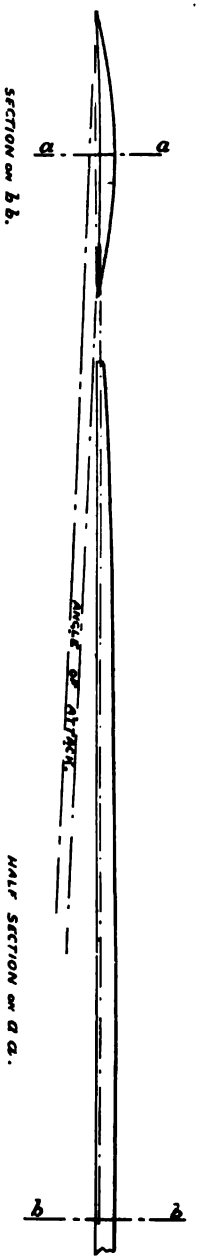

Fig. 11.

and diameter.

$$Thrust = C_p v_1^2 \frac{\pi D^2}{4 \times 32 \cdot 2} \text{ pounds.}$$

Fig. 12.

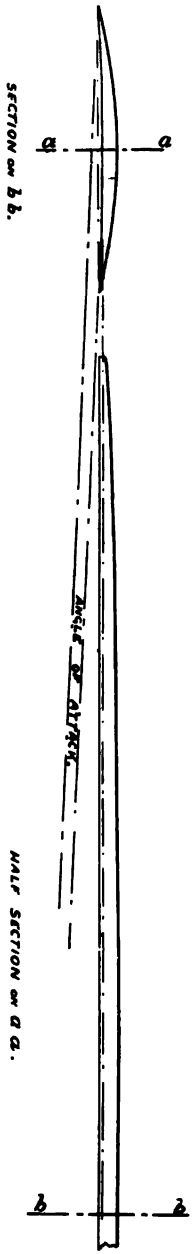

Fig. 11.

and diameter

and diameter.

$$Thrust = C_p v_1^2 \frac{\pi D^2}{4 \times 32 \cdot 2} \text{ pounds.}$$

Fig. 12.

Paper No. 225

EXPERIMENTAL RESEARCHES IN FRANCE ON THE RESISTANCE OF AIR.

By

L. MARCHIS
Professor in the Faculty of Sciences of Paris
Paris, France

CHAPTER I.

CLASSIFICATION OF EXPERIMENTAL METHODS.

1. Reactions exerted by the air on a body in relative movement with it.

When a body is in movement relative to the air with which it is surrounded, it is subject to a system of forces to which is given the name of "reactions exerted on the body by the air". These reactions are variable, especially as regards: (1) The form of the body, (2) the position which it occupies in relation to the surrounding medium, (3) the various circumstances of its movement (time elapsed from origin of movement to present moment; velocity relative to the air), and finally, (4) the mass of the fluid which surrounds the body in movement.

We shall not develop in detail the difficulties presented by each of these problems, of which certain have received only very imperfect solutions.

We shall, in what follows, consider only the case of a body surrounded completely by a great mass of air, relative to which it has a movement, established a long time previously, and of which the velocity and direction are constant and readily determined.

The reactions exerted by the air on the body in movement relative to it are reduced to a force and a couple. We shall

assume that the body under experiment possesses, at the least, a plane of symmetry, thus eliminating the couple from the reactions of the air and reducing them to a single force, to which we shall give the name of "resistance of the air on the body in movement relative to it".

When we consider the movement of the body relative to the air which surrounds it, we have not only in view a movement of translation, but also a movement of simple rotation, and, likewise, a movement of rotation combined with a movement of translation. In other words, we shall study here the problem of the propeller, as well as that of the wings of an aeroplane.

2. Manner of producing the movement of a body relative to the air which surrounds it. Body movable.

Various experimental methods may be utilized in order to produce the movement of a body in reference to free air.

In an indefinite mass of air, at rest as a whole, the following types of movement may be given to the body:

(a) A movement of rectilinear translation;

(b) A movement of rotation about the axis of a mechanism;

(c) An oscillating movement, as in the case of a pendulum.

The methods by means of some form of mechanism or by means of a pendulum have been but little employed in France and we shall omit special reference to them.

The method employing the motion of translation may be applied in two forms:

(1) The body is allowed to fall freely in air, as calm as possible.

(2) The body is carried on some form of car which is moved in calm air.

In France the method of free fall has given rise to important investigations made by MM. Cailletet and Colardeau and especially by M. G. Eiffel.

The method by means of a car is now utilized by the Aerodynamic Institute of Saint-Cyr, at the laboratory of military aero-station of Chalais-Meudon, and also by M. the Duke

of Guiche. At Saint-Cyr and at Chalais-Meudon, the car is composed of a carriage moving on rails. M. de Guiche employs an automobile as a carrier.

A variant of the method of the car has been installed at the laboratory of military aviation at Vincennes. On a stretched cable a little hanging car rolls, carrying, attached below it, the objects under test with the necessary instruments.

The dimensions of the bodies on which the experiments are carried out may be of the order of those which are utilized in aviation itself. In other words, it is possible to operate upon equipment as used in actual aviation, or at least presenting dimensions differing but little from those used in practice.

From this point of view the method by displacement through the air opens up a field of investigation more extended than the method in which an artificial current of air is employed.

3. Manner of producing the movement of a body relative to the air which surrounds it. Artificial current of air.

It is possible, in fact, to realize in an entirely different manner the relative movement of a body through the air.

Instead of moving the body under test, a fixed position is given to such body placed in an artificial current of air.

The body may then be disposed in the free air in front of the orifice through which the air enters under regulation by means of suitable devices. This method has been employed by M. Rateau.

The body under investigation may also be placed in an enclosure or integral part of the apparatus for the regulation of the current of air. It is placed, for example, in a part of a large cylindrical pipe which receives a current of air produced by a fan and of which the velocity, at a certain distance from the walls, has been rendered sensibly parallel to the pipe.

This method, furthermore, may be subject to certain variations:

(a) The body under investigation alone is placed in the enclosure in the interior of which the artificial current of air is produced. The apparatus for measuring the reactions of the air are on the exterior of this enclosure, their connection with

the interior being made through the solid wall which limits the conduit.

This method is known under the name of the "tunnel method". It has not been largely employed in France. There exists at the present time at the Aerodynamic Institute of Saint-Cyr a tunnel of which the practical use has been interrupted by the present war.

(b) The apparatus employed for determining the circulation of the air is enlarged into a chamber of suitable size, traversed between two of its parallel walls by a cylinder of moving air. On the outside of the latter and within the chamber are located the experimenters with the necessary measuring apparatus.

We propose to call this the "Eiffel method".

In France this method has given very complete results. It is for us the characteristic method in connection with the use of an artificial current of air.

From the point of view of the convenience of carrying on the experiments, especially in large numbers, the last method is superior to the method by displacement in free air. The latter demands, in fact, that the external air shall be as calm as possible. This condition can only be realized on certain days and then only for certain hours of a given day. If along the right-line path of the body under investigation the wind should have everywhere the same intensity and the same direction, due allowance might be made for its existence.

But many investigations, notably those of M. Maurain at the Aerotechnic Institute of Saint-Cyr, show that at any given point in the air the wind is frequently subject to continual changes in direction and intensity.

But even if it allows the experimenter to regulate the conditions of any one investigation, the method by the use of the artificial current of air can only be applied to models reduced in size in comparison with actual practice in aviation. We shall see later the reason for this limitation.

One question immediately presents itself: How may the results obtained in the study of models be transformed in order to furnish information applicable to apparatus of full size? What is the law of similitude which makes possible the trans-

formation of an investigation on a small scale to corresponding phenomena on a large scale. This is the matter which we shall especially develop at a later point.

A further question presents itself: Do the methods mentioned above, namely, the displacement of the body under investigation and the method by the artificial current of air, lead to the same results? M. Eiffel maintains the affirmative, relying upon the fundamental principle of relative movement. M. de Guiche maintains the negative, arguing that the tunnel method does not realize fully the conditions which permit the application of such a principle.

We shall return to this question at a later point, in connection with the comparison of the results obtained by these two experimenters.

4. Studies of aeroplanes in free flight.

The methods which we have just considered require that the body under investigation be connected in a fixed manner with a support. The latter has, under good conditions, its dimensions reduced as much as possible. It is also removed as far as possible from the body under investigation, so that its presence will produce the minimum of disturbance. It is none the less true, however, that the aeroplane, thus studied, is not in the precise condition of free evolution in the open air.

For this reason, investigations have been undertaken on aeroplanes during their free flight in the air. Unfortunately, the field of such investigation is limited. It cannot be carried through at the will of the experimenter; that is to say, of the pilot, who must first of all, guard against danger of fall. Such experiments give complex results often difficult of analysis. Nevertheless, it cannot be denied that such results may have a very considerable practical value.

Experiments of this character were inaugurated in 1910 by MM. Gaudart and Legrand with a Voisin biplane. These experiments were, however, neither sufficiently systematic nor numerous to lead to significant results.

Quite otherwise are the researches made by Commander Dorand, at Villacoublay, on a biplane of his own construction piloted by M. Labouchère. At the Institute of Saint-Cyr, MM. Toussaint and Lepère, Toussaint and the lieutenant-of-

aviation Gouin, have made important experiments on a Maurice Farman biplane and on a Blériot monoplane. Ingenious apparatus capable of registering the movement of the pilot was employed to furnish important indications regarding the operation of such actual aviation equipment.

5. The total resistance of the air and the determination of the pressures at each point of the surface of the body under investigation.

Let us return to the methods which, in a laboratory, may be employed in determining the resistance of the air upon a body in movement relative to it.

With regard to the method of measuring this resistance, two types may be characterized:

(1) Determination, by means of a balance, of the total resistance on the entire body under investigation.

(2) Determination, at each point of the body, of the reaction exerted by the air at this point; a study, in some manner topographical in character, regarding the pressures resulting from the relative movement of the body and the air.

This investigation immediately leads, through a geometrical composition of the individual forces thus determined, to a knowledge of the complete resistance of the air.

The method by means of the balance has given wonderful results in the laboratory of M. Eiffel and at the Institute of Saint-Cyr. M. de Guiche has applied this method solely to the analysis of the distributed pressures.

Such is the general classification of the experimental methods at present in use in France for the study of the problems of aerodynamics. We proceed to give in detail the fundamental principles of these investigations in a further study of the French aerodynamic laboratories.

CHAPTER II.

THE AERODYNAMIC LABORATORIES OF FRANCE.

1. The Eiffel Laboratories. Experiments made at the Eiffel Tower.

The Eiffel Tower was the first laboratory utilized by the celebrated engineer in his researches in aerodynamics, carried

on during the past ten years. Bodies thrown from one of the platforms of the tower have permitted a study of free fall in calm air.

The study of this movement admits, furthermore, of being made by two different methods.

The first of these methods consists in determining the velocity of uniform movement which succeeds the varying movement. To this velocity corresponds a resistance of the air equal to the weight P of the body. By augmenting the weight of the body without changing the surface, as by the addition of suitable ballast, it is possible to increase, at the same time, the limiting uniform velocity V of the movement. The comparison of the different values of P with the corresponding values of V provides a means for developing a law of variation of resistance as a function of velocity. Such is the principle of the method applied in 1892 by Cailletet and Colardeau from the second story of the Eiffel Tower (120 meters = 394 ft. above the ground).

Instead of limiting himself to the study of that part of the free fall that corresponds to uniform movement, M. Eiffel registers the values of the velocity and of the resistance of the air at each instant of the fall. The principle involved in this investigation is the following.

The surface under investigation, a plane for example, falls freely, remaining horizontal. It is supported by a spring, of which the displacements are inscribed on a cylinder revolving with a velocity directly proportional to that of the fall of the system under investigation. The compression of the spring, as a result of the resistance of the air, gives rise to a force which, by a suitable calibration, may be determined as a function of the displacements of this spring. This force produces equilibrium with the following system of forces:

(1) The weight of the system,
(2) The forces of inertia which act upon it,
(3) The resistance of the air.

It is then possible to calculate this last force when the acceleration of the system is known. To this end, it is sufficient to inscribe, by means of a tuning fork, the time of fall on the same cylinder whereon are recorded the compressions of the spring.

In a certain experiment, when the combined weight of the plate with its spring and support was 4.494 kg. (9.887 lbs.), the following determinations were made, in one case at the end of 60 meters of fall (196.8 ft.) and in the other case at the end of 95 meters (311.6 ft.).

At the End of 60 Meters.

Force of inertia (Absolute value)	3.76 kg.	
Tension of spring		4.15 kg.
Resistance of the air		4.90 kg.
Difference		=0.75 kg.

At the End of 95 Meters.

Force of inertia (Absolute value)	3.36 kg.	
Tension of spring		6.15 kg.
Resistance of the air		7.30 kg.
Difference		=1.15 kg.

These numbers show that under the existing conditions (total weight of plates, of spring, and of support rather high), the difference between the tension of the spring and the resistance of the air is clearly measurable.

By this method, M. Eiffel has studied the resistance of the air on planes of which the surfaces varied from 1/16 sq. meter (0.67 sq. ft.) to 1 sq. meter (10.77 sq. ft.) and of which the velocities of fall ranged between 18 and 40 meters per sec. (59 to 131.2 ft.). These high velocities have made it possible to operate in the open air with high precision in calm weather and as long as wind velocities did not exceed 2 to 3 meters per second (6.56 to 9.84 f. s.). The results obtained by these experiments are excellent for planes falling horizontally. They are less worthy of confidence for planes inclined to the vertical.

2. The Eiffel Laboratory. Method by the use of an artificial current of air.

This method, which consists in placing a model in the cylinder of air flow created by a fan, should be applied with the following precautions:

(1) It is necessary that the model should be placed in a mass of air theoretically indefinite, practically very great, and having a velocity constant in magnitude and in direction.

The section of the cylinder of air should be sufficiently large, in order that at the periphery the velocity of the air may be sensibly the same in magnitude and in direction as that of the air which has not yet approached the obstacle. In this method it is necessary to realize, first of all, a cylindrical current of air, and then to introduce into this current a body of dimensions so small by comparison that its presence shall not produce any sensible disturbances at the periphery of the current. Experience has shown that the ratio of the greatest dimension of the model to the diameter of the cylindrical current should not exceed 45%.

(2) It is very necessary that the model under investigation shall be practically isolated in the current of air, that is to say, that the support of the model shall play only a negligible role and shall introduce no perturbations of importance.

(3) It is necessary that the model adopted shall not be too small in size, if it is desired to extend, in a more or less significant manner, the results obtained with such model to full-sized apparatus.

In fact, when a study is made of the distribution of pressure over the various points of a plate, for example, either on the face directly exposed to the action of the current of air, or on the reverse face, it is found that this distribution becomes regular only at a certain distance from the border. There exists, both in front and behind, a central zone in which a regular regimen is established, which is manifest by isobars parallel to the forward edge. In order that this central zone may be studied, it is necessary that the dimensions of the plate under investigation be sufficiently large. In fact, the width of the marginal zone in which the pressures are irregularly distributed does not vary proportionally with the dimensions of the plate. The experiments of M. de Guiche show that this width varies but little with the dimensions of the plate. In operating on thin rectangular planes with the attacking edge perpendicular to the direction of movement, M. de Guiche has found that the marginal bands of irregular condition have a sensibly constant width, equal to 20 centimeters (7.88 in.) in front and to 40 or 50 centimeters (15.76 to 19.7 in.) at the rear. He concludes that it is well not to operate with planes having a spread less than 1

meter (3.28 ft.). In the study of curved surfaces, M. de Guiche found marginal bands of disturbance of which the sensibly uniform width scarcely exceeded 20 centimeters (7.88 in.) on the two faces. It is well, therefore, to use only surfaces whose spread is superior to 40 centimeters (15.76 in.). When lesser spreads are employed the results obtained by the use of small models do not permit of deducing, in a sufficiently precise manner, the results which would be given by the wings of an aeroplane of normal size. In the case of very small models the mode of distribution of pressure has but a very remote relation to that which would be found on wings of normal dimensions.

This condition of only using, for experimental purposes, models of sufficient dimensions leads, in the method by the use of an artificial current of air, to the employment of very large sections for the cylinder of air. For example, a study of planes having a spread of 1 meter (3.28 ft.) can only be made in a cylinder of air of which the diameter is greater than $100/.45 = 220$ centimeters (86.7 in.), approximately. As to curved surfaces, it would be sufficient to provide a cylinder of a diameter greater than $40/.45 = 89$ centimeters (35 in.), approximately.

In France, M. Rateau has utilized the method by the use of an artificial current of air. His apparatus comprises the following items:

(1) A helicoidal fan, 1.2 meters diameter (47.3 in.).

(2) A wooden chamber, 1.5 meters on the side (59.1 in.). The purpose of this chamber is to suppress, by means of suitable partitions, the turbulence produced by the fan and to create a current of air with the velocities of movement equal and parallel throughout.

(3) An outlet orifice of 0.7 meter (27.6 in.) diameter from whence issues a cylindrical current of the same diameter.

(4) A weighing balance located in the outside air at a little distance from the orifice through which the current of air issues.

Such an apparatus would permit of realizing velocities of the air reaching 35 meters (114.8 ft.) per second. The diameter of the cylinder of air however is too small. M. Rateau was not justified in introducing into this current plates 30 by 50 cm. (11.8 x 19.7 ins.) or biplanes 15 by 50 cm. (5.9 x 19.7 ins.)

(separation of planes 20 to 30 cm. = 7.9 to 11.8 ins.). The supports of the objects under investigation and of the measuring equipment were too large, causing very considerable perturbations. The experiments of M. Rateau should be noted as of historic interest, but they can be scarcely considered as having a definitive value.

Much more complete and certain are the results obtained by the installation of M. Eiffel. The Eiffel apparatus comprises the following items:

(1) An orifice from which issues a cylindrical current of air.

(2) An experimental chamber where the air is at a pressure less than normal and where are located the experimenters and the measuring apparatus.

(3) A diffuser.

(4) A fan placed at the end of the diffuser.

The current of air which enters through the orifice in the wall of the experimental chamber and which leaves through the opening of the diffuser placed in the wall opposite and parallel to the first, is a current of air produced by aspiration and not by pressure, as in the installation of M. Rateau. The aspiration removes the influence due to the turbulence produced by the fan, and a regulating box for the current of air in front of the orifice is not necessary. However, certain grillages placed in the openings for entrance to and issue from the experimental chamber play the role of regulators for the current of air.

In the laboratory of the Champ de Mars the fan was placed near the opening thru which the air leaves the chamber. A large conduit of wood received the air issuing from the fan and, gradually reducing in size, conducted it through a passage ending in the shed whence the air was drawn into the orifice through which it entered the experimental chamber.

The cylinder of air had a diameter of 1.5 meters. (59.1 ins.)

The maximum velocity of this air was equal to 18 m. (59 ft.) per second or 65 km. (40.4 mi.) per hour. The fan employed, of the centrifugal type, delivered 31 $m.^3$ (1095 cu. ft.) per second, corresponding to a velocity of 18 m. per sec. and to the circular section of 1.5 m. diameter, requiring 60 hp.

The laboratory installed at Auteuil by M. Eiffel is much

more powerful. The cylinder of air of the large equipment has a diameter of 2 m. (6.56 ft.). Velocities of the air may be realized from 2 m. to 30 m. (6.56 to 98.4 ft.) per sec. A second smaller cylinder of air, having a diameter of 1 meter (3.28 ft.), parallel to the first, provides velocities from 2 m. to 40 m. (6.56 to 131.2 ft.) per sec.

The 60 hp. is, however, not exceeded in this new installation, in which the delivery of 90 cubic meters of air (3179 cu. ft.) per second may be realized, corresponding to the circular section of 2 meters diameter and a velocity of 100 km. (65.14 mi.) per hour.

This increase in efficiency is realized by interposing between the experiment chamber and the fan a divergent orifice forming a diffuser. This diffuser has a diameter equal to 2 meters at the outlet from the chamber; it connects with the ring of a helicoidal fan of 3.8 meters diameter (12.46 ft.), providing for the flow of the air a useful section of 9 square meters (96.9 sq. ft.). The reduction of velocity which is produced by passing through the diffuser, as a result of the progressive increase in diameter, raises the pressure of the air by a certain quantity and diminishes correspondingly the power which must be furnished to the fan in order to bring the air to atmospheric pressure.

The measure of the total resistance of the air is made in the experiment room by means of a balance, into the detail of which we cannot here enter.

The pressures exerted on each point of the body subjected to the action of the current of air are determined by means of orifices of very small diameter fixed normally to the surface at various points of the body and connected with manometers.

This installation likewise provides for determining, with reduced models of screw propellers, the thrust of the propeller and the power required on the shaft. By means of a small electric motor the propeller is turned in the cylinder of air produced by the fan. It is assumed that, by this means, the same conditions are realized as though the propeller itself advanced through the air.

The propeller models have a diameter which does not exceed 1 meter (3.28 ft.). In a cylinder of air of 2 meters (6.56

ft.) diameter, the propeller model is thus surrounded by a mass of air sufficiently thick to represent action in an indefinite medium.

3. The Aerotechnic Institute of Saint-Cyr.

The Aerotechnic Institute of Saint-Cyr was created by M. Henri Deutsch de la Meurthe, who gave it as a gift to the University of Paris. Its purpose is to follow lines of research, both theoretical and practical, tending to the improvement of the means of aerial locomotion in all its forms, these researches being carried out under conditions as nearly as possible similar to those actually in practice.

In order to realize this program, there was constructed on the level, a railway 1350 meters in length (4428 ft.), on which are operated special cars.

The car for the tests of surfaces and of aeroplanes is an electric tractor with normal gage.

The principal characteristics are as follows:

Weight, not equipped, 5 tons
Length, 6 meters (19.7 ft.)
Width, 2 meters (6.56 ft.)
Height, 1.10 meters (3.61 ft.)

The current is taken by lateral shoes sliding on conductors placed on either side of the line.

The motor is of 130 hp. capacity, separately excited. It is geared to 2 intermediate shafts, upon which are placed pinions which transmit the movement to the forward and rear axles by Renold chains. All the shafts of the motor and axles are provided with roller bearings.

The brake is applied electrically, with a safety provision, by means of shoes at the rear, engaging at the end of the line on a sliding way.

The control is exercised from an operating cab by means of a controller and an adjustable automatic accelerator.

The maximum velocity of the car is about 20 m. (65.6 ft.) per second.

The car is furnished with a special mounting providing for registering the following items:

(1) The vertical component force or lift.

(2) The horizontal component force or drift; (these together define the resistance of the air in magnitude).

(3) A rotating couple, from which, with the preceding, may be derived the location of the resistance considered as a single force.

The relative velocity of the body under trial with relation to the air is determined by measuring the absolute velocity of the car with reference to the ground and adding or subtracting the velocity of the wind according to the direction of the line on which the car runs.

The absolute velocity of the car with reference to the ground is measured by means of a registering speed instrument giving directly the revolutions of an axle. Furthermore, there is installed along the line a system of electric contacts inscribing points of reference on the cylinder of a precision chronograph. This cylinder permits a measurement (to 1/200 second or to 1/10 second) of the time required by the car for traversing a known distance—95.9 meters exactly (314.55 ft.).

In order to have the correction due to the wind, measurement is made, at a fixed point on the line where the tests are made, of the magnitude and direction of the wind. The velocity of the wind is measured by an anemocinemographe, which is extremely sensitive [20 millimeters (0.788 in.) for 1 meter (3.28 ft.) per second velocity]. The direction of the wind is measured by a self-registering wind vane. Furthermore, the correction for the wind cannot be made with satisfactory rigor unless the average velocity of the wind is at least equal to 2 meters (6.56 ft.) per second.

A car of the same type as the preceding, but more robust, serves for the study of an entire aeroplane. These experiments, still in an introductory stage, have been carried out on a two-passenger machine of the Blériot type. The characteristics of this monoplane are as follows:

Tail plane (pigeon tail).
Span, 11.10 meters (36 ft.)
Length, 9 meters (29.5 ft.)
Surface of the wings, 25.35 sq. meters (272.8 sq. ft.)
Angle of the chord of the wings with the tail plane, 6°.

The ensemble of this apparatus was studied for 3 positions of the depth rudder:

(a) Rudder in the prolongation of the tail plane.

(b) Rudder turned 18° downward with reference to the tail plane.

(c) Rudder turned 51° upward with reference to the tail plane.

Experimental speeds 15 to 18 meters (49.2 to 59 ft.) per second [54 to 65 kilometers (33.5 to 40.4 mi.) per hour].

A special car serves for the study of propellers.

The propellers are full sized. They are mounted on the special car which they serve to propel. This car carries a framework which makes it possible to carry the propeller at a distance from the car itself and to operate the propeller as though it were placed in an indefinite medium. On the car is an 80-hp. motor which operates the propeller shaft by means of a transmission similar to that which is found on dirigible balloons.

The axles of the car are free and the speed of the car is due solely to the pull of the propeller. A lever brake is provided which is applied by the operator who rides on the car. This brake is, furthermore, similar to that which is used on the car for testing surfaces. The control of the car is carried out from an operating cab similar to that for the car previously described.

The return of the propeller car is obtained by running the propeller backward at reduced speed in order to avoid undue strain. The pull of the propeller is measured by means of a dynamometer inserted between a movable bar articulated at its base and the fixed framework of the car.

The power absorbed by the propeller is measured in 2 different ways:

(a) By means of a Wattmeter registering the electric power required by the motor.

(b) By means of a transmission dynamometer registering the couple required to drive the propeller.

These two pieces of apparatus are standardized by means of a Renard brake, which is attached to the shaft in place of the propeller.

The velocity of the car is determined by the same 2 methods as above noted for investigating surfaces.

The number of revolutions of the propeller is measured by means of a registering counter.

The relative velocity is obtained by making a correction for the wind, the same as in the case for surfaces.

The velocities realized have not exceeded 20 meters (65.6 ft.) per second.

The Aerotechnic Institute has undertaken to make a series of tests on aeroplanes in free flight.

M. Toussaint, assistant director of the Institute, has carried out the following investigations:

First, on a Maurice Farman biplane, piloted by Captain Etévé.

Second, on a Blériot monoplane, piloted by Lieut. Gouin.

The following items of equipment were installed.

(1) A recorder of relative velocity giving the speed of the aeroplane relative to the air.

(2) A registering wind vane giving the inclination of the wind to the chord of the planes.

(3) A registering clinometer giving the longitudinal inclination of the aeroplane relative to the horizontal.

(4) A registering barograph, very sensitive up to 500 meters.

(5) A registering revolution counter giving the speed of the motor.

(6) A register of the movement of the depth rudder.

(7) A register of the warping of the planes.

All these registering instruments, except the revolution register, are provided with cylinders of such proportions as to give a length of diagram of 292 millimeters (11.5 in.) in 26 minutes, that is, 11.2 millimeters (0.442 in.) per minute. With this velocity of movement of the record one may judge the periods of steady conditions exceeding 10 to 20 seconds duration. Quantitative measures cannot be properly drawn from periods of steady condition having less than this duration.

In order to assure a perfect agreement in time between the different diagrams, or, in other words, in order to be per-

fectly sure that the points taken as corresponding do indeed relate exactly to the same instant of flight, each register is provided with a supplementary pen moved by an electro-magnet. Throughout the course of the flight, the pilot by closing the circuit at sufficiently close intervals causes these pens to register simultaneously on all the diagrams.

The reference points thus traced are all in synchronism, and thus provide an assurance of perfect accord for measurements made in the vicinity of these points.

In order to protect the instruments from vibrations and shocks, they are provided with elastic suspension in their cases.

We shall not enter into the details of the description of these various instruments. We note simply that the register for velocity relative to the air, as well as the direction vane, should be placed in such manner as to avoid the turbulence produced by the propeller, the planes, and the fuselage.

The register for the movements of the depth rudder and for the warping of the planes, was installed on the Blériot. This gives on one cylinder the movements of the handwheel barrel. It comprises simply a system of axes with tracing points, parallel between themselves and perpendicular to the axis of the registering cylinder. Each one of these axes carries, on the one hand, a lever connected to the barrel by a wire, and, on the other hand, a stylus or marking pen. A return spring fixed on the lever serves constantly to maintain the wire under tension. This wire is attached to the barrel at the same point as the cable which operates the corresponding control; it passes over little pulleys and is thus carried to the register. The movements of the stylus for the position of the barrel corresponding to horizontal flight and to various inclinations of the depth rudder are marked on the register, the axis of the propeller in repose being horizontal. Similarly reference marks are determined in repose for the movements of the stylus registering the warping movements of the planes. In the apparatus of the Institute the needle rises when the barrel is carried to the left; it descends when it is carried to the right.

The Aerotechnic Institute possesses also an installation for the study of small models by means of a fan. The fan absorbs 120 hp., providing for a flow in an experimental section of 2

m. (6.56 ft.) diameter of a current of air of 40 m. (131.2 ft.) per second or 144 km. (89.4 mi.) per hour. The total delivery amounts to 125 cu. m. (4412 cu. ft.) per second. This apparatus is under trial.

There is also at the Institute of Saint-Cyr a covered installation for the study of small models. The diameter of the rotunda is equal to 38 m. (125 ft.). The turning arm is about 16 m. (52.5 ft.) in length. The volocity at the extremity is 90 to 95 km. (56 to 59 mi.) per hour.

4. The Laboratory of M. de Guiche.

M. de Guiche has instituted a systematic series of experiments by the method of displacing the body under investigation in quiet air.

The body (use so far has been made of plates in various forms) is carried by an automobile. Two vertical pillars fixed to the machine carry at their upper extremities a horizontal axis on which are placed the various plates under investigation. These plates are provided at their lateral extremities with two graduated half circles, which, by means of a needle carried by each pillar, serve to measure their inclination relative to the line of movement. The pillars are of sufficient height and so placed that the turbulence produced by the automobile itself is not felt in their neighborhood. In particular, M. de Guiche has found it advantageous to carry the mounting on the rear of the automobile rather than on the front. The wheels and the body throughout are, furthermore, suitably shielded in order to diminish turbulence.

M. de Guiche thus carries out a sort of topographical measure of the pressures exerted on the different points of the plates both on the front and rear sides.

As we have seen previously, M. Eiffel likewise employs this method. But he determines separately the pressures at the different holes and measures each time the velocity of the current of air by means of a Pitot tube. As this velocity is somewhat variable, the pressures are reduced to what they would be if the velocity were constantly equal to 10 m. (3.28 ft.) per second.

But in operating this by successive observations, there is

danger of finding between the determinations marked discordance.

Therefore, M. de Guiche determines at the same time, and by a single experiment, the pressures at selected points in as large a number as possible. To this end the plates which are to serve for the experiment are pierced, each with holes forming two series of lines cutting each other at right angles (for planes, lines at the maximum slope and horizontal lines). In a single experiment, and at the same instant, the pressures in all these points of the several lines are measured.

To this end, 20 orifices ending at these holes on the various lines are provided with 20 rubber tubes connecting them with 20 little manometers. These manometers are mounted side by side in a frame before a glass provided with transverse divisions in half millimeters.

The indications of all these manometers are inscribed at any given instant by placing them in a photographic chamber where the atmospheric pressure acts upon their open ends. By lighting the interior of the chamber with electric lamps, there is readily produced on a photographic plate the levels of the liquid in the different manometers.

It may be asked if the pressure of the atmosphere actually prevails in the interior of the photographic chamber. The latter cannot, in effect, be perfectly tight, if it is not desired that it should operate as an air thermometer. It is then possible that during the movement of the automobile, currents of air passing through small apertures of the photographic chamber may tend to produce a variation of pressure within. M. de Guiche has assured himself by many experiments that this effect is entirely absent and that atmospheric pressure prevails throughout the interior of the photographic chamber.

At the Institute of Saint-Cyr, M. Maurain, who has employed the manometric method, undertook to establish in spite of the perturbations caused by the movement of the vehicle, the atmospheric pressure on the open part of the manometers which he uses for measuring pressure. To this end the open part is connected to a space, completely tight, which communicates with the outside air by means of a tube placed at the extremity of an antenna. The latter is placed quite far from

the surface in order to escape variations of pressure which are produced in its vicinity [2.3 m. (7.54 ft.) in front of the surface under investigation and 3.35 m. (10.9 ft.) above the body of the car]. At the extremity of this antenna is a tube of which the useful part is horizontal and cylindrical and is terminated by a pointed closed cone pointing in the direction of movement. In the cylindrical and lateral part of the tube are formed small circular openings of 1 millimeter (0.04 in.) in diameter which place it in communication with the atmosphere. M. Maurain has assured himself that this tube placed in a current of air of 20 m. (65.6 ft.) per second approximately parallel to the current assumes indeed the pressure of the atmosphere.

The pressures thus determined directly are reduced to the values which they would have at a velocity of 10 m. (32.8 ft.) per second. Curves of equal pressure may then be traced, thus indicating the condition of the surface of the body and showing the distribution of pressure over the same.

Furthermore, the surface of the body is divided into strips of a certain width. By a calculation of averages, the mean pressure is determined for each strip. Multiplying this by the surface of each strip, we have the resistance exerted by the air on the given strip. As the surface of the body under investigation is perfectly smooth, the friction of the air on such surface may be neglected. The force determined is then normal to the surface of the body. By combining these forces by the well-known methods of graphical statics, the resistance of the air over the entire plate may be obtained in magnitude and location.

Finally, in the experiments of M. de Guiche the automobile should move through a mass of air motionless as a whole. To this end the experiments are made at certain hours on favorable days over a road traversing a forest. The road is about 30 m. (98.4 ft.) wide and is bordered with small brush. The straight part in which the measures are taken is terminated at its two ends by easy turns. There is thus avoided the establishment of a regular current of air along the axis of the road.

The velocity of the automobile relative to the ground is measured, correcting it, if necessary, for the component of the wind along the direction of motion.

5. The Laboratory of Chalais-Meudon and the Experiments of M. le Commandant Dorand.

The aerotechnic laboratory of Chalais-Meudon is celebrated throughout the entire world by reason of the work of Colonel Charles Renard. It is there that were made the studies which have brought the solution of the problem of the dirigibility of balloons. It is there that have been established by precision experiments some of the fundamental laws of air resistance. It is there, finally, that were made certain experiments by Captain Ferber, experiments which should soon lead to the French solution of the problem of aviation.

M. le Commandant Dorand has brilliantly continued the labors of these eminent predecessors. The experiments made here on air propellers have carried a long step forward this complex question.

They were made on propellers of normal size by means of the car method, which was later applied at the Institute of Saint-Cyr.

The propeller to be tested is mounted on a car moving on a railroad. This car carries a dynamo shunt excited, by means of which the propeller is turned at a constant speed. On the same car are placed registering apparatus for thrust, speed of car, speed of rotation, and power absorbed.

The railroad, of 1 meter gage (3.28 ft.), on which moves the dynamometer car, has for half of its length a uniform grade. It is prolonged by a level run and then by an ascent, destined to diminish the velocity of the car before application of the automatic brakes. There is utilized in this manner the weight of the equipment, the effect of which added to the propulsive effort of the propeller gives rapidly to the vehicle a high velocity, and brings it back to the point of departure after the experiment. The current intended for the electric motor is brought by two insulated rails, on which move sliding shoes of bronze similar to those which are used for electric railroads.

In order to obtain a constant electric resistance in the circuit, no matter where the car may be on the track, the current is brought to the rails at two opposite extremities. By this means the instruments for the measuring of electric quantities may be located at a fixed point and not on the vehicle.

The energy is transmitted to the propeller shaft by means of a chain.

In order to measure the tractive pull of the propeller there is carried at the end of the propeller shaft (turning in roller bearings) a roller thrust bearing which transmits the tractive effort to a manometric cell. A registering dynamometer thus gives at each instant the thrust of the propeller.

The power absorbed by the propeller is obtained by means of indications furnished by an ammeter and a voltmeter of the recording type, previously standardized for the different speeds of the motor by the aid of a Renard brake.

Chronographs indicating the origin of time are mounted on each of the registering equipments and are put in movement automatically at the same moment.

The part of the apparatus provided for the measuring of the propeller thrust is movable relative to the car. It results that the tractive effort directly measured represents the algebraic sum of the following forces:

(a) Tractive effort on the level;

(b) $+ph$, p being the weight of the moving system and h the change of level per meter run;

(c) Inertia $= -\frac{p}{g}\frac{dv}{dt}$, g being the acceleration due to gravity, and $\frac{dv}{dt}$ the acceleration of the motion of the car.

The tractive effort on the level, which interests us here, is then equal to the tractive effort measured directly, diminished by ph and augmented by $\frac{p}{g}\frac{dv}{dt}$. For an acceleration which remains near 0.8 meter second (2.6 ft. per sec.), this last correction is

$$p \times \frac{0.8}{9.81} = 0.0815\,p.$$

As p is always less than 60 kg. (132 lb.), this correction is about 5 kg. (11 lb.)

The maximum speed of the dynamometer car has been, in these experiments, equal to 14.6 meters (47.9 ft.) per second.

M. le Commandant Dorand made, at the military aerodrome of Villacoublay, numerous trials with a biplane of his construction, and piloted by Labouchère.

This flying laboratory is a biplane with planes stepped

toward the front; it is provided with a motor of 60 hp., with tractor propeller in front.

During a horizontal flight, the following measures were made:

(a) Thrust of the propeller
(b) Speed of rotation of the propeller shaft or of the motor
(c) Speed of the aeroplane relative to the air
(d) Angle of incidence of the planes

The measures are instantaneous. At the desired moment in horizontal flight, the pilot presses on a button and thus determines the registration of all the measures to be made.

The frame of the motor is mounted in a dynamometer balance on a shaft carried on roller bearings. The moment of the thrust of the propeller relative to this axis is balanced by that of two hydraulic cells. Recording manometers give the pressure at the cells and thus furnish, through the lever relation, the thrust of the screw itself. The recording drums are set in motion at the instant of start of the aeroplane; chronograph markers moved electrically indicate on each sheet the precise place where the reading is to be made.

The action of the air on that part of the balance comprising the motor and its supports gives rise to a force which must be added to that which is measured, if it is desired to know the true thrust of the propeller. In order to make this correction, the entire system without the propeller is placed in a current of air. The velocity of this is measured as well as the resistance which it develops.

The measure of the thrust of the propeller gives the resistance of the aeroplane at any given instant of its horizontal flight.

In order to measure the speed of rotation of the motor, there is mounted on the shaft a cylinder of ebonite covered over half its circumference with a sheet of copper. Two brushes installed in the circuit of an electric chronograph rest on this cylinder. At each revolution of the motor there is an interruption of the current and hence a jog on the chronograph sheet.

The measure of the relative velocity through the air is made by means of a Venturi tube. We may note here that the operation

of this apparatus has been made, at the Aerotechnic Institute of Saint-Cyr, the subject of a very careful and systematic investigation.

The angle of incidence is obtained by means of a clinometer formed by a pendulum dampened in glycerine. A pointer which moves over a scale indicates at each instant the angle of the chord of the planes with the horizon.

Experiments in gliding flight have also been made with this equipment. They require the knowledge of the gradient of the path during the glide, or the angle of the relative air movement with the horizon. This item is furnished by means of a vane with horizontal axis.

6. The Aviation Laboratory of Vincennes and the Experiments of Captain Olive.

The Ministry of War has instituted, under the charge of the Artillery School at Vincennes, a laboratory which is specially concerned with researches in aviation.

Among the investigations carried out in this laboratory, we should note here the measurements made by Captain Olive on aeroplanes of normal dimensions. The principle of the method was as follows:

Let us consider a body rigidly suspended from a trolley which rides on a rectilinear inclined cable. Let us assume that the body possesses a plane of symmetry which also contains the cable. The body under investigation, descending along the cable in such manner that its plane of symmetry is displaced parallel to itself, is subjected, at each instant, to the following forces:

(1) The action of gravity applied at the center of gravity.

(2) The resistance of the air applied at a point which we may designate by ρ.

(3) The force of inertia applied at the center of gravity.

These forces may be decomposed parallel and perpendicular to the cable. The components of the weight are opposed to those of the resistance of the air; those of the force of inertia are parallel to them.

Graphic record is made of the magnitude of the components parallel and perpendicular to the cable. When the system is in a state of rest, the weight acts alone. The mode of recording thus provides for the elimination of the effects due to gravity.

The body under investigation is allowed to descend along the cable, with the trolley, to which it is rigidly attached. At a given moment the acceleration, a, of the system is measured and record is made of the components of the resistance of the air and of the force of inertia.

The acceleration a is measured in the following manner: When a pendulum is mounted on a support which, itself, is given a movement of translation with an accelerated velocity, it tends to place itself at each instant in a position such that the angular deviation from the vertical is connected with the acceleration a by the equation

$$\beta = \frac{a}{g}$$

The angle β is, in general, quite small. This principle has been realized in the following manner:

A car moves on an aerial monorail formed by a cable stretched between two posts. The aeroplane under investigation is suspended from this car by means of a bar to which it is attached by means of a network of wires forming triangles, thus giving the equivalent of a rigid connection in every direction. In order that these wires may remain under tension during the experiment, it is necessary that the weight of the aeroplane shall be greater than the upward thrust received from the air during the movement.

The bar connecting with the car is attached thereto by means which transmit separately to dynamometer springs, on the one hand, the forces normal to the cable, and, on the other, the forces parallel to the cable. The movements of the springs are recorded on a moving cylinder.

The cable on which the car rolls shows a general inclination in such manner that the movement of the apparatus may be produced by the action of gravity.

The experiment should be carried out in a part of the cable where the inclination is practically constant in order to avoid the need of taking account of the varying components of gravity and of the force of inertia produced by the curvature of the cable.

At Vincennes the cable, which is 155 m. (508 ft.) long, is carried by two pillars which are installed, one on the summit of

a hill of about 20 m. (65.6 ft.) height, the other on the crest of an embankment. The maximum deflection of the cable varies between 1.4 m. (4.6 ft.) without load to 5 m. (16.4 ft.) for a load of 1000 kg. (2204 lb.) placed at the center, the tension remaining constant. The general slope is 12%. In the experiments, the weight carried was 700 kg. (1543 lb.) and the maximum velocity realized was 12 meters per second (39.4 f.s.).

7. The Experiments of Commandant Lafay at the Physical Laboratory of the Polytechnic School.

Commandant Lafay has installed in the physical laboratory of the Polytechnic School the apparatus previously used by M. Rateau. He has utilized this apparatus in order to solve, often in an elegant manner, a series of interesting problems in aerodynamics. For example, he has proposed to make visible the paths of air stream lines which surround solid bodies of different forms placed within a cylinder of air issuing from the discharge orifice of a fan.

The methods which give the total resistance of the air enable us generally to determine separately the lift and the drift. From these we may then find the ratio of support, which is nothing but the ratio of the lift to the drift. As a matter of fact, in a horizontal flight, the smaller this ratio, the greater the weight carried by a given effort of propulsion. If we call ϕ the angle of the lift with the total resistance, the relation of the drift to the lift is equal to tang. ϕ. By reason of the importance of this angle, which Commandant Raibaud of the aviation laboratory at Vincennes proposed to call the angle of support, M. Lafay has constructed an apparatus by which it can be determined directly without going through the determinations of the lift and drift.

He has operated on different stuffed birds and has tried to determine the value of this ratio of support for these birds.

He has been brought to the conclusion that a stuffed bird behaves, on the whole, as a mediocre flyer, certainly inferior to one of our good monoplanes.

These experiments which have dealt with stuffed birds, cannot, with certainty, be extended to living birds. However, this result leads us to admit only with reserve the statements of those

who claim that birds are perfect flyers, presenting for the angles of attack which they utilize ratios of support far superior to those of our apparatus.

M. Lafay has set himself another problem which is very important in regard to the practice of aviation.

The experiments made with models of wings or of aeroplanes are, as a general rule, exclusively static. The wind of the blowing apparatus, whose action is utilized, is maintained in a constant state during the period of each observation. Now, when an aeroplane moves through the air, it is subject on the part of the air to actions which vary quite rapidly not only in intensity but also in direction. Although the inertia of an aeroplane prevents it from obeying all these instantaneous forces, it may be questioned if the static experiments of the laboratory can be applied without restriction to machines in practice. M. Lafay has striven to give a few indications regarding this question. He has tried a few dynamic experiments; i. e., he has tried to study the variable forces produced by a wind which changes rapidly its direction or its intensity.

The experimental study of this problem presents great difficulties, due chiefly to the disturbing actions of inertia. In order to avoid them he was led to build models as light as possible, attached to elastic carriers, and to make use of the deformations of these carriers in order to measure the forces. But if these deformations are to be very slight in order that the energy acquired by the system be negligible, they must, however, be sufficiently great and sufficiently regular to permit of arriving, by means of an appropriate optical amplification, at a correct evaluation of the forces which produce them. The results of this amplification must be such that they can be registered photographically on account of the rapidity of evolution in the phenomena under investigation. Finally, the model and its elastic support would not fail to take on a vibratory movement under the action of the inevitable irregularities of the blowing apparatus, except for the precaution of adding just enough dampening to make the apparatus practically aperiodic, without, however, retarding too much its dynamic indications.

M. Lafay has produced an aerodynamometer capable of satisfying these contradictory conditions.

These experiments have been interrupted by the war. However, from those which have been made it seems to be proven that for changes of speed and direction having the degree of rapidity of those which may normally take place in aviation, the resistance of the air at a given moment has a value little different (10% at the most) from that which one would obtain in permanent regime, keeping invariable the conditions which characterize, at the instant under consideration, the movement of the avion relative to the air.

Consequently, we can deduce from static experiments, properly directed, the elements which are necessary for the calculation of the forces sustained by a machine in given circumstances, as, for example, those which accompany its rapid righting after a diving flight, or its entrance into an ascending or descending current of air.

8. Aerodynamic Studies Performed in other Laboratories.

A certain number of aerodynamic experiments have been made in other laboratories.

Mention may be made of the experiments on propellers at a fixed point performed by M. Auclair in the experimental laboratory of the Conservatoire des Arts et Métiers. This young savant was the first to give precise results on the influence of the back of the blades, an influence which had been noted as early as 1900 by M. Rateau.

L'Institute Marey, in the Parc des Princes, is continuing the fine studies of Marey on the flight of birds.

M. Houssaye, in his laboratory of L'Ecole Normale Supérieure at Paris, is studying the resistance of water on the forms of fishes.

M. Magnan, in the laboratory of l'Ecole des Hautes Etudes at the Sorbonne, is trying to deduce from the study of the dimensions of birds some coefficients which will be useful for the construction of aeroplanes.

CHAPTER III.

DIAGRAMS REPRESENTING THE RESULTS OF EXPERIMENTS.

1. Proposed Notations.

Let us consider a reduced size model of the body under investigation. Let λ be the ratio of the homologous linear dimensions taken in the body and in the model.

Let us suppose that the model is tried at a relative velocity V and that the results of the experiments are reduced to what they would be for a velocity V_1. If r_{V_1} and r_V are the actions of the air on the model at speeds V_1 and V, we have the relation

$$\frac{r_{V_1}}{r_V} = \left(\frac{V_1}{V}\right)^2 \quad \ldots\ldots\ldots \quad (1)$$

On the other hand, let us take the body under investigation. Let V be its velocity relative to the air, and suppose that the actions of the air are reduced to what they would be if the velocity had the value V_2. Denote by R_V and R_{V_2} these values of the resistance of the air. We have the relation

$$\frac{R_{V_2}}{R_V} = \left(\frac{V_2}{V}\right)^2 \quad \ldots\ldots\ldots \quad (2)$$

The relations (1) and (2) give:

$$\frac{R_{V_2}}{R_V} \times \frac{r_V}{r_{V_1}} = \left(\frac{V_2}{V_1}\right)^2 \quad \ldots\ldots\ldots \quad (3)$$

But since r_V and R_V are relative to the model and to the body under investigation at the same speed V, we have

$$\frac{r_V}{R_V} = \frac{1}{\lambda^2} \quad \ldots\ldots\ldots \quad (4)$$

Carrying this value into (3) we have

$$\frac{R_{V_2}}{r_{V_1}} = \lambda^2 \left(\frac{V_2}{V_1}\right)^2 \quad \ldots\ldots\ldots \quad (5)$$

In experiments in aerodynamics the values usually taken are $V_1 = V_2 = 10$ m. per sec. (32.8 ft. per sec.). Measure is then taken of r_V on the model or R_V on a body of normal size. Equations (1) and (2) then give

$$r_{10} = r_V \left(\frac{10}{V}\right)^2 \quad \ldots\ldots\ldots \quad (6)$$

$$R_{10} = R_V \left(\frac{10}{V}\right)^2 \quad \ldots\ldots\ldots \quad (7)$$

The methods for the measurement of r_V give at the same time:

(a) The component of r_V along the direction of relative air movement

(b) The component of r_V normal to the direction of relative air movement.

With M. Eiffel, let us call r_x and r_y, F_x and F_y the components of r_{10} and R_{10} along and normal to the direction of relative air movement, respectively.

We have then the relations:

$$r_x = \text{component of } r_V \text{ along direction of relative air movement} \times \left(\frac{10}{V}\right)^2 \quad . \quad . \quad . \quad . \quad . \quad . \quad . \quad . \quad . \quad . \quad (8)$$

$$r_y = \text{component of } r_V \text{ along normal to direction of relative air movement} \times \left(\frac{10}{V}\right)^2 \quad . \quad . \quad . \quad . \quad . \quad . \quad (9)$$

$$F_x = \text{component of } R_V \text{ along direction of relative air movement} \times \left(\frac{10}{V}\right)^2 \quad . \quad . \quad . \quad . \quad . \quad . \quad . \quad . \quad . \quad . \quad (10)$$

$$F_y = \text{component of } R_V \text{ along normal to direction of relative air movement} \times \left(\frac{10}{V}\right)^2 \quad . \quad . \quad . \quad . \quad . \quad . \quad (11)$$

We may note that $r_x V^2$, $r_y V^2$, $F_x V^2$ and $F_y V^2$ are quantities of the order of force.

M. Eiffel, in his experiments on models of aeroplanes, takes $V_2 = 1$ met./sec. $= 3.28$ ft./sec. and $V_1 = 10$ met./sec. $= 32.8$ ft./sec.

Equation (5) then gives

$$\frac{R_1}{r_{10}} = \left(\frac{\lambda}{10}\right)^2 \quad . \quad . \quad . \quad . \quad . \quad . \quad . \quad . \quad . \quad . \quad (12)$$

M. Eiffel calls R_x and R_y the components of R_1 along and normal to the direction of relative air movement.

We have then

$$\left.\begin{aligned} R_x &= r_x\left(\frac{\lambda}{10}\right)^2 \\ R_y &= r_y\left(\frac{\lambda}{10}\right) \end{aligned}\right\} \quad . \quad . \quad . \quad . \quad . \quad . \quad . \quad . \quad (13)$$

R_x and R_y are quantities of the same order as r_x and r_y.

If the model of the aeroplane is on a scale 1/10, $\lambda = 10$ and we have

$$\left.\begin{aligned} R_x &= r_x \\ R_y &= r_y \end{aligned}\right\} \quad . \quad . \quad . \quad . \quad . \quad . \quad . \quad . \quad . \quad . \quad (14)$$

The numerical values calculated for the model apply directly to the aeroplane of normal size.

When the problem involves the wings of aeroplanes, M. Eiffel places

$$\left.\begin{aligned} K_x &= \frac{\text{component of } r_V \text{ along direction of relative air movement.}}{S\,V^2} = \frac{r_x}{S \times 10^2} \\ K_y &= \frac{\text{component of } r_y \text{ along normal to direction of relative air movement.}}{S\,V^2} = \frac{r_y}{S \times 10^2} \end{aligned}\right\} \quad (15)$$

$$K_i = \sqrt{K_x^2 + K_y^2} \quad . \quad . \quad . \quad . \quad . \quad . \quad . \quad . \quad (16)$$

In this equation i is the angle between the direction of relative air movement and a reference line attached to the wing, generally the chord of the profile of the wing in its plane of symmetry.

K_x, K_y, K_i are quantities of the order of density.

S should be a mean between the surface of the wing exposed directly to the action of the air and the surface on the back. Builders of aeroplanes usually consider S equal to the greatest projection of the wing on a horizontal plane.

2. Study of the Wings of an Aeroplane. Polar Diagrams of M. Eiffel.

M. Eiffel represents the properties of the wings of an aeroplane by means of what he calls simple polar diagrams.

On two rectangular axes, he plots as abscissae the values of K_x and as ordinates the values of K_y, the same scale being used for both. The curve thus traced in the K_x K_y plane is called the "first simple polar". A point of the curve corresponds to a determinate value of the angle i. The radius vector from the origin to this point represents the quantity K_i. The angle of this radius vector with the axis of K_y is the angle between the resistance of the air and the normal to the direction of relative air movement. If this angle is denoted by θ we have

$$\text{tang. } \theta = \frac{K_x}{K_y} \quad . \quad . \quad . \quad . \quad . \quad . \quad . \quad . \quad . \quad (17)$$

The tangent drawn from the origin to the polar gives the value of θ, θ_m, for which the ratio $\frac{K_x}{K_y}$ is a minimum.

To each point of the curve corresponds a value of the angle i and a value of the angle θ. If $\theta = i$ the resistance of the air is normal to the chord of the profile; if $\theta < i$, the resistance of

the air is forward of the normal to the chord. For $\theta > i$ it falls behind the chord.

This mode of representation (K_x and K_y represented to the same scale) is not suitable for the values of the angle i corresponding to the small values employed in aviation. In fact, for these values of the angle i the polar diagram approaches very close to a straight line slightly inclined to the axis of K_y. The comparison of one wing with another by simple superposition of diagrams is a delicate operation. In particular it is almost impossible to compare the wings regarding the minimum value of $\frac{K_x}{K_y}$.

Accordingly, M. Eiffel constructs what he calls the "second simple polar". He takes for K_x a scale 5 times larger than for K_y. In this mode of representation, a vector joining the origin with a point on the curve is no longer equal to K_i, and the angle of this vector with the axis of K_y is no longer the angle θ. However, the same as for the small values of i, less than 10°, K_i is very little different from K_y, and for the values K_i the ordinates of the new curve may be taken. It is convenient to add to this curve a scale representing values of $\frac{K_x}{K_y}$. On a parallel to the axis of K_x, passing through a point of K_y, values are plotted of $\frac{K_x}{K_y}$ corresponding to one of the intersections with the new curve of the radius vector starting from the origin and ending at this point. Let us call this line the axis of $\frac{K_x}{K_y}$. In order that $\frac{K_x}{K_y}$ may correspond to an angle i, it is necessary that the vector just named should cut the second polar curve. The minimum value of $\frac{K_x}{K_y}$ is then given by the point where the tangent from the origin to the polar curve meets the axis of $\frac{K_x}{K_y}$.

3. Study of the Horizontal Movement of an Aeroplane. The Logarithmic Polar Curve.

In order to study the horizontal movement of an aeroplane, M. Eiffel has pointed out a very ingenious representation, to which he has given the name of logarithmic polar.

Let us consider a model of an aeroplane and let i be the angle made between the direction of relative air movement and

a straight reference line intimately connected with the apparatus, for example, a straight line doubly tangent to the lower part of the principal planes, near the fuselage. To this value of the angle i, the experiment on the model will give corresponding values of the resistance of the air, of which the projections parallel and perpendicular to the air movement are r_x and r_y. To these, equations (13) serve to give the corresponding values of R_x and R_y relative to an aeroplane of full size.

Furthermore, let

Q = the weight of the actual aeroplane.

P = the power required to maintain horizontal flight with a relative velocity V.

The equations

$$\left.\begin{aligned} P &= R_x V^3 \\ Q &= R_y V^3 \end{aligned}\right\} \quad \ldots\ldots\ldots \quad (18)$$

define the correlative values of P, Q, V, R_x and R_y, and hence of the angle i which corresponds to the horizontal flight of an aeroplane of determinate form (especially of an aeroplane in which the depth rudder occupies a determinate position) when the axis of the propeller is parallel to the path of flight.

Let us consider such an aeroplane.

Equations (18) give immediately

$$\left.\begin{aligned} \log. R_x &= \log. P - 3 \log. V \\ \log. R_y &= \log. Q - 2 \log. V \end{aligned}\right\} \quad \ldots\ldots \quad (19)$$

or

$$\left.\begin{aligned} \log. R_x &= \log. P - \frac{3}{\sqrt{13}} \times \sqrt{13} \log. V \\ \log. R_y &= \log. Q - \frac{2}{\sqrt{13}} \times \sqrt{13} \log. V \end{aligned}\right\} \quad \ldots\ldots \quad (20)$$

The experiments on a model permit, for various values of i, the determination of corresponding values of R_x and R_y.

On two rectangular axes let us plot to the same scale, on the axis of abscissae, distances proportional to the various values of log. R_x; on the axis of ordinates, distances proportional to the various values of log. R_y. We shall thus obtain in the plane of the axes a curve to which M. Eiffel has given the name of logarithmic polar. Each point on this curve corresponds to a determinate value of the angle i which is inscribed on the curve.

Let us consider a vector OM_i running from the origin O to

a point M_1 on the curve. This vector has for projections on the axes of coordinates the values log. R_x and log. R_y. But equations (20) show that this vector is the resultant of a broken line of which the vectors are

log. P directed along the axis of log. R_x.
log. Q directed along the axis of log. R_y.

$\sqrt{13} \times$ log. V directed in the third angle of the coordinate planes ($-$ log. R_x, $-$ log. R_y), and making with the axis of log. R_x an angle of which the cosine is equal to

$$-\frac{3}{\sqrt{13}} \text{ (See Fig. 1.).}$$

If the two extremities, O and M_1, of the broken line are preserved, the segments may be run through in any order whatever. Thus, for example, we may have any one of the following orders:

log. P, $\sqrt{13} \times$ log. V, log. Q;
log. Q, log. P, $\sqrt{13} \times$ log. V;
$\sqrt{13} \times$ log. V, log. Q, log. P;

It is well known that starting from the point O one should, following the broken line, end at a point M_1 of the logarithmic polar. The directions of the vectors are, furthermore, well known. If we take two of the vectors of the broken line, the trace of this line permits immediately the determination of the third.

We may thus solve graphically by means of the logarithmic polar a series of problems relating to the horizontal flight of an aeroplane when the axis of the propeller is parallel to the path. We might, for example, desire to know what weight should be given to the apparatus in order to obtain a given velocity with a given power.

In this problem the vectors log. P and $\sqrt{13} \times$ log. V are known in magnitude and direction; it is easy to trace them. From the extremity of the vector $\sqrt{13} \times$ log. V there is drawn a straight line parallel to the axis of log. R_y, which is continued to its point of intersection with the logarithmic polar. The vector log. Q is thus constructed; it gives the weight Q which is sought. At the same time, the point of intersection of this vector with the polar curve determines the angle i of the flight.

Let us now consider a velocity V_o which is, for example, the normal actual velocity of the aeroplanes [100 kilometers (62.1 mi.) per hour]. Then equations (18) may be written

$$\left.\begin{aligned}\frac{P}{V_o^3} &= R_x\left(\frac{V}{V_o}\right)^3\\ \frac{Q}{V_o^2} &= R_y\left(\frac{V}{V_o}\right)^2\end{aligned}\right\} \quad \ldots\ldots\ldots \quad (21)$$

From these we derive

$$\left.\begin{aligned}\log.\ R_x &= \log.\left(\frac{P}{V_o^3}\right) - \frac{3}{\sqrt{13}}\sqrt{13}\times\log.\frac{V}{V_o}\\ \log.\ R_y &= \log.\left(\frac{Q}{V_o^2}\right) - \frac{2}{\sqrt{13}}\sqrt{13}\times\log.\frac{V}{V_o}\end{aligned}\right\} \quad \ldots \quad (22)$$

On the axis log. V let us take a point V_o such that

$$OV_o = \sqrt{13}\times\log. V_o \quad \text{(Fig. 1)}.$$

The vector V_oV then represents

$$\sqrt{13}\times\log.\frac{V}{V}.$$

Let us then carry this vector over to C_oB on the vector AB, and then project C_o to A_o on the axis log. R_x. Finally, lead the vector A_oB_o to the ordinate parallel to the axis log. R_y. To the contour $OABM_i$, in which

$$OA = \log. P,\ AB = \sqrt{13}\times\log. V,\ BM_i = \log. Q,$$

we thus substitute the contour $OA_oB_oM_i$, which is its equivalent, since it has the same resultant, and which is such that

$$OA_o = \log.\left(\frac{P}{V_o^3}\right),\ A_oB_o = \sqrt{13}\times\log.\frac{V}{V_o},\ B_oM_i = \log.\left(\frac{Q}{V_o^2}\right)$$

We have as a result:

$$\text{Vector } OA_o = \text{vector } OA + \text{vector } AA_o$$
$$\text{Vector } AA_o = -3\log. V_o$$
$$\text{Vector } OA_o = \log. P - 3\log. V_o = \log.\left(\frac{P}{V_o^3}\right)$$

As we shall have constantly to consider a vector V_oV or A_oB_o or $\sqrt{13}\times\log.\frac{V}{V_o}$, it is natural to carry the point V_o to the origin.

When the velocity of the aeroplane is equal to V_o, the vector A_oB_o disappears; the points A_o and B_o become coincident with the point M_x (Fig. 2). It is, in fact, easy to see that we have

$$M_xA_o = 3\log.\frac{V}{V_o},\ B_oM_x = 2\log.\frac{V}{V_o}$$

The coordinates log. R_x and log. R_y of the point have then for values

$$\left.\begin{aligned} \log.\ R_x &= \log.\left(\frac{P_o}{V_o^3}\right) \\ \log.\ R_y &= \log.\left(\frac{Q_o}{V_o^2}\right) \end{aligned}\right\} \quad \ldots\ldots\ldots \quad (23)$$

From these equations we derive

$$\left.\begin{aligned} R_x &= \frac{P_o}{V_o^3} \\ R_y &= \frac{Q_o}{V_o^2} \end{aligned}\right\} \quad \ldots\ldots\ldots \quad (24)$$

We are therefore able to develop a correspondence between a point M_x on the axis of abscissae (Fig. 2) and a value R_x, such that

$$OM_x = \log.\ R_x,$$

and a value P_o of the useful power such that

$$OM_x = \log.\left(\frac{P_o}{V_o^3}\right)$$

In other words, the axis of abscissae may be graduated in terms of useful power.

In the same way we may graduate the axis of ordinates in terms of weight.

Let us now suppose that, in a problem, we have given the useful power P and the speed V. The axis of abscissae, which is the scale for P, gives immediately the point A_o, such that

$$V_oA_o = \log.\left(\frac{P}{V_o^3}\right) \quad \text{(See Fig. 2).}$$

The vector V_oV is such that

$$V_oV = \sqrt{13} \times \log.\ \frac{V}{V_o}.$$

The contour $V_oA_oB_o$ may be traced. By carrying B_oM_4 parallel to log. R_y and extending to the point of intersection with the polar curve, there is found the vector

$$B_oM_4 = \log.\left(\frac{Q}{V_o}\right).$$

If this vector is led down from V_o on the scale of R_y, which is at the same time the scale of weight, the extremity of the segment gives immediately the weight Q which is sought.

In the system of units (meter, kilogram, second) generally used, P is expressed in kilometer-seconds, V in meter-seconds,

Q in kilograms (weight). It is more convenient, for practical application, to graduate the scales for P and V in hp. and in kilometers per hour. To this end it is sufficient to divide the indications of the first scale by 75 for hp. and to multiply by 3.6 the numbers relating to velocity.

If the velocity W is less than V_o, the segment is directed opposite to the segment V_oV. The contour to consider is $V_o A_o' B_o' M_4$ (See Fig. 2). We have, in fact, in this case

$$\left.\begin{aligned} \log. R_x &= \log.\left(\frac{P}{V_o^3}\right) + 3 \log. \frac{V_o}{W} \\ \log. R_y &= \log.\left(\frac{Q}{V_o^2}\right) + 2 \log. \frac{V_o}{W} \end{aligned}\right\}$$

It is easily seen that these equations represent the projections on the two axes, of the contour $V_o A_o' B_o' M_4$.

We are thus led to the following rule:

If we follow a broken line starting from the origin and ending on the polar curve, the direction in which each vector is traversed is the direction in which such vector should be placed, starting from the origin, on the corresponding scale in order to give its value.

It results immediately that if we have the contour V_oABCD (Fig. 2), the vector BC corresponds to a speed greater than the vector BD, these two speeds being, furthermore, inferior to V_o.

Let us suppose, now, that the results found with the model do not correspond to the conditions which had been fixed *a priori* for the aeroplane. The question may then arise of changing proportionately the dimensions of the apparatus.

Let N be the ratio of the lineal dimensions of the second apparatus to those of the first; N, for example, might be 1.10 for an increase of 10% in the dimensions.

The fundamental equations of horizontal flight for this new apparatus will be

$$\left.\begin{aligned} \frac{P}{V_o^3} &= R_x N^2 \left(\frac{V}{V_o}\right)^3 \\ \frac{Q}{V_o^2} &= R_y N^2 \left(\frac{V}{V_o}\right)^2 \end{aligned}\right\} \quad \ldots\ldots\ldots \quad (25)$$

It is not necessary to construct special polar curves corresponding to various values of N in order to determine the value suited to this number. We find, in fact, from equations (25)

$$\left.\begin{aligned} \log. R_x &= \log.\left(\frac{P}{V_0^3}\right) - 3 \log. \frac{V}{V_0} - 2 \log. N \\ \log. R_y &= \log.\left(\frac{Q}{V_0^2}\right) - 2 \log. \frac{V}{V_0} - 2 \log. N \end{aligned}\right\} \quad . \quad . \quad . \quad (26)$$

To the vectors,

$$\log.\left(\frac{P}{V_0^3}\right),\ \log.\left(\frac{Q}{V_0^2}\right),\ \sqrt{13} \times \log. \frac{V}{V_0},$$

it is convenient to add a fourth vector,

$$\sqrt{8} \times \log. N,$$

This is directed along the line making the angle $5\frac{\pi}{4}$ with the axis of abscissae (Axis V_0 N, Fig. 2).

If N is greater than unity, the values of log. N are laid off along this axis; if N is less than unity, they are laid off along the line $\frac{\pi}{4}$ with the axis of abscissae.

If then the values fixed in advance are P, Q, V, it is sufficient, in order to have the value of N which will permit of realizing these values, to draw the fourth segment in a suitable direction until it meets the polar curve. The fourth segment indicates, furthermore, by its intersection with the polar curve, a suitable angle of flight.

Instead of terminating the polygonal contour running from the origin to a point of the curve by the vector $\sqrt{8} \times$ log. N, we may trace this segment first. In other words, instead of starting from the origin of coordinates as the origin of contour, we may start from a point situated on the axis of N. We then see immediately by the figure what becomes of the properties of an aeroplane for which the dimensions have been multiplied by the number determined by the point on the axis of N which was taken for the point of departure. Every broken line drawn between this point and the polar curve gives the system of values P, Q, V, which corresponds to the modified apparatus.

We cannot here indicate the solution of all the problems for which the consideration of the logarithmic polar provides. To this end, reference should be made to the work of M. Eiffel noted in the bibliography attached to this paper. However, we may note, in résumé, the results to which this study of the logarithmic polar leads.

For all the forms of apparatus studied by M. Eiffel, the logarithmic polar curves always present the same general char-

acteristic, that of Fig. 3. Beginning with small values of the angles of incidence, we find the angles of horizontal flight for which the properties are the following:

(1) Angle i_1 for which R_x is minimum (Fig. 3).

This angle is given by the point of contact of the tangent to the polar, parallel to the axis of ordinates.

Horizontal flight under this angle corresponds to the maximum speed for a given power, or to the minimum power for a given speed.

(2) Angle i_2 for which $\frac{R_x}{R_y}$ is a minimum (Fig. 3).

This angle is given by the point of contact of the tangent to the polar curve, drawn parallel to the axis of N.

Horizontal flight under this angle corresponds to the minimum tractive force required for a given weight, or to the maximum weight for a given tractive force.

(3) Angle i_3 for which $\frac{R_x^2}{R_y^3}$ is a minimum (Fig. 3).

This angle is given by the point of contact of the tangent to the polar curve, drawn parallel to the axis V_oV.

Horizontal flight under this angle corresponds to the minimum power for a given weight, or to the maximum weight for a given power.

(4) Angle i_4 for which R_y is maximum (Fig. 3).

This angle is given by the point of contact of the tangent to the polar curve, drawn parallel to the axis of abscissae.

Horizontal flight under this angle corresponds to the maximum weight for a given speed, or to the minimum speed for a given weight.

It is seen that to each one of the angles of incidence, i_1, i_2, i_3, i_4, we may relate two magnitudes, of which one is maximum or minimum when the other is given. Each one of these angles is the most favorable angle regarding the two corresponding magnitudes.

As these polar curves, in their useful part, do not have a point of inflection, it follows that the nearer the angle of horizontal flight lies to one of the angles i_1, i_2, i_3, i_4, the better are the conditions with regard to the group of magnitudes which correspond to these angles.

Let us take an example.

The weight carried by an aeroplane is judged to be too small. It is desired to gain weight at the expense of speed, but at the same time preserving the same expenditure of power. It is sufficient to approach the point for which the weight will be maximum for a given power. It is well to give to the apparatus a construction such that horizontal flight (with the axis of the propeller in the direction of the path) is made under an angle as near as possible to the values indicated for i_3.

We have constructed the logarithmic polar curve for a given position of the depth rudder. We have, by means of this curve, studied the properties of horizontal flight for an apparatus under different angles of flight. We have then supposed that, for all these angles, the air resistance passed sensibly through the point of intersection of the axis of the propeller and of the vertical through the center of gravity. For each apparatus, this is sensibly true for an average position for the depth rudder.

But we may approach still more closely to reality. Experiments made on a model with various positions of the depth rudder give the resultants of the air resistance which pass exactly through the point Γ of intersection of the axis of the propeller and of the vertical through the center of gravity. We then have sufficient data for the following tables:

Position of Rudder	Characteristics of the resistance of the air, passing through Γ.
A	R_xA, R_yA, i_A
B	R_xB, R_yB, i_B
C	R_xC, R_yC, i_C

With these data we may construct the curves

$R_y = f_1(R_x)$ Ordinary polar curve.

$R_y = f_2(i)$

$\log. R_y = f_3(\log. R_x)$ Logarithmic polar curve.

A point of one of these curves gives, not only the values of R_x, R_y, i, but indicates at the same time the corresponding position of the depth rudder.

4. The Characteristic Coefficients of Propellers According to G. Eiffel.

The experimental study of the propeller includes the following quantities:

(1) The thrust, Π.

(2) The effective power, P_e, delivered to the propeller shaft.

(3) The number n of revolutions per minute of time.

(4) The velocity of flight, V.

These experimental data permit the determination of the following.

(a) The useful power expended in propulsion

$$P_u = \Pi \times V \quad \ldots\ldots\ldots\ldots \quad (27)$$

(b) The angular velocity, $2\pi n$. The speed of rotation of the extremity of the blade of the propeller πnD (D equals the diameter of the propeller)

(c) The moment of the couple of rotation

$$C = \frac{P_e}{2\pi n} \quad \ldots\ldots\ldots\ldots \quad (28)$$

(d) The efficiency of the propeller

$$\rho = \frac{P_u}{P_e} = \frac{\Pi}{C} \times \frac{V}{2\pi n} \quad \ldots\ldots\ldots \quad (29)$$

What are then the coefficients which should be considered in the study of a propeller?

(1) The direction of the relative velocity at the extremity of a blade; it is characterized by the ratio

$$\frac{V}{\pi n D}$$

(2) Magnitudes of the nature of a density,

$$\frac{\Pi}{n^2 D^4}, \frac{C}{n^2 D^5}, \frac{P_e}{n^3 D^5}, \frac{P_u}{n^3 D^5} \quad \ldots\ldots\ldots \quad (G_1)$$

(3) The abstract number ρ.

Let us assume, as a first approximation, that the magnitudes here mentioned are functions of a single ratio $\frac{V}{nD}$.

It is naturally the same with the magnitudes

$$\frac{\Pi}{n^2 D^4}\left(\frac{V}{nD}\right)^m; \frac{C}{n^2 D^5}\left(\frac{V}{nD}\right)^p; \frac{P_e}{n^3 D^5}\left(\frac{V}{nD}\right)^q; \frac{P_u}{n^3 D^5}\left(\frac{V}{nD}\right)^{q'};$$

whatever may be the exponents m, p, q, q'.

In the group (G_1) the velocity V does not enter. We may then dispose the preceding exponents in such manner as to define two other groups of coefficients which do not contain D or n.

By taking $m = -4$, $p = q = q' = -5$, we have the group (G_2)

$$\frac{\Pi n^2}{V^4}, \frac{C n^3}{V^5}, \frac{P_e n^2}{V^5}, \frac{P_u n^2}{V^5} \quad \ldots\ldots\ldots \quad (G_2)$$

By taking $m = p = -2$, $q = q' = -3$, we derive the coefficients

$$\frac{\Pi}{D^2 V^2}, \quad \frac{C}{D^3 V^2}, \quad \frac{P_e}{D^2 V^3}, \quad \frac{P_u}{D^2 V^3}, \quad \ldots\ldots \quad (G_3)$$

With the efficiency ρ, the preceding groups define 13 coefficients which may serve to characterize a problem.

Among these coefficients it is sufficient to note more especially the following:

$$\frac{P_e n^2}{V^5}, \quad \frac{P_e}{D^2 V^3}, \rho \quad \ldots\ldots\ldots \quad (G_4)$$

Two problems, in fact, often arise, as under (1) and (2) following.

(1) Suppose an aeroplane for which we must choose a propeller directly connected with the motor.

We have given, the speed of translation, V, of the aeroplane, the power, P_e, and the number of revolutions, n, of the motor. These data enable us to calculate the coefficient $\frac{P_e n^2}{V^5}$.

What is the diameter which should be given the propeller?

What is the efficiency of this propeller under the preceding conditions of operation?

Let us take a given type of propeller. Suppose a study of a model of this propeller has permitted us to construct curves giving as a function of $\frac{V}{nD}$ the various values of $\frac{P_e n^2}{V^5}$ and of ρ.

It is then easy to take from one of these curves the value of $\frac{V}{nD}$ which corresponds to the particular value of $\frac{P_e n^2}{V^5}$ suited to the propeller. This value of $\frac{V}{nD}$ gives immediately the diameter of the propeller as desired.

At the same time, on the other curve corresponding to the value of $\frac{V}{nD}$ thus determined, we may read the value of the efficiency ρ.

(2) Suppose an aeroplane with chain-connected propeller or a dirigible.

We have given the power, P_e, of the motor, the speed of translation, V, the diameter of the propeller, D, and, in consequence, the coefficient $\frac{P_e}{D^2 V^3}$.

It is required to determine the number of revolutions of the propeller and its efficiency.

Let us suppose that for a given type of propeller we have,

by means of model experiments, constructed curves giving as a function of $\frac{V}{nD}$, values of $\frac{P_e}{D^2 V^3}$ and of the efficiency ρ.

On the first curve the particular value calculated for $\frac{P_e}{D^2 V^3}$ gives the corresponding value of $\frac{V}{nD}$, and, in consequence, the number of revolutions, n, of the propeller. To this value of $\frac{V}{nD}$ there corresponds a value of the efficiency ρ which is read on the second curve of efficiencies.

What has been said shows that the construction of two curves relating to two coefficients of the groups (G_1), (G_2), (G_3) (the efficiency, ρ, being joined to each one of these groups), suffices for the determination for the operation of a propeller under determinate conditions. We may represent as a function of $\frac{V}{nD}$ the following:

$$\frac{\Pi}{n^2 D^4} \text{ and } \frac{C}{n^2 D^5} \text{ of the group } (G_1)$$

$$\frac{\Pi n^2}{V^4} \text{ and } \frac{C n^2}{V^5} \text{ of the group } (G_2)$$

$$\frac{P_e}{n^3 D^5} \text{ and } \frac{P_u}{n^3 D^5} \text{ of the group } (G_3)$$

etc.

We may indeed construct but a single curve, that which corresponds to the power P_e, for example, on the condition of noting on such curve the various values of the efficiency.

We have assumed, as a first approximation, that any coefficient Γ of one of the preceding groups is represented by a single curve in the plane $\left(\Gamma, \frac{V}{nD}\right)$.

In reality, to each value of $\frac{V}{nD}$ there correspond in the plane $\left(\Gamma, \frac{V}{nD}\right)$ various values of Γ. These latter correspond to varying values of nD or of $\pi n\dot{D}$ (velocity of rotation at the extremity of the blade). Instead of having for Γ a single representative curve in the plane $\left(\Gamma, \frac{V}{nD}\right)$, there are several curves, of which each one corresponds to a particular value of nD.

However, for values of nD varying by 10 units (D expressed in meters, n in revolutions per second) in the field of values of nD comprised between 25 and 50 (values actually met with in

practice), the curves corresponding to the various values of nD differ but little from an average curve, which is the one here considered.

5. Study of the Properties of Propellers. The Logarithmic Diagram of M. Eiffel.

We have now to consider the representation as a function of $\frac{V}{nD}$ of the coefficients $\frac{P_e}{n^3 D^5}$ and $\frac{P_u}{n^3 D^5}$.

We develop this representation by taking for abscissae values of $\log. \frac{V}{nD}$ and for ordinates values for $\log. \frac{P_e}{n^3 D^5}$ and $\log. \frac{P_u}{n^3 D^5}$ (Fig. 4).

We thus obtain what M. Eiffel calls the logarithmic diagram for propellers.

When these diagrams are constructed we may read directly, by means of a single scale and from axes suitably chosen, the values of the 13 coefficients, ρ and the groups (G_1), (G_2), (G_3).

These same diagrams give us also directly the various values of the magnitudes

$$V,\ n,\ D,\ \Pi,\ C,\ P_e,\ P_u,\ \rho.$$

Let us now show how, by means of these diagrams, the values of the 13 characteristic coefficients of a propeller may be read. We have the following relations:

$$\left.\begin{aligned}
&\log. \frac{\Pi}{n^2 D^4} = \log. \left[\frac{\Pi V}{n^3 D^5} \times \frac{nD}{V}\right] = \log. \frac{P_u}{n^3 D^5} - \log. \frac{V}{nD} \\
&\log. \frac{C}{n^2 D^5} = \log. \left[\frac{2\pi n C}{n^3 D^5} \times \frac{1}{2\pi}\right] = \log. \frac{P_e}{n^3 D^5} - \log. 2\pi \\
&\log. \rho = \log. \frac{P_u}{P_e} = \log. \frac{P_u}{n^3 D^5} - \log. \frac{P_e}{n^3 D^5}.
\end{aligned}\right\} \text{. . Group } (G_1)$$

$$\left.\begin{aligned}
&\log. \frac{\Pi n^2}{V^4} = \log. \left[\frac{\Pi V}{n^3 D^5} \times \frac{n^5 D^5}{V^5}\right] = \log. \frac{P_u}{n^3 D^5} - 5 \log. \frac{V}{nD} \\
&\log. \frac{C n^3}{V^5} = \log. \left[\frac{2\pi n C}{n^3 D^5} \times \frac{n^5 D^5}{V^5} \times \frac{1}{2\pi}\right] = \log. \frac{P_e}{n^3 D^5} \\
&\qquad\qquad - 5 \log. \frac{V}{nD} - \log. 2\pi \\
&\log. \frac{P_e n^2}{V^5} = \log. \left[\frac{P_e}{n^3 D^5} \times \frac{n^5 D^5}{V^5}\right] = \log. \frac{P_e}{n^3 D^5} - 5 \log. \frac{V}{nD} \\
&\log. \frac{P_u n^2}{V^5} = \log. \left[\frac{P_u}{n^3 D^5} \times \frac{n^5 D^5}{V^5}\right] = \log. \frac{P_u}{n^3 D^5} - 5 \log. \frac{V}{nD}
\end{aligned}\right\} \text{. . Group } (G_2)$$

$$\left.\begin{aligned}
&\log.\frac{\Pi}{D^2V^2}=\log.\left[\frac{\Pi V}{n^3D^5}\times\frac{n^3D^3}{V^3}\right]=\log.\frac{P_u}{n^3D^5}-3\log.\frac{V}{nD}\\
&\log.\frac{C}{D^3V^2}=\log.\left[\frac{2\pi nC}{n^3D^5}\times\frac{n^2D^2}{V^2}\times\frac{1}{2\pi}\right]=\log.\frac{P_e}{n^3D^5}\\
&\qquad\qquad -2\log.\frac{V}{nD}-\log.2\pi\\
&\log.\frac{P_e}{D^2V^3}=\log.\left[\frac{P_e}{n^3D^5}\times\frac{n^3D^3}{V^3}\right]=\log.\frac{P_e}{n^3D^5}-3\log.\frac{V}{nD}\\
&\log.\frac{P_u}{D^2V^3}=\log.\left[\frac{P_u}{n^3D^5}\times\frac{n^3D^3}{V^3}\right]=\log.\frac{P_u}{n^3D^5}-3\log.\frac{V}{nD}
\end{aligned}\right\}\ \text{. . Group (G3)}$$

On the axis of abscissae $\left(\log.\frac{V}{nD}\right)$ let us take the point which corresponds to $\frac{V}{nD}=1$. According to the mode of graduation of the scale of abscissae, the vector having for origin this point and for extremity a point on the axis of abscissae, is, in absolute value, equal to $1-\log.\alpha$, $\frac{\alpha}{10}$ (α being a whole number); this is the value of $\frac{V}{nD}$ which corresponds to a point at the extremity of the vector. The values of α inferior to 10 correspond to the points on the axis of abscissae situated to the left of the point $\left(\frac{V}{nD}=1\right)$; the values of α superior to 10 correspond to the points on the axis of abscissae situated on the right of the point $\left(\frac{V}{nD}=1\right)$. The vectors issuing from the point $\left(\frac{V}{nD}=1\right)$ measure then, with their sign, the values of $\log.\frac{V}{nD}$.

This being understood, let us draw through the point $\left(\frac{V}{nD}=1\right)$ right lines having for angular coefficients, 1, 3, 5. Let us take these lines as origins for vectors parallel to the axis of ordinates and terminating, either on the polar curve, $\log.\frac{P_e}{n^3D^5}$ or $\log.\frac{P_u}{n^3D^5}$. The vectors thus defined measure

$\log.\frac{\Pi}{n^2D^4}$, (Right line for angular coefficient equal to 1);

$\log.\frac{\Pi}{D^2V^2}$, $\log.\frac{P_e}{D^2V^3}$, $\log.\frac{P_u}{D^2V^3}$, (Right line for angular coefficient equal to 3);

$\log.\frac{\Pi n^2}{V^4}$, $\log.\frac{P_e n^2}{V^5}$, $\log.\frac{P_u n^2}{V^5}$, (Right line for angular coefficient equal to 5).

In tracing the right line ordinate ($\log. 2\pi$) and taking this line as the origin of vectors parallel to the axis of ordinates, and

terminating at one or the other of the logarithmic polars, these vectors represent

$$\log.\frac{C}{n^2 D^5},\ \log.\frac{C n^3}{V^5},\ \log.\frac{C}{D^3 V^2}.$$

For these two last, it is necessary, furthermore, to trace through the point $\left(\frac{V}{nD}=1,\ \text{ord.}=\log.\ 2\,\Pi\right)$ the right line for angular coefficient 5 and the right line for angular coefficient 2.

Finally the vector log. ρ is represented by the difference of the ordinates $\frac{P_u}{n^3 D^5}$ and log. $\frac{P_e}{n^3 D^5}$ of the two logarithmic polars corresponding to the same value of $\frac{V}{nD}$.

In practice it is important to know as a function of V, n, D, the following:

(1) The useful power, P_u (from the viewpoint of the operation of the aeroplane)

(2) The effective power, P_e (from the viewpoint of the motor to install on the aeroplane)

(3) The efficiency ρ.

Let us consider the logarithmic polar

$$\left[\log.\frac{P_e}{n^3 D^5},\ \log.\frac{V}{nD}\right].$$

We have

$$\left.\begin{aligned}\log.\frac{V}{nD} &= \log. V-\frac{1}{\sqrt{10}}\times\sqrt{10}\log. n-\frac{1}{\sqrt{26}}\sqrt{26}\log. D\\ \log.\frac{P_e}{n^3 D^5} &= \log. P_e-\frac{3}{\sqrt{10}}\sqrt{10}\log. n-\frac{5}{\sqrt{26}}\sqrt{26}\log. D\end{aligned}\right\}\quad(30)$$

Let us trace the directions ON and OD (Fig. 4) making with the positive direction of the axis of abscissae, the first the angle $(\pi+\alpha_1)$, and the second the angle $(\pi+\alpha_2)$, the angles α_1 and α_2 being given by the relations:

$$\text{tang. }\alpha_1=3,\ \text{tang. }\alpha_2=5\quad\ldots\ldots\ldots\quad(31)$$

The two equations (30) express that, for the contour OAB $\left[OA=\log.\frac{V}{nD},\ AB=\log.\frac{P_e}{n^3 D^5}\right]$ we may substitute the contour $OA_1B_1C_1B$, which has the same resultant. This new contour is such that:

OA_1 is parallel to the axis of $\frac{V}{nD}$ and has for magnitude log. V; A_1B_1 is parallel to OD and has for magnitude $\sqrt{26} \times$ log. D; B_1C_1 is parallel to ON and has for magnitude $\sqrt{10} \times$ log. n; C_1B is parallel to the axis of $\frac{P_e}{n^3 D^5}$ and has for magnitude log. P_e.

If the proper graduations have been made on the various axes parallel to the sides of this contour (graduation in log. V on the axis of $\frac{V}{nD}$; graduation in log. P_e on the axis of $\frac{P_e}{n^3 D^5}$; graduation in $\sqrt{10}$ log. n on the axis of n; graduation in $\sqrt{26}$ log. D on the axis of D), it is easy, by the construction of the contour in question, to determine any one of the vectors, knowing the magnitudes of the others. It is sufficient to remark that the contour, starting from the point O, must always end on a point of the logarithmic polar.

But this construction may be transformed in the following manner.

In present practice with aeroplanes, normal conditions of operation lead to the employment of propellers of a diameter of about 3 meters (9.84 ft.) turning at about 800 r.p.m. If, for these conditions near the normal, the vectors A_1B_1 and B_1C_1 are zero, the contour $OA_1B_1C_1B$ is reduced to the contour OAB. The construction relative to normal operation is very much simplified, since it is reduced to the tracing of two lines instead of four. Now the vectors A_1B_1 and B_1C_1 are zero, if the normal values (800 r.p.m., 3 m.) coincide with the origin O. We are therefore led, for n and D, to a change of origin, which may be made in the following manner.

Let us consider a particular number of revolutions n_o and a diameter D_o for the propeller. We have then:

$$\left.\begin{aligned} \frac{V}{nD} &= \frac{V}{n_o D_o} \times \frac{n_o}{n} \times \frac{D_o}{D} \\ \frac{P_e}{n^3 D^5} &= \frac{P_e}{n_o^3 D_o^5} \times \left(\frac{n_o}{n}\right)^3 \times \left(\frac{D_o}{D}\right)^5 \end{aligned}\right\} \quad \ldots\ldots \quad (32)$$

$$\left.\begin{aligned} \text{log. } \frac{V}{nD} &= \text{log. } \frac{V}{n_o D_o} - \frac{1}{\sqrt{10}} \sqrt{10} \text{ log. } \frac{n}{n_o} - \frac{1}{\sqrt{26}} \sqrt{26} \text{ log. } \frac{D}{D_o} \\ \text{log. } \frac{P_e}{n^3 D^5} &= \text{log. } \frac{P_e}{n_o^3 D_o^5} - \frac{3}{\sqrt{10}} \sqrt{10} \text{ log. } \frac{n}{n_o} - \frac{5}{\sqrt{26}} \sqrt{26} \text{ log. } \frac{D}{D_o} \end{aligned}\right\} . \quad (33)$$

These equations mean that for the contour OAB, and, in consequence, for the contour $OA_1B_1C_1B$, we have substituted the equivalent contour $OA_1'\ B_1'\ C_1'\ B$ (Fig. 4), in which:

$$OA_1' = \log.\frac{V}{n_o D_o}\left(\text{directed along the axis of } \log.\frac{V}{n D}\right)$$

$$A_1'B_1' = \sqrt{26}\log.\frac{D}{D_o}\ (\text{directed along } OD)$$

$$B_1'C_1' = \sqrt{10}\log.\frac{n}{n_o}\ (\text{directed along } On)$$

$$C_1' B = \log.\frac{P_e}{n_o^3 D_o^5}\left(\text{directed along the axis of } \log.\frac{P_e}{n^3 D^5}\right)$$

For $n = n_o$ and $D = D_o$ the vectors $A_1'B_1'$ and $B_1'C_1'$ are zero. The points $n = n_o$, $D = D_o$ are the origins of the vectors $\sqrt{10}\log.\frac{n}{n_o}$, $\sqrt{26}\log.\frac{D}{D_o}$.

The angles α_1 and α_2 defined by the relations (31) are too large and lead to ill-proportioned diagrams. We shall substitute for them the angles α_1' and α_2' such that:

$$\text{tang. } \alpha_1' = \frac{3}{2},\ \text{tang. } \alpha_2' = \frac{5}{2} \quad . \quad . \quad . \quad . \quad . \quad . \quad . \quad (34)$$

The angular coefficients of the axes On and OD are one half less than the preceding, defined by the relations (31).

To this end it is sufficient to plot the ordinates on a scale one half that of the abscissae. The ordinate of a point on the axis of n, instead of being equal to 3 times the abscissa of this point is only 3/2 times.

In the place of equations (33) we shall substitute the following:

$$\left.\begin{aligned}\log.\frac{V}{nD} &= \log.\frac{V}{n_o D_o} - \frac{2}{\sqrt{13}}\cdot\frac{\sqrt{13}}{2}\log.\frac{n}{n_o} - \frac{2}{\sqrt{29}}\cdot\frac{\sqrt{29}}{2}\log.\frac{D}{D_o}\\ \log.\frac{P_e}{n^3 D^5} &= \log.\frac{P_e}{n_o^3 D_o^5} - \frac{3}{\sqrt{13}}\cdot\frac{\sqrt{13}}{2}\log.\frac{n}{n_o} - \frac{3}{\sqrt{29}}\cdot\frac{\sqrt{29}}{2}\log.\frac{D}{D_o}\end{aligned}\right\} \quad (35)$$

Log. $\frac{V}{nD}$ and log. $\frac{V}{n_o D_o}$ are represented according to the same scale as before, OA_1' for example, in the two cases. Log. $\frac{P_e}{n^3 D^5}$ and log. $\frac{P_e}{n_o^3 D_o^5}$ are represented according to a scale one half less (for example, $C_1''\ B' = \frac{C_1' B}{2}$). As to the axes of n and of D, they have angular coefficients which are one half of the preceding. They have the directions designated by On' and OD' in

Fig. 4. The vectors which are laid out along these axes have for magnitude:

$$\frac{\sqrt{13}}{2} \log. \frac{n}{n_o} \text{ and } \frac{\sqrt{29}}{2} \log. \frac{D}{D_o}$$

The new contour is $OA_1' B_1'' C_1'' B'$, which is equivalent to the contour OAB', the point B' being a point of the logarithmic polar, of which the ordinates are laid off to a scale one half that of the abscissae.

In practice, we have given directly the speed V and the power P_e. It is then necessary to inscribe on the various points on the axis of $\frac{V}{nD}$ and of $\frac{P_e}{n^3 D^5}$ the corresponding values of V and of P_e.

Let us take an example. Suppose that, on the axis of $\frac{V}{nD}$ $\left(\log. \frac{V}{nD}\right)$, we have marked at a given point $\frac{V}{nD} = 0.7$. The vector comprised between the origin and this point represents log. (0.7). In a proposed problem, a certain velocity of translation is given, such that, in laying out, on the axis of $\frac{V}{nD}$, a suitable vector, we should find the point 0.7. If this is so, the speed V should have the value derived from the equation

$$\frac{V}{n_o D_o} = 0.7$$

In which

$n_o = 800$ r.p.m. $= 13.33$ r.p.s.
$D_o = 3$ meters.

From this we find

$V = 0.7 \times 3 \times 13.33 = 28$ meters per sec. $= 100.8$ kilometers per hour.

On the axis of $\frac{V}{nD}$, adjacent to the division 0.7 we write the number 100.8. If then at any time we have a speed of 100.8 km. per hour, we know that the vector log. $\frac{V}{n_o D_o}$ which must be laid off on the axis of abscissae, will be such that its origin is at the point O, while its extremity is at the point marked 0.7 or 100.8.

Following the same principle, the axis of ordinates is graduated in horsepower. Let it be desired to find the point on this

axis to which corresponds a power $P_e = 100$ horsepower. In the construction of the broken line we have to trace the vector $\frac{P_e}{n_0^3 D_0^5}$, in which $P_e = 100 \times 75 = 7500$ kilogram-meters.

$$n_0 = 13.33 \text{ r.p.s}; \; D_0 = 3$$

We have then

$$\frac{7{,}500}{13.33^3 \times 3^5} = 0.013$$

Adjacent to the point already marked 0.013 on the axis of ordinates, we write the number 100.

6. Study of the Properties of Screw Propellers. The Diagram of the Aerotechnic Institute of Saint-Cyr.

At the Aerotechnic Institute of Saint-Cyr, for each propeller, there are first made certain observations with the propeller held at a fixed point (not propelling the car) and the following curve is then constructed:

Abscissae N = r.p.m.
Ordinates Π_0 = tractive pull in kgms.
$P_e^{(0)}$ = horsepower on shaft.

Following this, with the propeller used to propel the car, similar measures are taken.

For a speed = V and r.p.m. = N or r.p.s. = n, let the traction or thrust = Π and power on the shaft = P_e. We then compute, for the same rotative speed of the propeller, the ratios

$$\frac{\Pi}{\Pi_0}, \quad \frac{P_e}{P_e^{(0)}}, \quad \rho = \frac{\Pi V}{75 P_e}$$

It is assumed, as a sufficient first approximation in practice, that these ratios are simple functions of $\frac{V}{nD}$. Curves are next plotted, for which the values of $\frac{V}{nD}$ are abscissae and the values of the preceding ordinates.

Let us consider, for a given type of propeller, the ratios:

$$\alpha_0 = \frac{\Pi_0}{n^2 D^4}. \qquad \beta_0 = \frac{P_e^{(0)}}{n^3 D^5}$$

According to Colonel Ch. Renard, who was the first to propose the use of these expressions in the study of the screw propeller at a fixed point, these ratios, for each type of propeller, are constant; they are the same for all similar propellers deduced from the type. If this is so, the ratios $\frac{\Pi}{\Pi_0}$, $\frac{P_e}{P_e^{(0)}}$ are proportional to the magnitudes $\frac{\Pi}{n^2 D^4}$, $\frac{P_e}{n^3 D^5}$, considered by M. Eiffel.

But if the coefficients a_o, β_o of Colonel Renard, $\frac{\Pi}{n^2 D^4}$, $\frac{P_e}{n^3 D^5}$ of M. Eiffel, vary with n, it may be assumed that this variation will remain nearly the same at all speeds of translation. The curve which represents $\frac{\Pi}{\Pi_o}$ as a function of $\frac{V}{nD}$ may be the same, whatever the value of n, so long as the curve representing $\frac{\Pi}{n^2 D^4}$ as a function of $\frac{V}{nD}$ varies with n. This is the reason for the mode of representation adopted at the Aerotechnic Institute of Saint-Cyr.

CHAPTER IV.

THE RESULTS OF EXPERIMENT.

1. Within what limits may the results of experiments made on models be applied to full-sized machines?

We have seen, Chapter II, that experimenters have studied the problem of the resistance of the air either on reduced size models, or on models nearly full size or on actual full-size models. The most complete and important results are those obtained by M. Eiffel on models.

One question presents itself immediately: Are all these experimental results comparable among themselves? To what extent, for actual aeroplanes, may we use the results of experiments carried out on a reduced scale?

Consider a body surrounded by the air and having a velocity of translation V relative to it. If S is a suitably chosen surface, distinctive or characteristic of the form or design, the resistance of the air may be expressed by the equation:

$$R = KSV^2 \quad . \quad . \quad . \quad . \quad . \quad . \quad . \quad . \quad . \quad . \quad . \quad . \quad . \quad . \quad . \quad . \quad . \quad (1)$$

K being a coefficient of the nature of a density.

We may first note a law sufficiently exact in a great number of cases, and which was formulated in the 17th century by Huyghens, Mariotte and Pardies as follows:

If the density of the air remains the same (experiments carried out in air at sensibly the same temperature and pressure), the coefficient K depends solely on the form of the body studied.

For similar bodies, the coefficient K is constant, whatever may be the value of the velocity V. The realization of an experiment on a reduced scale similar to an experiment full size is easy.

We may choose at will the scale of the model and the velocity for the experiment.

We have assumed that the body is given a movement of translation relative to the air: such a restriction is not essential. The movement of the body in the air may be more complex, accompanied, for example, by rotation: such is the case of a screw propeller. In any such case, however, the peripheral velocities for the model and for the full-sized machine should be in the same ratio as the velocities of translation or advance.

For sustaining propellers, the speeds of advance are zero, and this condition is fulfilled. If D is the diameter of the propeller and n the number of revolutions in unit time, if S is the area of the circle swept by the blades, we draw readily from (1) the laws announced in 1903 by Colonel Charles Renard; viz., for similar propellers we have:

$$\frac{\Pi_o}{n^2 D^4} = \text{constant}, \quad \frac{P_u^{(o)}}{n^3 D^5} = \text{constant}$$

where Π = traction or thrust of propeller and P_u = useful power expended.

It follows immediately, from what has been said above, that these formulae may be extended, with different coefficients, to propulsive propellers when the combination of speed of advance and of rotation gives, for homologous points, speeds equally inclined to the axis. In other words, provided the values of $\frac{V}{nD}$ are the same for two propellers geometrically similar, the results of experiments made on one of them are applicable to the other. We may apply to traction, screw propellers geometrically similar to equation (1) by considering that the coefficient K is a function of $\frac{V}{nD}$.

For the wings of an aeroplane and for aeroplanes complete, M. Eiffel assumes that K is a simple function of the form of the body under investigation. It is on this assumption that the formulae of paragraph 1 of Chapter III have been established.

M. Eiffel bases his conclusions in this regard on a comparison of results of tests made, on the one hand, by Commandant Dorand on a biplane in free flight, and, on the other hand, by himself by means of a fan on a model of this aeroplane built to a scale of 1/14.5.

Let us denote by $R_x V^2$ the drift (equal to the thrust of the propeller) measured on the aeroplane full size. Let us call μ_x the coefficient by which it is necessary to multiply the results of the experiments on the full-sized machine in order to pass to the model. The drift of the model at a scale of 1/14.5 will be, at the velocity V, equal to

$$\frac{1}{\mu_x} \times \frac{R_x V^2}{(14.5)^2}$$

This drift, brought to a speed of 10 meters (32.8 ft.) per sec., has for value,

$$r_x' = \frac{1}{\mu_x} \times \frac{R_x V^2}{(14.5)^2} \times \left(\frac{10}{V}\right)^2 \quad \ldots\ldots \quad (2)$$

Similarly, the thrust on the model, calculated from the thrust $R_y V^2$ measured on the aeroplane and brought to the speed of 10 meters per second, has for value,

$$r_y' = \frac{1}{\mu_y} \times \frac{R_y V^2}{(14.5)^2} \times \left(\frac{10}{V}\right)^2 \quad \ldots\ldots \quad (3)$$

These values r_x' and r_y' may be compared with the values r_x and r_y measured directly on the model placed before the fan.

From this the following values were found:

$$\mu_x = 0.99 \qquad r_x' = \frac{1}{0.99} r_x$$

$$\mu_y = 1.01 \qquad r_y' = \frac{1}{1.01} r_y$$

M. Eiffel believed that he was justified in concluding from these results that the law as stated above (law of similitude, supposing K constant) was verified within 1%. We do not consider the conclusion justified. The measurements of M. Eiffel and those of Com. Dorand were not made under the same conditions. In those of M. Eiffel the model of the propeller was fixed; in those of Com. Dorand the propeller revolved before sustaining planes. Now the wind from the propeller has on the wings a certain action; it therefore seems to result that the agreement within 1% between the results of M. Eiffel and those of Com. Dorand shows that if the experiments had been carried out under conditions really comparable, the results obtained would have shown a definite divergence.

Comparative experiments on surfaces and their models (ratio of 1/10) have, furthermore, been made at the same relative velocity at the laboratory of Saint-Cyr (method by car) and at

the Eiffel laboratory. For varying values of the angle of incidence i, the values of K_x and K_y were plotted for a certain number of surfaces. The following results were obtained:

(a) The curves for K_y have the same general form; those determined by the car are, in general, above those determined from the model; they are, moreover, readily distinguished from them.

(b) The curves for K_x likewise have the same general form; those determined by the car are sometimes above and sometimes below the others. On the whole, it is very difficult to draw any conclusions from these divergences. On the one hand the forces to be measured are very small; on the other, with the surfaces parallel to the current of air, the nature of the surfaces (duck for the aeroplane at Saint-Cyr and well polished wood for the model), with their roughness or slight deformations, may assume the highest importance.

(c) As regards the centers of thrust (intersection of the resultant of the air resistance with the chord of the profile of the surface in the plane of symmetry), the agreement is in general satisfactory. However, for certain surfaces, M. Eiffel finds this point a little farther from the attacking edge than the Institute of Saint-Cyr; for other surfaces, it is the inverse.

According to this result, it does not seem that M. Soreau is correct in assuming that the law of similitude is less exact in regard to the location of the resultant of the resistance than in regard to its magnitude. However, we shall find later certain other experimental results which seem to justify this conclusion.

(d) As to the distribution of the pressure (both above and below normal) over the two faces of the surfaces, the general agreement is quite satisfactory. The systematic divergence is marked by this fact that the values of the drop of the pressures below normal (negative pressure or suction) on the upper face are greater for the car than for the fan, which agrees with the comparison of the values of K_y. For certain angles, near the attacking edge, the experiments with the car indicated a relatively greater value of the drop below normal pressure.

In the comparison of the results obtained with the surfaces tested full size on the car and with models 1/10 tested by the fan (same relative velocity), there was found the same general

form of curve for the results, with the vertical force appearing systematically a little greater for the car than for the fan.

M. de Guiche deduces from his experiments on curved aerofoils the following conclusions:

Two aerofoils of the same spread, but with different profiles geometrically similar, are not comparable.

He has studied the two following forms:

(a) Thick aerofoil [maximum thickness 101 mm. (4 in.)] with circular curvature;

Chord = 120 cm. (47.3 in.);

Maximum height of mean line segment ÷ length of chord = 1/10 (Mean line segment = intersection of plane of symmetry with the surface equidistant between the two faces, upper and lower).

Maximum height of upper line segment ÷ length of chord = 1/7 (Upper line segment = intersection of plane of symmetry with the upper face of aerofoil).

Spread = 170 cm. (68 in.);

Radius of curvature of the upper face = 130 cm. (51 in.).

Radius of curvature of the lower face = 252 cm. (99.3 in.).

The two surfaces are joined by half circles of 14 mm. (56 in.) radius.

(b) Aerofoil of which the section is a proportional reduction of the preceding, in the ratio of ½.

Maximum thickness = 50 mm. (2 in.)

Spread = 170 cm. (68 in.)

Chord = 60 cm. (23.7 in.)

Radius of curvature of upper face = 65 cm. (25.5 in.)

Radius of curvature of lower face = 126 cm. (49.7 in.)

Radius of connecting circles = 7 mm. (0.28 in.)

These similar profiles are subject to reductions below the normal pressure very different at corresponding points. For the same angle of incidence there is no relation between the distribution of pressures above and below normal on the two faces. The variations of the thrust and of the center of the thrust are very different in the two cases. On form (a) the point of application of the resultant advances constantly toward the attacking edge as the angle of incidence increases up to 25° (limit of the experi-

ment). On form (b), on the contrary, the point of application of the resultant advances toward the attacking edge until the angle $i =$ about 12°, then for values of i greater than 12° it returns toward the center of the wing.

The curve of the values of K_x is sensibly the same for the two forms, but the curve of the values of K_y takes very different forms in the two cases. For form (a) the values of K_y increase constantly up to $i = 25°$. For form (b) K_y passes through a maximum for $i = 12°$. This appears to be the critical angle for this form; it marks at the same time the maximum of K_y and the most advanced position of the force.

We have insisted on these results of experiment which show clearly that, for wings and for aeroplanes, the law of similitude based on an assumed constant value of K is not exact.

Nevertheless, we believe that this law is sufficient for the guidance of constructors regarding the aerodynamic qualities of aerofoils, or of complete aeroplanes for which the design is in hand.

Regarding screw propellers, this law is not of itself sufficient. It is not enough that the experiments on a propeller full size and on its model should be made in such manner that $\frac{V}{nD}$ shall have the same value. It is necessary, further, that the speed of advance V and, in consequence, the peripheral speed $\pi\, nD$ shall be the same. Equation (1) is applicable for propellers moving forward through the air on condition of considering K as a function not only of $\frac{V}{nD}$ but of V.

It is thus necessary, in order to keep the revolutions of the propeller within an upper limit of 3600, to hold to a scale not exceeding 1/3 for the models of screw propellers.

Theoretical considerations developed by M. Jouguet, and which would require too much space for extended notice here, show that this departure from the law of Huyghens, Mariotte and Pardies is due to the compressibility of the air, which becomes of importance at the high relative velocities of the blades and the air which are realized in the case of screw propellers.

These same theoretical considerations show that, for the speeds of advance used in aviation [25 to 30 meters (82 to 98.4

ft.) per sec.] a more exact law of similitude may be realized by corrections for the perturbation due to the viscosity of the air. To this end, it would serve to test the model at a speed equal to that of the aeroplane multiplied by the linear ratio between aeroplane and model.

If V is the speed of advance of the aeroplane and v that of the model at the scale ratio of $\frac{1}{\lambda}$, we have for the resistances of the air

$$\frac{R_V}{r_v} = \frac{K_V}{K_v} \lambda^2 \left(\frac{V}{v}\right)^2$$

If then we take $\frac{V}{v} = \frac{1}{\lambda}$ and $K_V = K_v$

we shall have $R_V = r_v$.

2. The displacement of a body under test through the air and the movement of the air with respect to a fixed body.

M. de Guiche has found for certain surfaces, notably for planes, distributions of pressure differing from those found by M. Eiffel. The latter has found, on the following face, only zones of pressure below the normal. M. de Guiche, on the contrary, for angles of incidence less than 20°, has found zones of pressure above the normal. Now the experiments in the two cases are very numerous and have been made with the greatest care. The differing results are then due to phenomena which appear in one of the modes of experimentation and not in the other.

The principle of relative motion is, in fact, not in question. What is in doubt is, whether, by the method of the tunnel, conditions can be developed which permit the assumption of equal relative motions in the two cases.

Let us consider a solid which moves with a velocity V in an indefinite medium originally at rest. At a given moment, far from the origin of movement, we may distinguish two regions in the space surrounding the body under investigation. One, formed of regions far removed from the solid, is not disturbed by the passage of the latter. At each of these points there is a velocity relative to the moving body of $-V$, equal, parallel and in the opposite direction to the velocity of translation V. The other region, situated near the body, is disturbed by the movement of the latter. Relative to the moving body, each point in this region has a velocity which is the resultant of

(a) A velocity $-V$ equal, parallel and opposite in direction to the velocity of the body.

(b) A velocity W due to the motion of the solid body.

This last velocity is a function of the disturbance brought into the medium by the passage of the body. It depends, furthermore, not only on the form of the body, on its dimensions, on the degree of polish of its surface, but also on the properties of the medium, its viscosity and the initial conditions of the movement.

Let us now assume the solid fixed and the surrounding medium to be displaced relative to it. This mode of experimentation should realize the conditions which require the application of the principle of relative movement. For this it is necessary that, from the moment when permanent conditions are established, the velocity at each point in the medium disturbed by the presence of the solid should be equivalent to the resultant of the two velocities $-V$ and W.

It is assumed in the method of the tunnel that such a resultant is obtained by giving to the fluid, in the undisturbed parts, a velocity $-V$. In particular, in the experiments in the midst of a moving column of air, it is assumed that it suffices to draw the air into one of the extremities of the tunnel sufficiently removed from the body placed in the interior. Now this fact does not imply that the velocity, in the disturbed part, is equivalent to the resultant of the two velocities $-V$ and W.

The viscosity of the fluid may intervene in such manner as to cause the state of the disturbed region to depend on the mode of producing the relative motion. Experiment alone can decide.

Now, as we shall see, at a later point, comparison of the experiments of M. de Guiche and of M. Eiffel shows that the phenomena observed in the method with the tunnel are not always identical with those which result from the movement of a solid body in free air.

We should note, however, that the study of pressures below normal made at the Institute of Saint-Cyr (method by use of car) do not show, in comparison with the experiments of M. Eiffel, the differences which M. de Guiche has noted. The question

involved here does not seem to be completely elucidated. In particular it seems desirable that M. de Guiche should reproduce certain of his experiments with his apparatus at Saint-Cyr in order to establish the atmospheric pressure in the free branches of the manometers used for measuring the pressures above and below the normal.

In any case, the solution of such a question can be of interest only from the view point of the science of aerodynamics. It does not present the same interest from the view point of practical aviation. From the latter view point, we consider as equivalent the two methods of producing the relative movement between the air and the body under investigation.

3. The Aerodynamics of the Plane—Planes orthogonal.

When the body is a thin orthogonal plane we may, in practice, take for the coefficient K of equation (1) the value $K_{90} = 0.080$ (0.0015 lb. sec. ft.). M. Eiffel has found that this coefficient varies

(a) With the extent of the surface,

(b) For a surface of given extent, with the form of the contour.

M. Soreau has proposed, in order to represent the various values found by M. Eiffel, the empirical formula:

$$K_{90} = \frac{0.0888\, S^{0.05}}{1 + 0.116\, S^{0.05}}$$

The surfaces on which M. Eiffel has operated are, in general, too small; the perturbations caused by the influence of the boundaries are preponderant. It would be necessary to operate on surfaces of which one of the sides has a length greater than 1 meter (3.28 ft.). With such surfaces, steady conditions, characterized by isobars, parallel to the sides of the plate, would be established and would assume the preponderance. We might thus determine for K_{90} a value characteristic of this regular regimen, and which would be independent of the area of the plate and of the form of its contour.

Experiments over so wide a field have not been made. However, M. de Guiche, studying a rectangular plate 100 cm. by 60 cm. (39.4 in. by 23.6) found $K_{90} = 0.083$.

In order that the thickness of the plate normal to the direction of relative motion may have any influence, it is necessary that this thickness be of the order of the transverse dimensions of the plate. From the point where the thickness of the plate is equal to one of the transverse dimensions, the coefficient K_{90} varies, first decreasing, and then increasing as the thickness increases.

M. Eiffel has studied, by means of the fan, the combination formed by two thin orthogonal planes separated by a variable distance. He has been led to the following conclusions, applicable, for example, to disks 30 centimeters (11.8 in.) diameter.

(1) The force on the combination diminishes, first, in proportion as the separation increases. It passes through a minimum for a certain value of the separation, and then increases again.

(2) The force on the combination does not begin to exceed the force on an isolated plate until the plates are very considerably separated.

(3) The force on the combination has always been less than the sum of the forces on each of the plates taken alone. The effect of shielding due to the forward plate makes itself felt, even when the plates are very far apart.

(4) The pressure on the plate exposed directly to the wind is approximately independent of the separation, but it always moderately exceeds the pressure on an isolated plate.

(5) The shielded plate is first drawn toward the forward plate. This attraction varies, first increasing in absolute value with the separation of the plates, passing through a maximum corresponding to the minimum of the total force, and then decreases to zero. This attraction is then changed into repulsion, of which the absolute value increases with increase in the separation of the plates.

(6) On the plate directly exposed to the wind, the mean pressures on the leading face (above normal) and on the following face (below normal) are sensibly independent of the separation of the plates.

(7) The mean pressures on the leading and following faces of the shielded plate are below normal, so long as the plates are not very far apart.

The mean drop in pressure on the leading face is, in absolute value, at first greater than that on the following face.

The total mean force on the plate is such as to tend to bring together the two plates (attraction for the shielded plate).

For a suitable separation of the two plates, not only the mean forces but also the forces at each point on the shielded plate are sensibly zero, and the resultant mean force is zero.

Finally, when the separation of the plates increases beyond a certain limit, the mean total pressure on the shielded plate becomes such as to tend to produce further separation (repulsion of the shielded plate).

4. Aerodynamics of the Plane. Plane inclined to the direction of relative movement. Plane isolated.

(a) Distribution of pressures, above and below normal.

(1) As soon as the plane exceeds certain dimensions there is found, on both the leading and following faces, a central zone where a regular regimen becomes established. The existence of this zone is shown by isobars parallel to the attacking edge. In this entire zone the phenomenon is defined by the distribution of the pressures along the line of steepest gradient. The study of this serves, in many cases, to characterize a surface.

M. Eiffel has studied only this mode of distribution of pressures above and below normal. The dimensions of the sides of the planes which are normal to the wind were, in some cases, too small and the experimenter was able to observe only the pressures in the disturbed zone near the boundaries of the plane.

(2) The boundary zones of disturbance have a width sensibly constant, which is, for the leading edge, some 20 cm. (7.9 in.), and for the following edge, from 40 to 50 cm. (15.8 to 19.7 in.). In consequence, in order that the regular regimen may be in evidence the plane should have a spread at least twice the width of the zones of disturbance.

(3) Special study of the leading face of plane:

Angles of incidence less than 20°.

Bourlet has proposed the following formula deduced from theoretical considerations:

Total pressure on leading face:

$$P = \frac{4}{3}\frac{C}{100}(\sin i)^{0.4} S l^{-\frac{1}{4}} V^2$$

System of units, kg.-meter-second.

S = area.
l = depth in direction of wind.
V = speed.
C = coefficient which depends on the form of the plane.
C is of the form

$$C = A - B\frac{L}{S}$$

where L = perimeter of plane.

M. de Guiche has found by experiment:

$$A = 3.8 \qquad B = 0.11$$

With these values the formula becomes:

$$P = \left(0.050 - 0.0014\frac{L}{S}\right)(\sin i)^{0.4} S l^{-\frac{1}{4}} V^2$$

For surfaces sufficiently large

$$P = 0.050\ (\sin i)^{0.4} S l^{-\frac{1}{4}} V^2$$

This formula is not applicable for angles of incidence, i, such that the pressures measured along a line of greatest slope become less than normal. The pressures, thus measured, decrease in fact continuously from the forward edge. They may even become negative in the vicinity of the following edge. The existence of pressures below the normal comes into evidence for smaller angles of incidence as the ratio of the fore and aft to the transverse dimensions is smaller. In the experiments of M. de Guiche it was determined that such pressure below normal began to appear as follows:

For surface 180 x 120 cm. (70.87 x 47.24 in.) from $i = 20°$.
For surface 180 x 80 cm. (70.87 x 31.50 in.) from $i = 10°$.
For surface 180 x 40 cm. (70.87 x 15.75 in.) from $i = 8°$.

The lateral turbulent zones show pressures less than those found at an equal distance from the attacking edge.

(4) Special study of leading face of plane:

Angles of incidence exceeding 20°.

The formula of Bourlet is not applicable. The maximum pressure is no longer at the leading edge. This becomes, when the angle increases, a zone of lesser pressure like the three other sides.

(5) Special study of following face of plane:

Angle of incidence less than 20°.

In the regular zone (isobars parallel to the attacking edge), for depths of plane sufficient to render negligible the influence of the boundaries, the pressure at a given point and for a given angle of incidence appears to be a function solely of its distance from the attacking edge.

M. Eiffel has not observed counter pressures on this back face of the plane. On the other hand, M. de Guiche has very clearly observed them. This is one of the differences between the results obtained by one or the other of the methods of experimentation.

(6) Special study of following face of plane:

Angles of incidence exceeding 20°.

There are no longer any counter pressures on the following face. The distribution of the pressures below normal becomes quite uniform.

(b) Total Force.

(1) According to M. Eiffel, the total force passes through a maximum for an angle of incidence of about 37°.

According to M. de Guiche the total force increases up to angles of 45°; beyond that it remains sensibly constant.

For angles of inclination comprised between 0 and 10°, rectangular plates for which the transverse dimensions are greater than the fore and aft are subject to the greatest total pressures.

For angles less than 10°, the following formula may be taken:

$$\frac{Ki}{K_{90}} = \left(3.2 + \frac{n}{2}\right)\frac{i}{100} \quad (i \text{ in degrees})$$

(2) The center of pressure, that is to say, the point where the line of the resultant force intersects the thin plane, is at the center of the plate when the plane is perpendicular to the line of relative movement. In proportion as the inclination decreases, the center of pressure advances toward the leading edge, even to the smallest values of the angle.

(3) The resultant of the air pressures is, for inclinations exceeding about 10°, sensibly perpendicular to the plane. For

smaller angles of inclination the angle of the resultant with the perpendicular to the line of relative motion is greater than the inclination of the plane; the resultant is inclined to the normal to the plane behind this normal.

(4) Thick plates.

If the thickness of a plane plate is increased, leaving the ends plane and at right angles with the two faces, there is introduced but slight change as compared with the phenomena described for thin planes, except that the head resistance is increased as the thickness is made greater.

(5) Thick plane plate with leading or following edge provided with cutwater.

With a cutwater on the following edge, the ratio drift/lift is notably less than without. It is more advantageous to fine the following than the leading edge.

It is preferable to have the forward cutwater edge toward the lower rather than the upper side.

Finally, the law of variation of the center of force is entirely different from that indicated above for planes.

5. Aerodynamics of the Plane. Planes in Tandem.

M. de Guiche has experimented with three elements of aluminum of 1 meter (39.4 in.) spread, 20 cm. (7.9 in.) fore and aft width and 8 mm. (0.32 in.) thickness. He has studied the distribution of the pressures along the median line of maximum gradient, forward and aft, in the three following cases:

(a) Elements in contact (interval zero).

(b) Elements separated by interval of 5 cm. (1.97 in.).

(c) Elements separated by interval of 10 cm. (3.94 in.).

(1) Study of Forward Face.

The character of the variation of the diminution of the pressures from the leading to the following edge is the same for the separated elements as for those in contact. The pressure diminishes continuously from the leading to the following edge.

Second Element. If we consider the second or middle element, the maximum pressure in the vicinity of the leading edge does not become sensibly equal to that for the leading edge of the

first element unless the separation of the two elements is equal to 10 cm. (3.94 in.). For the distance of 5 cm. (1.97 in.) the maximum pressure on the second element is inferior to the maximum pressure on the first element. As regards the forward face, then, the second element does not behave as if it were alone unless the distance of the two elements is equal to 10 cm. (3.94 in.).

Third Element. The maximum pressure near the leading edge is always clearly less than that for the second element.

Total Pressure on Forward Face. For angles of incidence less than 15°, it is less for the separated elements than when they form a continuous surface.

For angles between 15° and 25°, it is greater for the separated than for the continuous elements.

For angles greater than 25°, it is sensibly the same for the separated as for the continuous elements.

(2) Study of Rear Face.

The first element shows pressures below normal, similar to those for the isolated plane (no pressures above normal).

On the second element, similarly, only pressures below normal are observed. For small angles of incidence (4° to 6°) the drop below normal pressure near the forward edge is much more pronounced than for the first element.

This relation is less marked in proportion as the angle of incidence is increased; it is even reversed for angles exceeding 30°.

On the third element, positive pressures are observed for very small angles of incidence and then pressures below normal for greater angles.

As to the total drop in pressure on the rear face, it is in general less for the separated than for the continuous elements.

(3) Total Force.

This is, in general, less for the separated than for the continuous elements.

The center of pressure of the combination, defined by its distance from the forward edge of the first element, changes less (with variable angle of incidence) for the elements with separation than when continuous.

6. Aerodynamics of Plane Aerofoils, Arranged Stepwise.

M. de Guiche has studied the disposition of planes stepwise.

The planes are parallel; the leading edge of each element is on the normal passing through the following edge of the preceding element.

The steps are arranged in two ways: direct, if in going in the direction of the wind one descends the steps; reverse, if in going in the direction of the wind one mounts the steps.

The planes, of brass, which M. de Guiche has used, have a spread of 100 cm. (39.4 in.), a depth of 12 cm. (4.7 in.), a thickness of 4.5 mm. (0.18 in.); the separation of the planes was either 2 cm. (0.79 in.) or 4 cm. (1.58 in.). The number of planes was three.

(1) Planes Direct. Forward or Lower Face.

First element: Diminution of pressure from the leading to the following edge.

Second element: Inversely as compared with the case of planes in tandem, the leading edge is subject to a notable negative pressure and the maximum positive pressure is produced to the rear of the leading edge.

Third element: The maximum positive pressure is produced at a point lying behind the leading edge, but, in general, the leading edge is not subject to a negative pressure.

These phenomena (relative to the second and third elements) become more pronounced for the separation of four centimeters than for that of two centimeters.

(2) Planes Direct: Following or Upper Face.

First element: This is subject to a negative pressure. It behaves nearly as though it were alone.

Second and third elements: The negative pressures are less marked than for the first element. There are even positive pressures produced near the following edge.

(3) Planes Reverse: Forward or Lower Face.

This system has been studied at angles of incidence of 6°, 8° and 15°, and for a separation of the elements equal to 4 cm. (1.58 in.).

First element: If for an incidence of 6° we consider the displacement cylinder of the first element, it is seen that the second

and the third elements project into this cylinder. There results, for this element, a diminution of pressure on the leading edge. The latter is no longer subject to the maximum pressure, which is carried aft. This phenomenon disappears at incidences of 8° and 15°. The decrease in the pressure then follows continuously from the leading edge aft.

Second and third elements: For angles of incidence of 6° and 8°, the phenomena are the same as for the steps in direct form.

At 15°, the second element is almost shut out by the first; this element is subject entirely to a negative pressure. The third element is subject in part to positive pressure; there is, however, negative pressure near the leading edge.

(4) Planes Reverse: Rear or Upper Face.

At the incidence of 8°, the negative pressure on the second and third elements is marked near the leading edge; it is from 1.5 to 2.5 times as great as on the first element.

There is here a phenomenon similar to that which has been observed with Venturi tubes disposed in series.

(5) Total Force.

The total force on the system is less than for a continuous plane of the same surface.

The drift is more considerable on account of the more numerous edges.

This type of combination is not to be recommended.

M. Eiffel has determined the total force and the drift for planes parallel to each other and without stepwise interval. We shall return later to the consideration of curved aerofoils, for which the results are similar.

7. Aerodynamics of Curved Aerofoils: Isolated.

There has been made in France a very considerable number of experiments on curved aerofoils, isolated.

M. Eiffel has operated on models; a very considerable number of them have a spread of 90 cm. (35.5 in.) and a depth along the chord of 15 cm. (5.9 in.) (aspect ratio = 6). He has not used aerofoils of less than 45 cm. (17.8 in.) spread with the same depth as above. M. Eiffel considers the mean surface, that

is, the surface equidistant from the two actual surfaces of the aerofoil. The nominal height of the curved contour is the ratio of the height of the arc for this mean surface to the chord.

M. de Guiche has studied aerofoils for which the spread is 170 cm. (67 in.) and the depth along the chord, 120 cm. (47.3 in.) (aspect ratio = 1.4). However, in certain cases, the depth was reduced to 60 cm. (23.6 in.).

At the Institute of Saint-Cyr, there have been studied aerofoils for which the spread varies from 5 to 10 m. (16.4 to 32.8 ft.), the depth varying from 2 to 2.5 m. (6.56 to 8.40 ft.).

(a) Determination of the Pressures Positive and Negative.

(1) Beyond a certain value of the spread, there develops a regular regimen, involving the entire surface with the exception of two lateral turbulent bands. This regimen is indicated by isobars parallel to the leading edge.

It appears that the fairly uniform width of the bands of turbulence does not exceed 20 cm. (7.9 in.). It is desirable, therefore, to use no aerofoils with a spread less than 40 cm. (15.8 in.).

(2) Each one of the faces of the aerofoils joins in the support, but not equally. The pressures supported by the lower face, at ordinary incidences of flight, assume a smaller share of the total force than the negative pressures on the back.

(3) The lower face is subject to the influence of the upper face, but is itself without influence on the latter.

(4) The curvature of the back determines the distribution of the negative pressures; it deviates upward the lines of air flow.

An exaggerated height of the arc for the curvature on the back produces a harmful counter pressure on the following edge of the wing.

The displacement of the maximum height of arc towards the leading edge carries a corresponding displacement of the maximum value of the negative pressure, and, in consequence, a reduction in the drift value.

The ideal would be to suppress, in an aerofoil, harmful pressures, positive or negative (that is to say, to have on the upper face only negative pressures and on the lower face only positive pressures), and to find the pressure of the atmosphere

only at the following edge, where the lines of air flow join together without shock. The key of the problem seems to involve the maximum height of the arc and its position between the leading and following edges.

(5) The negative pressures are not modified by the form of the leading edge; this has only a local influence. It has been said that this edge should be rounded, under a penalty of a reduction of the negative pressures on the back of the aerofoil. There is nothing to this. It is better to make it sharp in order to facilitate its penetration.

A French engineer, M. Constantin, has proposed a concave form for the leading edge. M. de Guiche found that this form did not show the advantages which its inventor had anticipated. However, it is only fair to say that by means of the fan, M. Eiffel arrived at an opposite conclusion.

(6) In general, for angles involved in aviation, the modes of variation of pressures, positive and negative, are similar in all the results obtained by different experimenters.

The modes of variation of the negative pressures on the back fall into two principal types.

(a) The negative pressure starts from a certain value, often small, near the leading edge; it then increases continuously passing aft, passes through a maximum, then decreases regularly to the following edge.

This mode of distribution is found with thick aerofoils (monoplane type) of 80 to 100 mm. (3.15 to 3.79 in.) maximum thickness.

(b) The negative pressure is very pronounced at the leading edge. Passing aft, the value decreases, passes through a minimum, then increases, passes through a second maximum, in general less than the first, and finally decreases regularly to the neighborhood of the following edge.

M. Eiffel has found such modes of variation with thin planes (biplane type) of 20 to 35 mm. (0.79 to 1.38 in.) thickness.

The combination of the two modes (a) and (b) is found very marked in the case of aerofoils presenting steps on the back. The lower face has a regular curvature, but the upper face is formed stepwise. The combination thus constituted gives the

impression of being formed of two or three aerofoils joined one behind another.

With one projecting ridge (up to incidences of 5°) there is found, in going from the leading to the following edges, a maximum of negative pressure, a minimum, and finally a maximum.

With two projecting ridges (up to incidences of 5°) there is found a maximum of negative pressure, a minimum, a maximum, a minimum and finally a maximum.

For an incidence of 10°, the distribution is the same as for mode (b), but with several maxima and minima in the depth of the surface (one projecting ridge, two minima and a maximum; two projecting ridges, two minima and two maxima).

(7) We have now examined the mode of distribution of the negative pressures on the back of the aerofoil. If next we consider the lower face, there are found, in general, no negative pressures except near the following edge. On the remainder of the face the pressures are positive. In general, in passing from the leading edge aft, the pressure increases first a little, passes a maximum, and then decreases to the following edge.

However, certain aerofoils (with projecting ridges on the back) show, for angles of incidence near 0°, negative pressures near the leading edge.

(8) Two aerofoils of the same spread and with similar but not equal sections are not comparable.

(9) However, as pointed out by M. de Guiche, it is the aerofoil with the largest value of the aspect ratio which presents the most marked advantages. It is desirable that extended investigations should be made on aerofoils of different depths with the same spread, that is to say, on aerofoils with varying values of the aspect ratio and geometrically similar in section, in order to determine if, for a given section, there is a best value of this ratio, and what is this value.

It may be noted that M. Eiffel considers 6 as this best value of the aspect ratio.

(6) Total Resultant and Point of Application.

(1) The total resultant force continuously increases with the angle of incidence, at least within the range of interest in aviation.

As to the force center (intersection of the total resultant with the chord of the section) it approaches nearer and nearer to the leading edge as the angle of incidence increases from zero, at least within the range involved in aviation. This is the inverse of what takes place with a plane.

If we pass beyond the angles involved in aviation (angles less than 10°), the force center again recedes from the leading edge as the incidence increases.

(2) If aerofoils of varying thickness have the same surface of mean curvature, they are the more advantageous as the thickness is less.

M. Eiffel has shown, in effect, that under these conditions the ratio $\frac{K_x}{K_y}$ continuously increases with the thickness of the aerofoil.

It follows that if it is desired to compare the qualities of two aerofoils, it is necessary to use only forms with the same maximum thickness and with the same aspect ratio.

(3) A distinction may be drawn between thick and thin sections for aerofoils.

Thick aerofoils are suited more especially to monoplanes, because they must contain solid structural members. Such aerofoils, in general, have a thickness of about 90 mm. (3.55 in.) at one third and 50 mm. (1.97 in.) at two thirds of the depth from the leading edge.

Thin aerofoils are used for biplanes. Their maximum thickness varies between 30 and 90 mm. (1.18 and 3.55 in.).

For good, thick aerofoils and for an angle of incidence $i = 5.6°$ we have $\frac{K_x}{K_y} = 0.079$, with $K_x = 0.0043$ and $K_y = 0.055$.

These are values suited to a monoplane.

With $i = 2.1°$ we have $\frac{K_x}{K_y} = 0.069$, with $K_x = 0.0019$ and $K_y = 0.027$.

But this angle is too small for a normal angle of incidence for a plane.

For a thin aerofoil of thickness equal to 63 mm. (2.48 in.) and an angle of incidence $i = 5.3°$ we have $\frac{K_x}{K_y} = 0.058$, with $K_x = 0.0023$ and $K_y = 0.040$.

For a thin aerofoil of thickness equal to 45 mm. (1.77 in.) and an angle of incidence $i = 8°$ we have $\frac{K_x}{K_y} = 0.091$, with $K_x = 0.0055$ and $K_y = 0.060$.

These values are suited to the wings of biplanes.

(4) The lateral edges of the wings exert a feeble influence on their quality. However, the trapezoidal form with the larger base behind seems more effective than the rectangular form.

(5) With certain forms of wing (wing provided along the leading edge with a concave edge forming a sort of crest, wing with thick, rounded leading edge), M. Eiffel has found discontinuities in the curves of K_x and K_y in relation with different regimens of the flow of the air. But such phenomena are exceptional.

8. Aerodynamics of Curved Aerofoils: Combinations of Curved Aerofoils: Arrangement in Biplane.

M. Eiffel has determined the varying values of R_x, R_y, F_x, F_y, for the various parts of a Dorand biplane, these parts being subject to experimental investigation assembled in complete form, or separate.

This biplane consists of a principal cell formed of two identical planes 14.5 m. by 2.25 m. (47.56 ft. by 7.38 ft.). These planes are separated in height by a distance of 1.95 m. (6.4 ft.), that is, by a height sensibly equal to the depth of the plane. They are stepped a distance of 85 cm. (2.79 ft.), upper plane leading. They are joined by two series of 10 oblique struts. A forward equilibrator and a tail-plane element formed by two parallel planes are mounted on a cross-braced fuselage. These two elements are conjugate, constituting thus a secondary control, completely mobile. The tail-plane element forms with the principal planes a V angle, plainly marked.

(1) With an apparatus thus formed, the sustentation for the cell alone is notably greater than for the biplane entire. The tail-plane element, far from aiding in the support, receives on the back the air deviated by the principal planes. It thus reduces the carrying power.

(2) The influence of the two principal parallel planes, separated by a distance sensibly equal to their depth, is evi-

denced by a loss of carrying power of about 20% of that for the complete but isolated cell. If we denote the total carrying surface of the planes by S, the effective supporting surface of the biplane is $\frac{S}{1.2}$.

(3) The upper plane, in the presence of the lower plane, behaves as though it were isolated. The lower plane, under the influence of the upper plane, loses about one third of the carrying power of the isolated plane.

In a biplane, the lower plane then operates poorly with regard to carrying power. It may, without inconvenience, be reduced, if such reduction brings other advantages.

(4) For the ordinary angles of incidence, the head resistance of all the parts aside from the principal cell is about 7% of the sustentation. The head resistance of all parts aside from the planes is about 10% of the sustentation.

These values are applicable to biplanes.

(5) The stepwise arrangement of the planes does not give any appreciable advantage with regard to sustentation and head resistance, but renders the construction more difficult.

Such a stepwise arrangement is not, in general, to be recommended.

9. The Aerodynamics of Curved Aerofoils: Combinations of Curved Aerofoils: Aerofoils in Tandem.

Let us consider two aerofoils of different spread, situated one behind the other (planes in tandem). If the aerofoil with the smaller spread is leading, it is said that the two elements form a "duck" type. If the aerofoil with the lesser spread follows, it is considered equivalent to the "ordinary monoplane" type.

The angle made by the chords of the two aerofoils in the plane of symmetry is the angle of décalage, or simply the décalage, of one of these planes with relation to the other.

If, in the plane of symmetry, the leading edge of the following plane is in the prolongation of the chord of the leading profile, it is said that the vertical displacement of the two planes is zero.

M. Eiffel has made a series of experiments with two planes

of the same type, of which one has an aspect ratio of 6 [90 x 15 cm. (35.5 x 5.9 in.)] and the other of 3 [45 x 15 cm. (17.8 x 5.9 in.)].

The "duck" type has been studied (vertical displacement zeró) with values of the angle of décalage varying from 2° to 6° and separations of the planes equal to 4/3 and 8/3 their width.

The "ordinary monoplane" type has been studied with a décalage of 4° and separations of the elements identical with the preceding.

Finally M. Eiffel has studied the tandem type with equal elements.

The angle of incidence of this combination of elements is the angle relative to the chord of the leading element.

(1) "Duck" Type.

From the view-point of sustentation and of head resistance, it is advantageous to increase the separation of the elements, and not to exceed a certain angle of décalage.

Suppose that, for various angles of incidence, there have been determined the total resultants of the air forces on the combination of elements. We shall denote the aggregate of these by the term "bundle of resultants".

In the study of this bundle, the following results are obtained:

(a) The bundle is always located toward the middle of the interval which separates the two elements. It is then in this region that the center of gravity of an aeroplane of this type should be found.

(b) For a given distance between the elements, the bundle is so much the more extended as the décalage is greater.

(c) For a given décalage, the bundle is so much the more extended as the distance between the elements is greater.

This longitudinal change in the bundle of resultants has relation with the longitudinal stability of an aeroplane of this type.

(d) For a given distance between the elements, the bundle of resultants is displaced toward the forward element in proportion as the décalage is increased.

In an aeroplane of the "duck" type, if the décalage is increased it is necessary to move the center of gravity forward.

Let us suppose that in such an aeroplane the center of gravity is on the propeller shaft. For equilibrium under a certain angle of incidence, it is necessary that the resultant corresponding to this angle pass through the center of gravity. From this, let us drop normals on the other resultants of the bundle, resultants which correspond to varying angles of incidence. It is then easy to calculate the moments of these resultants with reference to the center of gravity. These are the stabilizing moments. They are considered positive when they tend to turn their lever arm in direction inverse to the movement of the hands of a watch. They are negative in the opposite case.

Let us represent these stabilizing moments by setting off as abscissae the angles of incidence, and as ordinates the stabilizing moments.

The aeroplane is longitudinally stable when, for increasing values of the angle, the curve of the moments descends continuously from left to right, cutting the axis of abscissae at the point of equilibrium. It is unstable when, for increasing angles, the curve of moments rises from left to right.

When study is made of such curves for the "duck" type, it is seen that, from the view-point of stability, it is not well to realize too great an angle of décalage for the two elements.

The manageability of the aeroplane requires also that the décalage shall not be too great, and that the distance between the elements shall also not be too considerable. It is desirable that the stabilizing moments should not exceed 50 kg.m. (361 lb. ft.).

From this same view-point, it is desirable that the center of gravity of the aeroplane should not be too low.

M. Eiffel has studied a vertical displacement of the elements approximately equal to one quarter of the depth of an element. The effect of such a displacement is so little sensible that it may be taken as negligible.

(2) "Ordinary Monoplane" Type.

The influence of the elements, one on the other, is evidenced by a reduction of the sustentation and by an increase in the head resistance in relation to the sustentation and to the head resistance of the elements without mutual action.

The relative diminution of the sustentation is independent

of the fore and aft separation of the elements. The resultants are grouped on the forward element. The center of gravity of an aeroplane provided with such planes must be located in this region.

The bundle of the resultants is opened out considerably when the distance between the elements is doubled.

(3) Tandem with Equal Elements.

From the view-point of sustentation and of head resistance, this type is clearly inferior to the "ordinary monoplane" type.

In this last type, it is therefore not advantageous to increase, beyond a certain limit, the spread of the tail-plane element.

The biplane arrangement is also preferable to the tandem type with equal elements.

It may be said that this last arrangement is not to be recommended in the construction of apparatus for aviation.

(4) In a tandem, the following element is influenced by the forward element. M. Eiffel has studied the conditions of operation of such an element.

(a) If we designate by i_a the angle of incidence of the influenced element to the path of the combination of the elements, the force on this element is equal to the force which would be exerted on the element isolated, for which the angle of incidence would be

$$i_r = i_a - \beta$$

The angle β depends on all the factors which fix the relative positions of the elements, that is to say, on the distance between the elements, on the vertical displacement, on the angular décalage and on the relative spread of the two elements.

(b) Whatever may be the characteristics of the combination of the elements, the drift of the influenced element is practically equal to that for the same element isolated.

From the view-point of the drift, there is no need of distinguishing between the real angle of incidence i_r and the apparent angle i_a.

(c) Whatever may be the characteristics of the combination of elements, the leading element of a tandem behaves like an isolated element.

(d) Case of Tail Planes.

When the law of variation of the real angles of incidence i_r in relation to the apparent angles i_a is known, and also the values of K_y as a function of the angles of incidence for the isolated tail plane, it is possible to determine the force acting on a tail plane placed behind an ordinary monoplane.

Let us take an example. Consider an ordinary monoplane of which the principal plane has dimensions of 10 x 2 m. (32.8 x 6.56 ft.) and the tail element is formed by a plane 3 x 1 m. (9.84 x 3.28 ft.) placed 5 m. (16.4 ft.) behind the principal plane, with vertical displacement zero. Let us suppose that the angular décalage of the tail element (form V) with relation to the principal plane is 6°. If the normal angle for horizontal flight is 6° (angle of the principal plane with the horizontal trajectory) the apparent angle of the tail plane making a V with the principal plane is zero.

Let us assume that the law of variation of the real angles of incidence as a function of the apparent angles gives —5.4° for the real angle of incidence of the tail plane. The study of the plane gives then $K_y = -0.02$. The force on the tail plane, for a speed of 30 m. (98.4 ft.) per second, is $-0.02 \times 3 \times 900 =$ —54 kg. (119 lbs.).

Now if the tail plane were isolated and making with the trajectory an angle of zero, the force would be zero. Such a negative force of 54 kg. (119 lbs.) is of the greatest importance with regard to equilibrium.

10. The Apparatus of Aviation.

M. Eiffel has made, by the fan method, a great number of tests on models of certain forms of apparatus. From these tests we may deduce a certain number of rules, which we shall state at a later point; rules which may serve to establish the preliminary design of an aeroplane.

The interesting experiments at the Institute of Saint-Cyr on an aeroplane entire (by means of the car) or on an aeroplane in free flight are not yet sufficiently numerous to give ground for rules of construction for aeroplanes. However, these results merit statement.

(1) M. Eiffel has shown fully the use which may be made of a study of the logarithmic diagram for the conditions of opera-

tion of an aeroplane in horizontal movement. It is thus that he has studied the régime of maximum speed for a given power and also the economical régime.

The maximum speed for horizontal flight depends more especially on the motor installed on board the avion (see Fig. 3 point i_1).

The economical régime, or régime of minimum power for given weight (see Fig. 3 point i_3), is of great interest. In fact, when an avion rises with the maximum vertical speed, it is placed in conditions such that the useful power developed shall be minimum, the excess of power being utilized for raising the aeroplane to the greatest possible height.

The limiting speeds of an aeroplane for planing are:

(a) The maximum speed of normal horizontal flight

(b) The speed corresponding to the minimum slope.

This minimum is defined by the minimum value of $\frac{R_x}{R_y}$. The angle which corresponds to this minimum is the best angle of planing of Col. Ch. Renard.

The motive quality or sustaining quality of an aeroplane introduced by the constructor Louis Bréguet has for value

$$g = \frac{\rho\sqrt{\frac{Q}{S}}}{\rho\frac{P_M}{Q} - V_m};$$

in which

ρ = efficiency of propeller.

$\frac{Q}{S}$ = weight in kg. carried per square meter of surface.

$\rho\frac{P_M}{Q}$ = useful work (kg. m. sec.) of the motor propeller combination per kilogram of weight carried. This power corresponds to the efficiency ρ of the propeller and to the full power P_M of the motor.

V_m = maximum vertical speed in meters per sec.

(2) Ordinary Monoplanes.

The following coefficients result from the experiments of M. Eiffel.

(a) The loads sustained in relation to the sustaining sur-

face vary between 25 and 35 kg. per sq. m. (5.12 to 7.17 lb. per sq. ft.).

(b) The maximum speeds of horizontal flight are comprised between 26.4 and 33.3 m. per sec. (86.6 and 109.3 ft. per sec.) or 95 and 120 km. per hour (59 and 74.6 mi. per hour).

The speeds for the economical régime vary between 19.44 and 25 m. per sec. (63.8 and 82.0 ft. per sec.) or 70 and 90 km. per hr. (43.5 and 55.9 mi. per hour).

Let us give the name "portance" to the ratio:

$$\frac{Q}{S} \times \frac{1}{V^2}$$

The portance for maximum speed of horizontal flight varies between 0.025 and 0.040. The portance for economical speeds varies between 0.040 and 0.070. The values utilized vary, therefore, between 0.025 and 0.070.

(d) The maximum useful power (max. horizontal flight) per 100 kg. (220 lb.) of weight carried varies between 8 and 11 hp.

The minimum useful power (economical régime) per 100 kg. (220 lb.) of weight carried varies between 5 and 6 hp.

The useful power expended in raising 100 kg. (220 lb.) with the maximum vertical speed varies between 1.5 and 6 hp.

(e) The maximum vertical speeds vary between 2.3 and 4.25 m. per sec. (7.55 and 13.94 ft. per sec.).

(f) Let us assume 6 hp. per 100 kg. (220 lb.) for the economical régime.

Let there be an expenditure of 2 hp. per 100 kg. (220 lb.) for climbing. This permits of raising 100 kg. (220 lbs.) a distance of 450 m. (147.6 ft.) in 5 minutes.

In a preliminary design we may assume a useful power of 8 hp. per 100 kg. of weight carried.

If the propeller has a mean efficiency of 0.70, the power developed on the shaft is $8/0.7 = 11.5$ hp. per 100 kg. of weight carried.

In a preliminary design for a monoplane, it is necessary to count on 11 to 12 hp. per 100 kg. (220 lb.) of total weight carried, say 120 hp. for an aeroplane of which the total weight in flying condition is equal to 1000 kg. (2204 lbs.). The consumption per hp. will be 0.32 to 0.52 kg. (0.71 to 1.15 lbs.) of

gasoline and oil, and the weight per hp. of the motor-propeller equipment, 2 to 3.2 kgs. (4.41 to 7.06 lbs.).

(g) The minimum values of $\frac{R_x}{R_y}$ are comprised between 0.16 and 0.20.

The best planing angles are comprised between 9° and 11.3° (mean angle = 10°).

The ratios of the limiting speeds for planing are comprised between 1.27 and 1.48.

(h) The values of the motive quality are comprised between 0.83 and 1.05.

(3) Biplanes.

(a) The loads carried in relation to the carrying surface vary between 15 and 30 kg. per sq. m. (3.07 and 6.15 lb. per sq. ft.).

(b) The maximum speeds for normal horizontal flight are comprised between 19.44 and 27.8 m. per sec. (63.8 and 91.2 ft. per sec.) or 70 and 100 km. per hour (43.5 and 62.1 miles per hour). The economical speeds vary between 13.9 and 22.2 m. per sec. (45.6 and 72.8 ft. per sec.) or 50 to 80 km. per hr. (31 and 49.7 miles per hour).

(c) The values of the portance for maximum speeds are comprised between 0.035 and 0.045 and the values for economical speeds between 0.060 and 0.065.

The values utilized lie between 0.035 and 0.065, that is to say, within narrower limits than for monoplanes.

(d) The maximum useful power per 100 kg. (220 lb.) of weight carried varies between 5 and 7 hp.

The minimum useful power per 100 kg. (220 lb.) of weight carried varies between 4 and 5 hp.

The useful power expended in lifting 100 kg. (220 lb.) with the maximum vertical speed varies from 0.5 to 2.5 hp.

(e) The maximum vertical speeds vary between 0.5 and 1.6 m. per sec. (1.64 and 5.25 ft. per sec.).

(f) Let us assume 5 hp. per 100 kg. (220 lb.) minimum useful power and 2 hp. per 100 kg. (220 lb.) for useful power required for climbing; it is seen that, for 100 kg. (220 lb.) of weight carried, there will be required a useful power of 7 hp., or

a power of 10 hp. absorbed by the shaft, assuming 0.70 for the mean efficiency of the propeller. This indicates a power of 100 hp. for an aeroplane of 1000 kg. (2204 lbs.).

For a biplane as compared with a monoplane, there is therefore required less power for the same weight carried.

(g) The minimum values of $\frac{R_x}{R_y}$ are contained between 0.142 and 0.228. The best planing angles range between 8° and 11°. The ratios of the limiting speeds of planing are comprised between 1.08 and 1.22.

(h) The values of the motive quality are comprised between 0.75 and 1.17.

(4) Hydravions.

(a) The loads in relation to the carrying surface vary between 30 and 40 kg. per sq. m. (6.15 and 8.19 lb. per sq. ft.).

(b) The minimum useful power per 100 kg. of weight carried is 5 to 6 hp. for hydravions with floats, and 4 to 5 hp. for hydravions with a boat fuselage.

For the first it is necessary to provide 12 to 13 hp. (on account of the surface tension which must be overcome as the floats leave the surface of the water) for the power developed by the motor on the shaft per 100 kg. of weight carried, or 104 hp. (say a motor of 120 hp.) for an equipment weighing 800 kg. The weight of the motors in flying condition represents about 45% of the total weight of the entire equipment.

For hydravions with a boat fuselage, it is necessary to count on 13 or 14 hp. per 100 kg. of weight carried, for the power developed by the motor on the shaft; or 560 hp. (two motors of 300 hp.) for an equipment weighing 4000 kg. (weight of motors = 45% of the total weight of the equipment).

(5) Experiments Made at the Institute of Saint-Cyr on a Blériot Aeroplane.

At the Institute of Saint-Cyr a study has been made by the car method on a two-passenger Blériot monoplane (side by side). This aeroplane has a horizontal tail plane in form of V with the main plane, enlarging toward the tail. The characteristics are as follows:

Total spread	11.10 m. (36.4 ft.)
Length	9.00 m. (29.5 ft.)
Area of the planes	25.35 m.² (272.9 sq. ft.)
Area of the projection of the fuselage (from its nose to the beginning of the tail plane)	3.27 m.² (35.2 sq. ft.)
Area of the tail plane	7.76 m.² (83.5 sq. ft.)
Area of the depth rudder	1.68 m.² (18.1 sq. ft.)
Angle of the chord of the planes with the tail plane	6°.

This aeroplane has been studied between the incidences (angle of the chord of the plane near the fuselage with the horizontal) of $+20°$ and $-2°$, for three positions of the depth rudder as follows:

(1) Position in the prolongation of the tail plane

(2) Position of maximum turning downward, the rudder making then an angle of 18° with the tail plane

(3) Position of maximum turning upward, the rudder making then an angle of 51° with the tail plane.

There is determined, as a function of the incidences, the values of R_x and R_y and the distances from the leading edge of the planes to the point where the resultant cuts the chord of the planes (in the projection on the plane of symmetry of the aeroplane).

The following results have been obtained.

(a) The values of R_x are sensibly the same for all positions of the depth rudder. The propulsive resistance is sensibly independent of the position of this rudder.

(b) For a given value of the incidence, the force R_y increases continuously in passing from the rudder position for upward turning to that for downward turning.

The surface of the depth rudder intervenes then in the sustentation.

It should be noted that the quotient $\frac{R_y}{25.35}$ does not exactly represent the portance of the aeroplane. It is really necessary to take into account the surfaces of the tail plane and of the depth rudder, which, with the variation of the incidence, have incidences positive or negative relative to the horizontal,

and thus intervene in a variable manner in the value of the portance.

(c) The position of what may be called the center of pressure (intersection of the resistance of the air with the chord) for a given value of the angle of incidence varies much with the inclination of the rudder.

For a given value of this angle, the center of pressure moves continuously from the leading edge as the change is made from the position for turning upward to that for turning downward.

For a given position of the depth rudder, for example, the position in the plane of the tail plane and for near-by positions, the center of pressure moves continuously toward the leading edge for a decreasing incidence, or moves from the leading edge for an increasing incidence. This is the opposite of what takes place with an isolated plane: the variation observed here shows the influence due to the tail plane and the depth rudder.

(6) Study of Aeroplane in Free Flight.

Experiments have been made at the Institute of Saint-Cyr on a Maurice Farman biplane and on a Blériot. If we call S the net carrying surface [17.65 m² (190 sq. ft.) in the Blériot] the quotient $\frac{R_v}{S}$ will measure the portance of the machine.

(a) The portance of any avion in volplane flight is less than that in normal flight, when the propeller blast acts on a carrying part of the avion (main plane, tail plane, or supporting tail).

For the Blériot this difference is shown to be 15%.

(b) Whenever, in slowing up, the propeller operates as a brake, the head resistance in volplane flight is greater than the head resistance of the avion without propeller. From this action as a brake there results an augmentation of the planing angle.

For the Blériot, fitted with a single screw [diam. 2.45 m. (8.05 ft.); pitch, 1.53 m. (5.0 ft.)] with a rotative speed of 400 to 500 r.p.m. there has been found 20 to 25% increase in the resistance.

11. Propellers at a Fixed Point.

Col. Ch. Renard had stated, for propellers geometrically similar, the following law:

$$\text{The ratios } a_o = \frac{\Pi_o}{n^2 D^4},\ \beta_o = \frac{P_e(o)}{n^3 D^5} \quad \ldots\ldots \quad (3)$$

are constant.

Researches undertaken at the Institute of Saint-Cyr have led to the following results:

The coefficients a_o and β_o of the formulae of Renard increase, in general, a little with the rotative speed; however, for certain propellers these coefficients decrease slightly as n is increased, and then increase with further increase of n. The variations in the values of these coefficients are, however, so small that for ordinary values of the rotative speed they may be considered constant.

Col. Renard had also introduced the idea of the quality of a sustentation propeller. This is defined as

$$Q = \frac{a_o^3}{\beta_o^2} \times \frac{4}{0.08\,\pi}.$$

This quantity depends especially on the pitch of the propeller. It is smaller as the pitch is larger. The product of the pitch by the quality is sensibly constant for propellers geometrically similar.

12. Propellers Advancing Relative to the Medium.

(1) For propellers geometrically similar, the magnitudes

$$\left.\begin{aligned} \alpha &= \frac{\Pi}{n^2 D^4} \\ \beta &= \frac{P_e}{n^3 D^5} \\ \rho &= \frac{\alpha\,\gamma}{\beta} \end{aligned}\right\} \quad \ldots\ldots\ldots\ldots \quad (5)$$

are functions of $\gamma = \frac{V}{nD}$, $\epsilon = n\,D$, that is to say, of functions of the speed of advance V and of the peripheral speed $\pi\ nD$.

If on two rectangular axes we lay off as abscissae the values of γ and as ordinates the values, either of α, of β, or of ρ, the points representing the properties of a type of propeller are distributed on curves $n\,D =$ constant in the planes (α, γ), (β, γ) and (ρ, γ).

However, for large values of V [of the order of 27 to 28 m. (88 to 92 ft.) per sec. (about 62 mi. per hour)] and of nD (of the order of 25 to 30), the curves $\epsilon = nD$, corresponding to variations of ϵ of 10 units, are sensibly the same. As these conditions are found in the values used in practice, we may take for prac-

tical purposes α, β, ρ as functions of the quantity γ. In each of the planes (α, γ), (β, γ), (ρ, γ) the properties of a given type of propeller may be represented by a single curve.

In the same way the researches carried out at the Institute of Saint-Cyr have shown that, for a wide field of values and comprising the conditions of practice, the ratios $\frac{\alpha}{\alpha_0}$ and $\frac{\beta}{\beta_0}$ are also functions of γ for a given type of propeller.

(2) The ratio $\frac{\alpha}{\alpha_0}$ decreases regularly and quite rapidly as the value of γ increases.

For a given number of revolutions of the propeller, α_0 has a determinate value.

For a given number of revolutions of the propeller, the traction decreases as the speed increases.

(3) In the experiments at Saint-Cyr, the values of $\frac{V}{nD}$ did not exceed 0.90, a value for which $\frac{\alpha}{\alpha_0}$ is not zero. Let us assume it justifiable to extrapolate the curve $(\frac{\alpha}{\alpha_0}, \gamma)$ to its intersection with the axis of γ, and below this axis. Let us further assume that α_0 has a constant value, whatever may be the revolutions of the propeller. We may then state the following proposition, which, however, is only approximate.

Above a certain value of $\frac{V}{nD}$, the propeller acts as a brake (traction negative); below this value, it acts as a propeller (traction positive).

According to this, the number of revolutions beyond which the propeller becomes propulsive is the greater as the speed V is greater. For a certain propeller of 2.40 m. (7.88 ft.) it has been found that as the value of V increases from 4 m. (13.1 ft.) per sec. to 12 m. (39.4 ft.) per sec., the number of revolutions for which the traction becomes zero passes from 300 to 566.

(4) The values of $\frac{\beta}{\beta_0}$, for a part of the propellers studied, continually decrease with increasing values of γ; for others, $\frac{\beta}{\beta_0}$ first increases slightly with γ and then decreases. In any case, the decrease of $\frac{\beta}{\beta_0}$ is less rapid than that of $\frac{\alpha}{\alpha_0}$.

In considering, as above, what develops for a given velocity of rotation of the propeller, it is seen that the traction Π decreases more rapidly than the power P_e. The latter is, in those conditions, proportional to the couple transmitted to the propeller shaft. The traction and the motor torque are then very far from being proportional.

In the experiments at Saint-Cyr, the point on the axis of γ for which $\frac{\beta}{\beta_0} = 0$ was not determined. As above, let us assume as justified the extrapolation which consists in prolonging the curve $(\frac{\beta}{\beta_0}, \gamma)$ to its intersection with the axis of γ. What has just been said shows that this point is farther removed from the origin on the axis of γ than the point of intersection of the curve $(\frac{a}{a_0}, \gamma)$ with this same axis. When the motive power is zero, the traction is negative and the propeller functions like a wind mill. It absorbs power furnished by the air, but does not transmit it to the motor; this power furnished by the air is absorbed by the resistance proper of the propeller, which turns without any manifestation of motive power on the shaft.

(5) For a given number of revolutions, the power absorbed by the propeller at a fixed point is, in general, greater than that absorbed when the propeller moves in the direction of its axis. For the same number of revolutions, it is necessary to supply at the fixed point a greater power than when the propeller advances in the direction of its axis.

For the same power absorbed by the propeller, the number of revolutions of the propeller at a fixed point is, in general, less than that when advancing in the direction of its axis.

Let us consider a propeller put into operation on an aeroplane at rest. It absorbs a certain power equal to that furnished by the motor. If the aeroplane is put into motion and if the number of revolutions of the propeller remains constant, the power absorbed by the propeller first decreases, while the power furnished by the motor tends to remain the same. In order that equality may obtain between the two powers, it is necessary that the revolutions of the propeller increase. Thus for a given opening of the throttle valve for the motor, the number of revolutions of the propeller with the aeroplane in flight is in

general greater than when at rest. This increase in the number of revolutions per minute may range from 30 or 40 to 100. For a given motor, certain propellers, giving with the aeroplane at rest a suitable number of revolutions, may in free flight give a number too far above the normal regimen to permit of using such propellers.

In any case, it may be noted that there are certain propellers which require in flight a torque greater than at rest. Instead of speeding up the motor (with fixed throttle opening) they slow it down.

Following are the results of experiments made at the Institute of Saint-Cyr.

Blériot monoplane with Gnome motor, 60 hp.

Observations taken in free flight with four Chauvière propellers under the same conditions regarding the motor.

Propeller	Diam.	Pitch	Speed of hor. flight	Revolutions per minute At rest	In flight
I.	2.45 m.	1.53 m.	26.7 m.s.	1160	1200
	8.05 ft.	5.02 ft.	87.5 f.s.		
II.	2.40 m.	1.75 m.	25.6 m.s.	1130	1090
	7.90 ft.	5.75 ft.	84.0 f.s.		
III.	2.50 m.	1.60 m.	25.25 m.s.	1160	1300
	8.20 ft.	5.25 ft.	82.8 f.s.		
IV.	2.45 m.	1.44 m.	27.5 m.s.	1180	1220
	8.05 ft.	4.72 ft.	90.0 f.s.		

For the propeller of the greatest pitch there is decrease in the rotative speed; for the other three, there is increase in this speed.

From the practical point of view, if in certain cases, the number of revolutions of the propeller in free flight is, for the same conditions at the motor, nearly the same as with the aeroplane at rest, it must not necessarily be concluded that the power of the motor is decreasing; it may well be that, with the propeller employed, it cannot be otherwise.

(6) The efficiency ρ increases, at first nearly linearly, passes through a maximum and then decreases rapidly. All propellers have then a maximum efficiency corresponding to a determinate value of $\frac{V}{nD}$, peculiar to each type of propeller. This value is nearly independent of nD, at least for the values comprised between 30 and 40 (region of actual practice).

(7) Let us consider propellers which are not geometrically similar. We may say that these propellers form a "group" if the definition of their geometrical form contains a variable parameter, with the different values of which they are designed. This parameter may be the pitch, the curvature of the blade, the variation of its width with the distance from the axis, etc. The designer, for example, passes from one propeller to another of the group by preserving the various sections of the blade but in causing the pitch to vary.

If, then, we consider the propellers of a group, differing for example only in the pitch, the maximum efficiencies and the corresponding values of $\frac{V}{nD}$ continuously increase with increase in the ratio of the pitch to the diameter.

This was shown by M. le Commandant Dorand in his experiments at Chalais-Meudon on propellers of the same blade area in which the ratio of the pitch to the diameter continuously increased from 0.65 to 1.29.

M. Eiffel has developed the same results on models of the following propellers:

First Group. Diameter 0.80 m. (31.5 in.); blades flat on working face; pitch sensibly constant for each propeller; width of blade, 1/10 diameter. At equal distances from the axis, the section of the blades is the same. The thickness decreases regularly from the hub to the tip of the blade.

Pitch of Propeller	Pitch Ratio
0.42 m. (16.5 in.)	0.53
0.64 m. (25.2 in.)	0.80
0.78 m. (30.7 in.)	0.97
1.04 m. (41.0 in.)	1.30

Second Group. Diameter 0.80 m. (31.5 in.); width of blade 1/10 diameter; blades hollow on working face. The mean line of the section has a height of segment equal to 1/12 the chord. Pitch constant for each propeller.

Pitch of Propeller	Pitch Ratio
0.42 m. (16.5 in.)	0.53 m.
0.65 m. (25.6 in.)	0.81 m.
0.82 m. (32.3 in.)	1.025 m.
1.02 m. (40.0 in.)	1.26 m.

(8) For propellers of the same pitch and the same diameter, but of varying widths of blade, the maximum efficiency passes through a maximum maximorum when the ratio between the greatest width of the blade and the diameter is approximately 1/10.

This ratio has become classical. It is found closely approximate in nearly all propellers.

(9) It is desirable to use a propeller in the vicinity of its maximum efficiency.

In fact, for values of $\frac{V}{nD}$ near the maximum efficiency, the curve (ρ, γ) is, in general, quite flat. It results that, in spite of the variations of regimen of the motor and of the speed of an aeroplane, the efficiency ρ is always near the maximum. A propeller which does not fulfil these conditions gives only mediocre results.

The practical result of the use of the propeller in the neighborhood of its maximum efficiency is an economy in fuel in horizontal flight, and the possibility of utilizing, more easily and more completely, the excess power of the motor for climbing or in traversing eddies.

Curves (ρ, γ) peaked near the maximum imply a rapid fall in efficiency in case of an acceleration of the motor. The practical consequence is that, in order to obtain a moderate increase in effective power, it is necessary to expend relatively a large amount of fuel and oil, and to risk overstraining the motor.

(10) It is desirable, in practice, in order to have a maximum efficiency high (between 0.70 and 0.80), that γ should be, for such maximum, normally near the value 1.0, or equal say to 0.90.

In this case, if $nD = 40$, the normal speed of horizontal flight will be equal to 36 meters (118 ft.) per second, or 129.6 km. (80.5 mi.) per hour.

If $n = 16.66$ r.p.s. (1000 r.p.m.), $D = 2.40$ m. (7.88 ft.). If $n = 20$ r.p.s. (1200 r.p.m.), $D = 2$ m. (6.56 ft.). If $n = 8.33$ r.p.s. (500 r.p.m.), $D = 4.8$ m. (15.16 ft.).

(11) Some writers have maintained that there is, for each type of propeller, a best value of the ratio of pitch to diameter, characteristic of this type of propeller. This is by no means

certain. But it does not appear, as has been sometimes stated, that there is a best value of this ratio for all propellers, value independent of their form.

(12) Propellers have, in general, two or four blades. Four blades should be used in the following case.

Suppose that a propeller is required capable of absorbing a very considerable power. With two blades, there may result:

(a) A propeller of too great diameter;

(b) A propeller with a speed of rotation too high.

In these two cases, centrifugal force would have a value too high. It would then be advantageous to employ a propeller with four blades, which would permit the reduction either of the diameter or of the number of revolutions, that is, to decrease the influence of centrifugal force.

It is necessary that the blades of a four-bladed propeller be designed so that the coefficients $\frac{P_e}{n^3 D^5}$ and $\frac{P_u}{n^3 D^5}$ shall be as nearly as possible equal to the sum of the values of these coefficients for two propellers of two blades each, operating each as if alone. This is a matter to be examined specially for each case. Such examination is well adapted to the method by the use of models. It is thus that M. Eiffel has shown, for certain Drzewiecki propellers, that the reduction coming from the influence of the blades in a four-bladed propeller was minimum when the axes of the blades made, between themselves, angles of 75° and 105°.

13. Study of the Medium Surrounding a Screw Propeller.

M. Eiffel has studied, by means of a fan, a certain number of models of screw propellers. He has undertaken to investigate the variation in the velocities of the current of air, both in front of and behind a propeller.

The measurements were made in a plane situated, either in front or behind the propeller, at a distance equal to 1/5 the diameter.

The velocities were determined (by means of a Pitot tube) at distances from the axis of rotation equal to 1/5, 1/3 approx., 2/5, 1/2 approx., and a little more than 1/2 the diameter of the propeller. The next to the last position is near the tip of the

blade. The last is a little outside of the cylinder circumscribing the propeller.

Values of $\gamma = \frac{V}{nD}$ are made to vary over a three-fold range by varying either V or n, but the former by preference. To these values of γ correspond values of the efficiency ρ.

(1) There is acceleration in the velocity of the current of air, whether in front of or behind the propeller.

(2) The acceleration is greater behind than in front.

(3) Acceleration increases from the hub outward to a distance from the axis between 1/3 and 2/5 the diameter; it then decreases as the tip of the blade is approached.

This decrease is more rapid behind than in front.

(4) The value of the maximum of the acceleration depends on the direction of the relative velocity γ at the tip of the blade. Let γ_m be the value of γ for which the efficiency is maximum. If we then vary from γ_m in the direction of increasing γ, the maximum value of the increase of velocity diminishes; it increases, on the contrary, if we vary from γ_m in the direction of decreasing γ.

(5) The turbulent zone extends very little beyond the cylinder whose base is the circle swept by the tips of the blades. This result shows that the ratio 1/3 adopted between the similar dimensions of a model and the full-sized propeller is sufficient to envelop the model with a surrounding cushion of quiet air sufficiently thick to permit of considering the model as moving in an indefinite mass of air.

(6) The increment of velocity between the forward and rear faces of the propeller is accompanied by a slight contraction in the size of the moving column of air.

(7) The augmentation of velocity due to the propeller has an influence on the operation of an aeroplane. The sustentation and the propulsive resistance are increased. At the same time this influence does not seem to be very important. Suppose that the blast from the propeller acts on 1/8 of the spread of the aeroplane and that the increment of velocity is 50% (a rather high value); the mean velocity of the wind meeting the wing is then increased in the ratio $\frac{7}{8} + \frac{1.50}{8} = 1.065$.

Such an increment is of no special importance.

(8) These experiments are an illustration of the hypothesis of the "preliminary dynamic condition", due to M. Soreau.

When the propulsive speed of the propeller is less than the circumferential speed of the tips of the blades, as is usually the case, the periodic and rapid movements impressed by the blades on the mass of air surrounding the propeller produce a condition of steady flow. This is characterized by the existence of a fluid vein having the same axis as the propeller which accompanies it in propulsion; this vein remains unchanged so long as the conditions of operation (V, n) remain unchanged. It is in this fluid vein in movement, independent of the position of the blades at any given instant, that the latter operate. M. Soreau gives to this fluid vein the name of "propeller vein".

At the same time, there is formed around the blade in movement a sort of fluid prow and stern, on which glide the particles of air, in such manner as to constitute a wake which accompanies the blades without, however, entraining the particles of air. To these wakes or secondary veins, produced in the line of motion of the blades, M. Soreau gives the name of "blade veins".

Taking as a point of departure this hypothesis, M. Soreau has been led to represent certain experiments of M. Eiffel by a formula of the form

$$\alpha = A - B\left[\frac{V+w}{nD}\right]^2 \quad \ldots\ldots\ldots \quad (5)$$

w, being the mean axial velocity of the "propeller vein", while A and B are constant for geometrically similar propellers.

Certain experiments of M. Eiffel are well represented by the equation

$$\alpha = 0.0196 - 0.022\left[\frac{V}{nD} + \frac{0.46}{V}\right]^2 \quad \ldots\ldots \quad (6)$$

which may be applied from the value $\frac{V}{nD} = 0.3$.

Equation (6) shows that the axial velocity w is of the form

$$w = 0.46\frac{nD}{V} \quad \ldots\ldots\ldots\ldots \quad (7)$$

In the region of maximum efficiency of the family of propellers considered, γ is comprised between 0.5 and 0.7; w is then comprised between 0.92 and 0.66 m. (3.02 and 2.16 ft.) per second. In this region the ratio $\frac{w}{V}$ is then small for values of the speed

of propulsion higher than 10 m. (32.8 ft.) per second. In this case α becomes a function of γ. Reference has been made above to this fact. The larger the value of V, the less distinct are the curves $nD = \epsilon$.

Equation (6) may be written

$$\alpha = 0.0196\left[1-\frac{0.022}{0.0196}\left(\frac{V}{nD}+\frac{0.46}{\frac{V}{nD}}+\frac{1}{nD}\right)^2\right] \quad . \quad . \quad . \quad (8)$$

This is of the form

$$\alpha = a\left[1-\left(\frac{V}{\lambda' nD}+\frac{k}{\lambda' V}\right)^2\right] \quad . \quad . \quad . \quad . \quad . \quad . \quad (9)$$

We should have in the same way

$$\beta = b\left[1-\left(\frac{V}{\lambda'' nD}+\frac{k}{\lambda'' V}\right)^2\right] \quad . \quad . \quad . \quad . \quad . \quad . \quad (10)$$

The coefficients a, b, γ', γ'', k are constant for propellers geometrically similar, so long as the ratio of similar dimensions does not exceed a certain limit. It does not appear that such relation can be admitted for a propeller and its model when the latter has dimensions too much reduced in relation to those of the propeller.

(9) The ratio 1/3 adopted by M. Eiffel for propellers of aeroplanes seems to be an upper limit. It leads to rotative speeds of the model of 2400 and 3000 revolutions per minute, figures which it seems prudent not to exceed.

When the problem is concerned with the study of the propellers of a dirigible [diameter 4.5 m. (14.75 ft.)], this ratio requires the use of models of 1.5 m. (4.9 ft.) in diameter. These models seem a little large for the cylinder of air 2 m. (6.56 ft.) in diameter employed at Auteuil by M. Eiffel. In this case it would be preferable to employ a model on the scale of 1/4 [diameter, 1.125 m. (3.69 ft.)], turning at 2000 r.p.m., corresponding to 500 r.p.m. for the propellers of the dirigible.

14. Influence on the Operation of a Propeller of a Current of Air Perpendicular to the Axis of Rotation.

If we call W the velocity of the current of air and if we consider the ratio $\frac{W}{\pi nD}$, the influence on the traction and on the power absorbed seemed to depend on this ratio.

The ratios $\frac{a}{a_0}$ and $\frac{\beta}{\beta_0}$ increase with this ratio, at first very rapidly, then more and more slowly.

These conclusions result from calculations made at the Institute of Saint-Cyr, based on experiments made on small propellers by M. Riabouchinsky, director of the Aerotechnic Institute of Koutchino.

Suppose that for a propeller of the order of size suited for aviation, the action of a wind perpendicular to the axis depends on the relation $\frac{W}{\pi nD}$ in the same proportions as for the small propeller studied by M. Riabouchinsky. We can then estimate the traction which would be realized by a helicopter with vertical axis carried by an aeroplane in flight.

Suppose a propeller 2.5 m. (8.2 ft.) diameter with vertical axis turning at 1200 r.p.m. and carried by an aeroplane with a horizontal velocity of 25 m. (82 ft.) per second. The peripheral speed of the propeller is equal to 157 m. (515 ft.) per second and the ratio $\frac{W}{\pi nD}$ has a value 0.16. Referring to the calculations of M. Maurain, director of the Institute of Saint-Cyr, it is seen that the traction of this helicopter would be increased by about 1/3 of its value as a result of the relative current of air due to the movement of the aeroplane; but the power to be supplied would itself be increased by about 1/4.

It would be interesting to apply such conclusions to the results of experiments on propellers larger than those studied by M. Riabouchinsky.

CONCLUSION.

Aerodynamic Studies in France During the Last Ten Years.

Ten years ago there was only one laboratory in France in which researches on the resistance of air were carried on in a systematic manner. This was the laboratory installed at Chalais-Meudon by Colonel Ch. Renard. An engineer of great talent and, at the same time, a remarkable scholar, our fellow countryman must be considered as one of the founders of experimental aerodynamics. His studies on the resistance of air upon bodies of different forms and his experiments upon supporting screw propellers have become classic.

Other experimenters had, to be sure, undertaken at this very time interesting researches upon the resistance of the air. We may cite the studies of Marey upon the flight of birds; the experiments with disks in free flight made by the Abbé Le Dantec at the Conservatoire des Arts et Métiers; those of Cailletet and Colardeau upon orthogonal disks thrown from the second story of the Eiffel Tower. Certain engineers, Ricour, Desdouits, Le Grain, Nadal, had taken up the study of the effects of air resistance upon bodies moving at a high rate of speed. But all these tests carried out under unlike conditions were not susceptible of affording a serious basis for studies in aerodynamics and did not furnish engineers with information which was adequate for the carrying through of their designs.

At this epoch they were still teaching in certain engineering schools, regarding the resistance of air upon planes inclined to the direction of the wind, the law of the square of the sine of the angle of incidence, although it had long since been demonstrated that this law, applied to the flight of birds, led to absurd conclusions.

The résumé which we have just made shows the progress which has been accomplished during the past ten years.

There exist today four great laboratories which are chiefly devoted to the study of aerodynamics.

The military laboratory of Chalais-Meudon, under the learned direction of M. le Commandant Dorand, continues the fine traditions of Colonel Renard. It is there that the complicated problem of screw propellers is beginning to be cleared up; it is there that important researches upon the gliding flight of avions, and upon the coefficient of safety which should be adopted in the construction of these machines, have been taken up.

M. de Guiche has devoted himself specially to the delicate problem of the distribution of pressure on the wings of aeroplanes. He has subjected the actions exercised by the air on the surfaces of aerofoils to a minute and precise analysis; he has created a sort of topography of these surfaces which is of the greatest importance for the determination of the laws of aerodynamics.

The constructors of aeroplanes find effective aid in the laboratories of M. Eiffel, at Auteuil, so remarkably well supplied with equipment, and also at the Aerotechnic Institute of Saint-Cyr.

The experiments of M. Eiffel on models have been carried out with the constant purpose of furnishing constructors with coefficients which are reliable. After studying aerofoils, this eminent engineer has devoted his efforts to a precise determination of the influences which these exert upon each other when they are assembled to form actual flying machines. He has determined the relative coefficients for various parts of the avions, the cables and tension wires, the wheels of the landing frames, the fuselage. He has, finally, for the whole apparatus, studied the different conditions of flight.

The question of screw propellers is beginning to be well understood. We know, in particular, what the conditions are under which a model must be tried out in order to give information applicable to a propeller of normal size. The logarithmic diagram proposed by M. Eiffel facilitates the choice of a propeller which will suit a machine of given character.

Parallel with the studies of M. Eiffel on models, the Aerotechnic Institute of Saint-Cyr, under the energetic direction of its director, M. Maurain, and of its sub-director, M. Toussaint, makes use of its elaborate equipment to study avions or parts of avions in normal size. This laboratory, at the present moment the most important in the world, puts at the disposal of inventors numerous pieces of apparatus for measurements which enable them to determine *a priori* the qualities of the machines which they have under design. In collaboration with military aviation pilots, M. Toussaint has been able to install on the avions ingenious registering devices which make it possible to determine, during a flight, the effects of the air on the different parts and the pilot's manoeuvres.

This ensemble of researches, executed by the different French laboratories, researches which complement each other, have already led to the series of results of which we have given an idea in Chapter IV of this report. These experimental results derive their importance from this fact, viz., that they have been obtained by means of a large number of careful

experiments susceptible of giving them a high degree of reliability.

Aviation has, moreover, derived a great benefit from these laboratory experiments. I will cite here only one confirmatory example. In spite of certain ideas put forward by M. Rateau in regard to screw propellers, the constructors of aeroplanes made little of the influence of the back of the wings on the value of the supporting force; they believed that the whole effect came from the air pressure upon the face directly exposed to the wind. But certain researches carried out at the laboratory of M. Eiffel on the distribution of air effects on the two surfaces of an aerofoil showed that there were negative pressures on the back and that these were much more important than the pressures on the surface directly exposed to the wind. Wherefore, contrary to the mode of construction in practice, the necessity arose of fixing solidly the canvas on the back of the wing in order to avoid accident.

The study of the conditions of flight for aeroplanes by means of registering instruments standardized in the laboratories has, as M. Toussaint has shown, a great importance from the point of view of safety. It is of prime importance to put within the hands of pilots instruments capable of controlling the quality of their evolutions. This is of special importance for the pupil; it is no less so for the experienced pilot. Statistics, in fact, show that a goodly number of accidents are to be imputed to mistakes in piloting. Such false manoeuvres are often unconscious and result from the ignorance of the pilot as to the limits of safety in which he can manoeuvre his avion. By means of appropriate instruments these limits can be determined for each type of machine and even for each machine, on the aviation fields, by experienced pilots. The role of the aerodynamic laboratories is to combine such registering apparatus so as to simplify the installation on board the machines, and to standardize these instruments. The Institute of Saint-Cyr has commenced to do this work with success.

Our aerodynamic laboratories are concerned, then, not only with the solving of problems which are a part of the science of aerodynamics, but they strive also to come to the assistance of our constructors, and they have their share in the evolution

of a weapon which is just now rendering such great services in the war where the destiny of the country which saw its birth is at stake.

BIBLIOGRAPHY.

Cailletet et Colardeau, Comptes Rendus de l'Académie des Sciences, p. 115, 1892.

Desdouits, Annales des Points et Chaussées, 1886, 1.

Dorand, Etude expérimentale des hélices propulsives à l'aide de l'aéroplane volant (La Technique Aéronautique, n° 45, 1 novembre, 1911).

Dorand, Etude expérimentale des hélices propulsives (La Technique aéronautique, 1er Semestre, 1910, p. 433).

Eiffel, Recherches expérimentales sur la résistance de l'air executeés à la tour Eiffel. (Paris, Imprimerie L. Maretheux, 1907).

Eiffel, La Résistance de l'Air et l'Aviation. Expériences executécs au laboratoire du Champ de Mars. (Paris, H. Dunod et E. Pinat, 1911).

Eiffel, La Résistance de l'Air et l'Aviation. Expériences executées au laboratoire d'Auteuil. (Paris, H. Dunod et E. Pinat, 1914).

de Grammont de Guiche, Essais d'aérodynamique du plan, 1ère Série (Paris, Hachette, 1911).

de Grammont de Guiche, Essais d'aérodynamique, 2e Série (Paris, Hachette, 1912).

de Grammont de Guiche, Essais d'aérodynamique, 3e Série (Paris, Hachette, 1913).

de Grammont de Guiche, Essais d'aérodynamique, 4e Série (Paris, Gauthiers-Villars, 1914).

Institut Aerotechnique de Saint-Cyr, Fascicules I à IV Part I, Descriptive notice published on the occasion of the inauguration, July 6, 1911. Part II, Studies on the resistance of the air on surfaces; studies on the wind; studies on fabrics for aeroplanes, 1912.
Part III, Studies on propellers and on aerofoils; measurements on aeroplanes in free flight; aerodynamic studies by means of fan; variations in the wind; coefficient of safety for an aerofoil, 1913.
Part IV, Experiments on a Blériot in free flight, 1914 (Paris, H. Dunod et E. Pinat).

Jouguet, La Résistance de l'air et les expériences sur les modèles réduits. (Revue de Mécanique, Jan. 1913).

Lafay, Appareil permettant la détermination directe du taux de sustentation d'un modèle d'aéroplane; application à des oiseaux naturalisés. (La Technique Moderne, 3e Année, t. III, n° 12, décembre 1911).

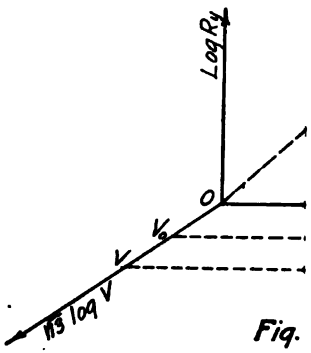

Fig.

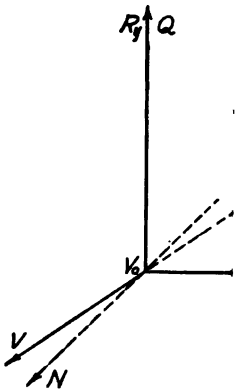

Lafay, Effet exercé sur une aile par un vent rapidement variable. (La Technique Moderne, 6e Année, 1er Semestre, n° 9, 1er mai, 1914).

Le Dantec, Bulletin de la Société d'Encouragement pour l'Industrie nationale, t. IV, 5e Série, 1899.

Marchis, Cours d'aéronautique de la Faculté des Sciences de Paris, 1ère Partie, 1910; 2e Partie, 1911; 3e Partie, 1912. (Paris, H. Dunod et E. Pinat).

Marey, Le vol des oiseaux (Paris, Masson, 1890).

Olive, Les mesures aérodynamiques sur les aéroplanes de dimensions normales. (Le Génie Civil, t. 59, n° 6, 10 juin, 1911).

Raibaud, Technique de l'aéroplane. (Paris, O. Doin, 1911).

Rateau, Appareil et expériences d'aérodynamique de 1909 (Bulletin de la Société des Ingénieurs Civils de France, 5 juillet, 1912).

Ricour, Annales des Ponts et Chaussées, 1885, 2.

Soreau, L'hélice propulsive (Memoires de la Société des Ingénieurs Civils de France, septembre, 1911).

Soreau, Bulletin de la Société des Ingénieurs Civils de France, juillet, 1912. (There will be found in this paper references to various other papers by the same author).

Toussaint, Les études aérodynamiques realiseés à l'Institut aérotechnique de l'Université de Paris. (Bulletin technologique de la Société des Anciens Elèves des Ecoles Nationales d'Arts et Métiers. n° 3. mars, 1914).

Note:—The works of Col. Ch. Renard have been published in the Comptes Rendus de l'Académie des Sciences, in the Revue du Génie Militaire, and in the Revue de l'Aéronautique. References will be found in le Cours d'Aéronautique de la Faculté des Sciences de Paris (L. Marchis), 1ère Partie.

Paper No. 226

A REVIEW OF HYDRODYNAMICAL THEORY AS APPLIED TO EXPERIMENTAL AERODYNAMICS.

By

J. C. HUNSAKER
Assistant Naval Constructor, U. S. Navy
Instructor in Aeronautics, Massachusetts Institute of Technology
Boston, Mass., U. S. A.

For centuries, the mechanics of fluid motion has baffled the understanding, and even today in an age called scientific, presents a comparatively unexplored field for research. The mechanics of rigid bodies, heat, light, sound, electricity and magnetism we flatter ourselves that we are now able to explain as well as apply. But the everyday phenomena of fluid motion seem to be of almost hopeless complexity. The flight of birds, screw propellers, eddies and whirlpools in the wind or in rivers, we observe, perhaps turn to our advantage, but only vaguely comprehend.

Nevertheless, the mathematicians have been able greatly to simplify a few special problems by considering the motion of an unreal perfect fluid subject to various restrictions. In this way, they have given us a first approximation to the motion of real fluids under somewhat similar conditions, and to this extent, have furnished a qualitative explanation of observed phenomena.

Engineers in the design of hydraulic works, ships, aircraft, propellers, etc., largely depend on purely empirical formulae and coefficients. Their art is to apply this accumulated information to specific problems, but the successful completion of such engineering projects unfortunately does not reveal the true nature of the fluid motion involved.

However, it is to some degree possible to interpret and coordinate the facts of experience in the light of the conceptions of theoretical hydrodynamics. Especially in aeronautics have ex-

periments been given theoretical interpretation; perhaps largely because research has been prosecuted by men familiar with mathematical theory. There exists, consequently, a very useful, though incomplete, approach of theory to experience by which experimental research may be guided and its results generalized.

In view of recent progress in the application of experimental aerodynamics to aeronautics, opportunity is taken in this paper to present a brief review of the more important conclusions to be drawn from hydrodynamical theory and to illustrate them by physical examples.

The extent of the literature of fluid motion, from the time of Newton to the present day, is commensurate with the difficulty and technical importance of the subject. No attempt has been made here to compile a bibliography and only the more important references are given. It is hoped, in presenting a general survey, that the border line between theory and practice will be indicated and that the attempt to interpret experimental phenomena will be shown to be not unreasonable.

Grateful acknowledgement must be made for the very helpful criticism of Mr. L. V. King.* At his suggestion the sections dealing with discontinuity and vortex motion have been materially revised, with improvement both to clearness and precision of statement.

PERFECT FLUID.

Mathematicians, in order to develop a theory of fluid motion giving equations that can be integrated, have defined a perfect liquid as one that is both incompressible and incapable of sustaining tangential stress or shear. The liquid is non-viscous and, in consequence, pressure at any point is equal in all directions, whether the liquid be in motion or at rest. Furthermore, small elements of the liquid can not be set in rotation. Motion usually takes place under the influence of gravity as a result of the action of external forces, such as the motion of a solid body through the liquid. Such fluid motion is irrotational. An infinite ocean of fluid is assumed, or it is assumed that the fluid completely fills a tank with rigid walls. The pressure at a great distance from the moving object is usually denoted by Π. If Π be

*Asst. Professor of Physics, McGill University.

made, by hypothesis, sufficiently great, the solid body moved by an external agent can only divide or push aside fluid, which will close in behind it. The fluid already occupies the maximum space and there can be no voids in it. Π is usually chosen, therefore, so that the flow is continuous. A solid body immersed in the fluid is subject to finite pressures, but by a familiar law of hydrostatics the resultant force on the body is zero. When the body moves with uniform velocity, if the fluid motion be continuous, the resultant force on the body continues to be zero. Under these conditions then a solid body moves without resistance in a perfect fluid. If the motion of the body be accelerating, a resistance to motion is felt as a virtual increase in mass or inertia due to building up the energy system in the fluid. Motion through a perfect fluid is without resistance because no mechanism exists by which energy may be dissipated. It is assumed that the fluid is of such extent or so contained that no surface waves may carry energy.

Steady Flow.

If we restrict the motion of the solid body to one of pure translation, the velocity at any point in the fluid, fixed with reference to the body and moving with it, remains constant with time, both in magnitude and direction. This is defined as "Steady Motion". Velocity relative to the solid body only is here considered. Hence it is immaterial whether the body move through the fluid or the fluid flow past the body.

Stream Line.

The path relative to the body of a single particle of fluid in steady flow is called a "Stream Line". In steady motion the stream lines or tracks of particles flowing past the body are the same at any instant of time.

The above restrictions on the fluid motion usually considered may be expressed algebraically as follows:

(1) The fluid is incompressible; $\frac{D\rho}{Dt} = 0$,

when ρ is density, and $\frac{D}{Dt}$ indicates differentiation following the motion of the fluid (mobile operator).

(2) The fluid is frictionless; $\mu = 0$ when μ is the coefficient of viscosity.

(3) The fluid is continuous;

$$\frac{\partial u}{\partial x}+\frac{\partial v}{\partial y}+\frac{\partial w}{\partial z}=0$$

when u, v, w, are the velocities along rectangular axes x, y, z, taken at any point fixed with reference to the body, and moving with it.

(4) The fluid motion is steady,

$$\frac{du}{dt}=0,\ \frac{dv}{dt}=0,\ \frac{dw}{dt}=0\,.$$

(5) The fluid motion is irrotational,

$$p=\tfrac{1}{2}\left(\frac{\partial w}{\partial y}-\frac{\partial v}{\partial z}\right)=0\,,$$

$$q=\tfrac{1}{2}\left(\frac{\partial u}{\partial z}-\frac{\partial w}{\partial x}\right)=0\,,$$

$$r=\tfrac{1}{2}\left(\frac{\partial v}{\partial x}-\frac{\partial u}{\partial y}\right)=0\,.$$

These relations only hold when ϕ is a function such that

$$u=-\frac{\partial\phi}{\partial x}\,,\ v=-\frac{\partial\phi}{\partial y}\,,\ w=-\frac{\partial\phi}{\partial z}\,.$$

The function ϕ is defined as the Velocity Potential. The velocity V along any line s is $V=-\frac{\partial\phi}{\partial s}$. If s is the stream line through the point, there is no velocity except along s.

An equipotential surface connects all points of the same velocity V. This surface has no velocity along it and hence the motion of the fluid must be along the normal at every point. The equipotential surface is perpendicular to the stream lines.

Since stream lines proceed from places where ϕ is greater to places where it is less, stream lines cannot form closed curves. They must begin and end on a boundary surface, at which points the velocity is zero. A modification of this statement will be made later in connection with cyclic motion.

The existence of a velocity potential which is continuous and single valued characterizes irrotational motion of a fluid in a simply connected region.

Pressure Equation.

Consider a cylindrical element of fluid of length ds, and cross section area dS.

The pressure difference between the ends is:

$$dP=p\,dS-\left(p+\frac{\partial p}{\partial s}\,ds\right)dS=-\frac{\partial p}{\partial s}\,ds\,dS\,.$$

The mass is:

$$dm = \rho ds dS.$$

Since the acceleration is:

$$\frac{dV}{dt}, \quad dP = dm \frac{dV}{dt}.$$

Hence:

$$-\frac{\partial p}{\partial s} ds dS = \rho ds dS \frac{dV}{dt}$$

or:

$$\frac{dV}{dt} = -\frac{1}{\rho} \frac{\partial p}{\partial s}$$

But:

$$\frac{dV}{dt} = \frac{\partial V}{\partial s} \frac{ds}{dt} = \frac{\partial V}{\partial s} V = \frac{\partial}{\partial s} \left(\frac{V^2}{2} \right).$$

Integrate along the stream line s.

$$\frac{V^2}{2} + \frac{p}{\rho} = \text{a constant.}$$

This is Bernoulli's equation for irrotational motion, which states that the sum of velocity and pressure heads is constant along any stream line. The sum of these heads is not constant from one stream line to another unless these lines begin and end at the same boundary.

Bernoulli's equation is of immense use in hydraulics and is applied in aeronautics for the measurement of velocity by the Pitot Tube and Venturi Tube.

Theory of Pitot Tube.

If we have a steady parallel flow of air, that is, a current whose magnitude and direction are the same at all points of a section, we may assume that the motion is steady, continuous and irrotational. Further, if the velocity is less than 100 miles per hour, the pressure against an obstacle is small with reference to the barometric pressure. The air may be treated as incompressible. Also, if the flow is parallel there is no sliding of the particles of air past one another, and viscosity may be neglected.

In Bernoulli's equation, if p = pressure at a point in the moving stream and p_o = pressure at a point where the velocity is zero in the same or an adjacent stream line at the same elevation,

$$\frac{\rho V^2}{2} + p = p_o,$$

ρ = pounds per cubic foot, V = feet per second, p = poundals per square foot.

If an open-ended tube is pointed into the wind it will bring

one stream line to rest and transmit to a manometer at a distance a pressure p_o.

A smooth tube with closed and rounded end may have fine holes drilled in the cylindrical portion well back from the end. This tube if pointed into the wind will not greatly disturb the stream lines, which will flow along its sides with undiminished velocity. The tube will then transmit to a manometer, via the small holes, a pressure p which is the static pressure of the moving air. But

$$p_o - p = \frac{\rho V^2}{2},$$

from which the velocity may be calculated.

It is to be emphasized that the Pitot tube method of measurement is valid only for steady parallel flow at velocities which do not approach the velocity of sound in air. Only under such conditions can Bernoulli's equation be considered to hold to a fair approximation. The use of a Pitot tube to measure the discharge from a fan is of doubtful value. The flow is turbulent, not steady, and it is unlikely that the correct static pressure will be transmitted by the side holes.

In practice a double form of Pitot tube is customarily employed, constructed of two concentric tubes. The inner is open ended. The outer has its end closed and transmits the static pressure of the stream through a number of small holes. The two tubes are connected to the two branches of a manometer, and the difference,

$$p_o - p = \frac{\rho V^2}{2},$$

is read directly.

Recent experiments with such tubes indicate that the following conclusions may be safely drawn:

(1) The open-end tube correctly transmits p_o regardless of size or shape.

(2) The nose of the combination tube must be of easy form in order not to disturb the flow of air past the static openings.

(3) The static openings should be clean holes from 0.01 to 0.04 inches in diameter.

(4) Static openings should be well back from the nose of the instrument on a polished cylindrical portion of tube.

(5) Static openings may be from 4 to 24 in number arranged in any arbitrary manner.

(6) The tube should be pointed into the wind, but an error of two degrees in alignment will cause less than 1 percent error in velocity measurement.

The most important contribution to our knowledge of the Pitot tube has been recently made by Bramwell.*

A double Pitot tube of the form shown on Fig. 1 was moved through still air on the end of a whirling arm of large radius. The tests were made in a large room and a very careful estimate was made of the swirl set up by the rotation of the arm. The

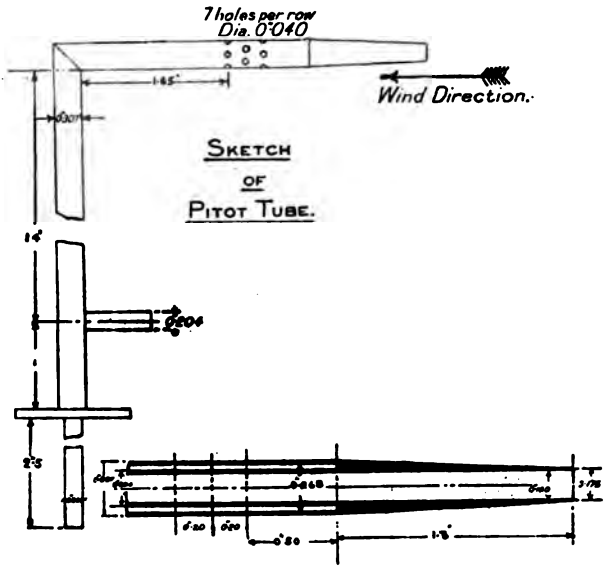

Fig. 1. National Physical Laboratory Standard Pitot Tube.

true air speed was taken to be the difference between the velocity of the tube as given by a chronograph and the swirl or wake current as given by anemometers set up in the room.

The experiments included velocities as high as 3000 feet per minute. The conclusion is that this form of tube correctly transmits the static pressure, which for motion through still air is equal to the barometric pressure. The open-end tube correctly

* Technical Report of the Advisory Committee for Aeronautics, 1912-13, Report No. 71.

transmits the "dynamic" pressure p_o. The order of precision is one tenth of one percent.

The effect of compressibility was investigated and found to be negligible.

The use of the Pitot tube of course requires an independent measurement of the density of the air. In aeronautics, the resistance to motion of solid bodies also depends on the density of the air to a fair approximation. Hence a standard density may be assumed and both resistance and velocity observations referred to air of this density.*

Anemometers of the Robinson cup type and vane type are employed extensively in meteorology. The reading of such an instrument depends upon apparatus friction, which is not quite constant for all wind speeds. If the mass of the rotating parts were zero, the angular velocity of the cups or vanes should be directly proportional to the wind velocity and independent of density. For zero mass, the true mean of a fluctuating wind would be recorded. When the inertia of the moving parts is high the reading should approach the "root mean square." In practice a value intermediate between these limits is recorded. An anemometer of whirling type must be calibrated against a standard at a series of speeds.

In a fluctuating wind, a Pitot tube, Venturi meter, pressure plate or other instrument whose readings vary approximately with the density and velocity squared should record very nearly a root mean square value. Since the resistance of a body to motion through air is approximately proportional to density and velocity squared, the force-producing effect of the wind is measured by these types of instrument.†

* References to the Pitot tube, besides Bramwell's paper, are the following:

D. W. Taylor, Trans. Soc. Naval Architects and Marine Engr's, 1905,
A. F. Zahm, Physical Review, Dec. 1903,
A. F. Zahm, Journal of the Franklin Institute, July 1913,
Horace Darwin, Engineering, May 23, 1913,
L. Prandtl, Handwörterbuch der Naturwissenschaft, Vol. IV, 1913.

† References to Cup and Vane anemometers.

Robinson, Irish Transactions, 1850,
Robinson, Phil. Transactions, 1880,
Greenwich Observations, 1862,

Venturi Tube.

Bernoulli's equation may be applied as a first approximation to a double trumpet commonly called a Venturi tube. Thus if frictional and eddy-making losses be neglected, the form of the exit cone is immaterial. If the entrance trumpet or cone have its broad end, of area S, pointed into a wind of velocity V, the velocity through the throat, of area S_o, has a velocity V_1 given by

$$V_1 = \frac{VS}{S_o}.$$

The pressure of the atmosphere is p_2, and hence by Bernoulli's equation the pressure at the throat of the Venturi tube is p_1, given by

$$\frac{\rho V_1^2}{2} + p_1 = \frac{\rho V^2}{2} + p_2 = \frac{\rho V^2}{2}\frac{S^2}{S_o^2} + p_1,$$

or

$$p_2 - p_1 = \frac{\rho V^2}{2}\left(\frac{S^2}{S_o^2} - 1\right).$$

If the pressure at the throat be balanced against the barometric pressure by means of an ordinary manometer, the pressure difference $p_2 - p_1$, will be measured, from which V may be calculated.

By the Pitot tube, the pressure difference measured would be

$$p_o - p_2 = \frac{\rho V^2}{2}.$$

This is a smaller pressure difference to measure than that given by the Venturi tube, and hence requires a more delicate manometer.

Thus if

$$\frac{S}{S_o} = 4, \quad \frac{S^2}{S_o^2} - 1 = 15,$$

and the head to be observed for 45.4 miles per hour is one inch of water for the Pitot tube and about 15 inches for such a Venturi tube.

Due to eddy and frictional losses, the Venturi tube cannot be used in general without calibration against some other standard such as a Pitot tube or hot-wire anemometer. The cali-

Stokes, Proceedings of the Royal Society, 1881,

Dines, Meteorological Society, 1889,

Jones and Booth, "The Measurement of Wind Velocity", Aeronautical Journal, July 1913,

Bigelow, Publications of the Argentine Meteorological office, 1913.

bration curves for a great number of Venturi tubes of various forms have been undertaken by Toussaint and Lepere.* They reached the following conclusions:

(1) The length and angle of entrance cone are not important.

(2) Entrance-cone angle may be about 20 degrees.

(3) Length of throat should be as short as practicable, about 10 percent of the throat diameter.

(4) Exit cone should have an angle of about 7 degrees, with exit area equal to entrance area of entrance cone.

(5) Placing a small Venturi tube in the throat of a large one, more than doubles the pressure difference transmitted by either alone.

(6) A very small Venturi tube gives a lower pressure difference than a large one of similar shape.

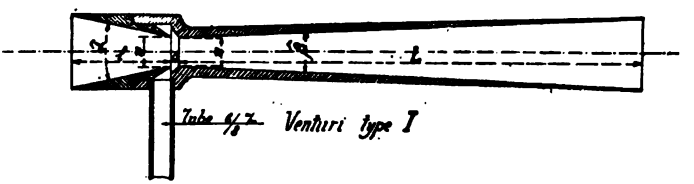

Fig. 2. Venturi Tube.

Figure 2 shows an approved type of Venturi tube used for air velocity measurement.

Hot-wire Anemometer.

Electrical measurement of wind velocity may be made by observing the rate of convection of heat from a fine wire heated by a current of electricity. It is found that the rate of convection of heat, for a wire maintained at a moderate temperature above that of the air, is very nearly proportional to the square root of the wind velocity, and to the square root of the density. This method of measurement is precise at low velocities. Also a fine wire need not disturb the flow, so that such a hot-wire anemometer is especially suitable for the exploration of the motion in the vicinity of an obstruction.

The hot-wire anemometer requires calibration on a whirling arm or other device. In an improved type, used by King, the

* Bulletin de l'Institut Aérotechnique de l'Université de Paris, 1913.

corrections usually necessary for room temperature, humidity, and density are unimportant but may be compensated if necessary. The hot-wire anemometer really measures the product of mass times velocity, "mass flow", which in many cases is exactly what is desired.

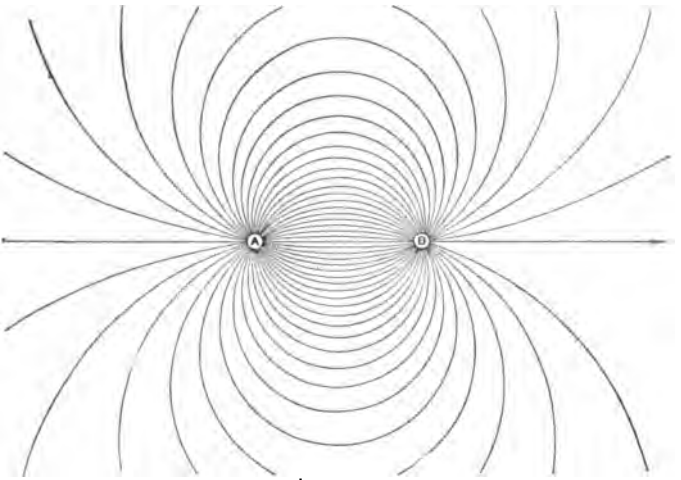

Fig. 3. A Source and a Sink.

Source and Sink.

A simple source or sink is a mathematical conception of a point where fluid is continuously created or annihilated. From an isolated source, fluid flows radially in all directions. A negative source is called a sink. If the total flux or flow per second is $\pm 4\pi m$, then $\pm m$ is the strength of the source. The velocity

References to the Hot-Wire Anemometer.

A. E. Kennelly, Trans. A. I. E. E., p. 323, June 1909.
A. E. Kennelly, Proc. Am. Phil. Soc., p. 55, April 24, 1914.
U. Bordoni, Nuovo Cimento, p. 241, April 1912.
J. T. Morris, Engineering, London, Dec. 27, 1913.
H. Gerdien, Ber. der Deutschen Pys. Ges., Sept. 20, 1913.
C. Retschy, Der Motorwagen, March 1912.
Alex. Russell, Phil. Mag., Oct. 1910.
Boussinesq, Comptes Rendus, 1901.
L. V. King, Phil. Mag., April 1915.
L. V. King, Phil. Trans. Roy. Soc., Vol. 214, May 1914.

potential at any point a distance r from the source, in a fluid at rest at infinity, is $\phi = \frac{m}{r}$ and the radial velocity at that point is

$$V = -\frac{\partial \phi}{\partial r} = \frac{m}{r^2}.$$

If there be a number of sources and sinks in the fluid, the velocity potential at any point is

$$\phi = \frac{m}{r} + \frac{m'}{r'} + \frac{m''}{r''} + \text{etc.},$$

and the velocity at that point is the resultant of the velocities due to the sources and sinks considered separately.

A double source is a source and a sink separated an infinitesimal distance δs, but each of very great strength $\pm m$ such that the product $m\delta s$ is finite.

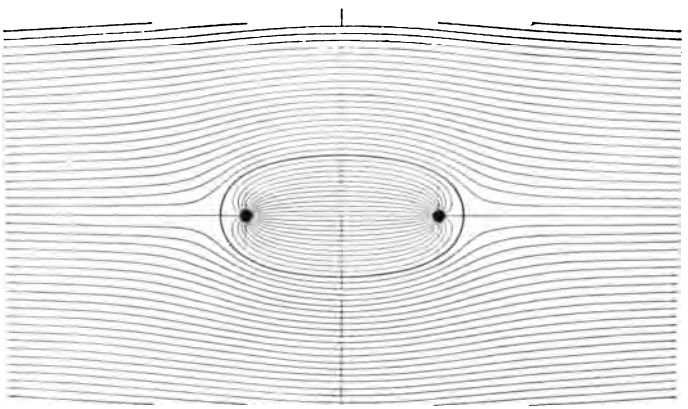

Fig. 4. Source and Sink in a Uniform Flow.

It can be proved* that continuous acyclic irrotational motion may be regarded as due to a certain distribution of simple and double sources over a line, surface or volume.

In Figure 3 the stream lines resulting from a source and a sink are shown as arcs of circles passing through the source-sink points.

If the source-sink flow be combined with a uniform motion of translation, we represent a source-sink combination held fixed in a uniform stream. The resultant lines of flow are shown in Fig. 4. It is seen that the general flow separates and leaves an

* Lamb, Hydrodynamics, p. 65.

oval-shaped figure enclosing the source and sink. The shape of this oval will vary for different arrangements of sources and sinks.

Rankine† and later Taylor‡ have made use of this property to obtain mathematical water-lines for ships.

Stream Lines and Lines of Force. A torpedo as it advances through still water pushes or deflects the particles of water near it and these particles in turn force more remote particles to move slightly to make way for them. In fact the nose of the torpedo affects the water in a similar manner to some

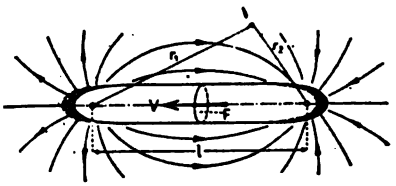

Fig. 5. Source at Bow; Sink at Stern.

arbitrary arrangement of sources. Likewise the tail may be represented by an arrangement of sinks at that place. The tail advances and water is forced by the general hydrostatic pressure to close in after it. The disturbance in the water caused by the passing of a torpedo is, except for the effect of friction, theoretically the same as that caused by the passing of some given combination of sources and sinks.

Figures 5 and 6 (after Prandtl) illustrate what has been said.

Fig. 5 represents a body of elongated form advancing through a fluid with velocity V as shown. It is assumed that the pressure due to immersion is so great that the fluid closes in behind the body. At any instant of time, the particles of water are moving along the lines of the source-sink system illustrated. If S is the cross section of the body, the source at the bow and sink at the stern should be of strength $m = \frac{SV}{4\pi}$. The velocity potential at any point is

$$\phi = m\left(\frac{1}{r_2} - \frac{1}{r_1}\right).$$

† W. J. M. Rankine, "On Plane Water Lines", Phil. Trans. 1864.

‡ D. W. Taylor, Trans. Inst. Naval Architects, 1895, D. W. Taylor, Trans. Inst. Naval Architects, 1894.

The lines of the source-sink system are often called paths or orbits because they represent at some instant of time the actual direction of motion of the particles of fluid in space. However, there is no steady flow along these lines, since, as the body passes, the particles of fluid which at first were near the source, later are influenced by the sink and ultimately come to rest after going through a small orbit. The case is illustrated by a floating log

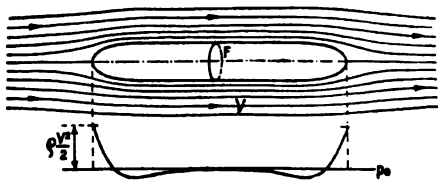

Fig. 6. Stream Lines by Composition.

near a passing steamer. The log moves out perhaps a foot or two as the steamer approaches and swings in after she passes.

To an observer on the ship, the log seems to pass sternward with a high velocity. In reality, the observer on the ship compounds his own velocity with that due to the log in space. He adds a velocity potential $\phi_1 = Vx$ due to his velocity V in the direction x. Relative to the moving ship the velocity potential is

$$\phi_2 = m\left(\frac{1}{r_2} - \frac{1}{r_1}\right) + Vx.$$

The flow due to the compounded potentials is shown in Fig. 6 (also after Prandtl). Here we have true "stream lines" which are steady lines of flux which are the same at all times. These are stream lines with reference to the moving body, and as we speak of stream line motion as steady, it is best to restrict the term to such lines. Relative to the fluid, we should have instantaneously the lines of the source-sink system of Fig. 5. The latter have been called by Ahlborn "Kraft linien", or lines of force, from analogy to a magnetic field of force.

Fig. 6 also shows the pressure at each point along a meridian of the moving body. The stream lines closest to the body transmit their pressure to the body. Since the velocity along the stream line varies, the pressure varies according to Bernoulli's equation. At the nose, one stream line is brought to rest at a "staupunkt". Here the pressure is a maximum and equal to

$p_o = p - \frac{\rho V^2}{2}$. At the bows and buttocks the velocity is higher than in the unchecked stream and hence the pressure is less. It is shown negative in the plot. Since the curve of pressures is symmetrical, there is no resistance to motion. We have assumed the fluid frictionless.

Experimental Stream Lines and Lines of Force. Figures 7 and 8 are photographs of a dirigible model moving slowly through a tank of water in which fine particles of boiled sawdust were in suspension. A beam of light made the particles of sawdust luminous. The carriage running on rails above the tank carried the model on a projecting spindle. One camera was attached to the carriage and hence moved with the model. A second camera was mounted on the side of the tunnel and had no motion. The two cameras were snapped simultaneously. Fig. 7 was taken by the camera fixed in space and shows the "lines of force". Fig. 8 was taken by the camera moving with the model and shows the "stream lines."

The lines of force should be viewed through a stereoscope in order to see clearly the lines in three dimensions.

These photographs were made by Dr. Fr. Ahlborn of Hamburg and were presented by him to the writer. It is believed that they are unique in showing the lines of force, about which there has been considerable controversy. When it is urged that the form of fluid motion is not the same when a body is moved through fluid at rest as when it is held fixed in a current of fluid, Ahlborn shows that the confusion is merely one of relative motion.*

The only stream lines we are concerned with are those producing pressures and forces on the body. These are the stream lines relative to the body which are the same in either case.

Filament Lines.† Stream lines and lines of force, which indicate direction of velocity, are made visible experimentally by the presence of foreign substances in the fluid. The motion of these substances indicates the motion of the fluid. However, if we had a floating shred of condensed milk in water, or a wisp of

* See Lamb, Hydrodynamics, p. 87.

† C. E. Eden, Report No. 58, March 1912. Technical Report of the Advisory Committee for Aeronautics, London, 1911-12.

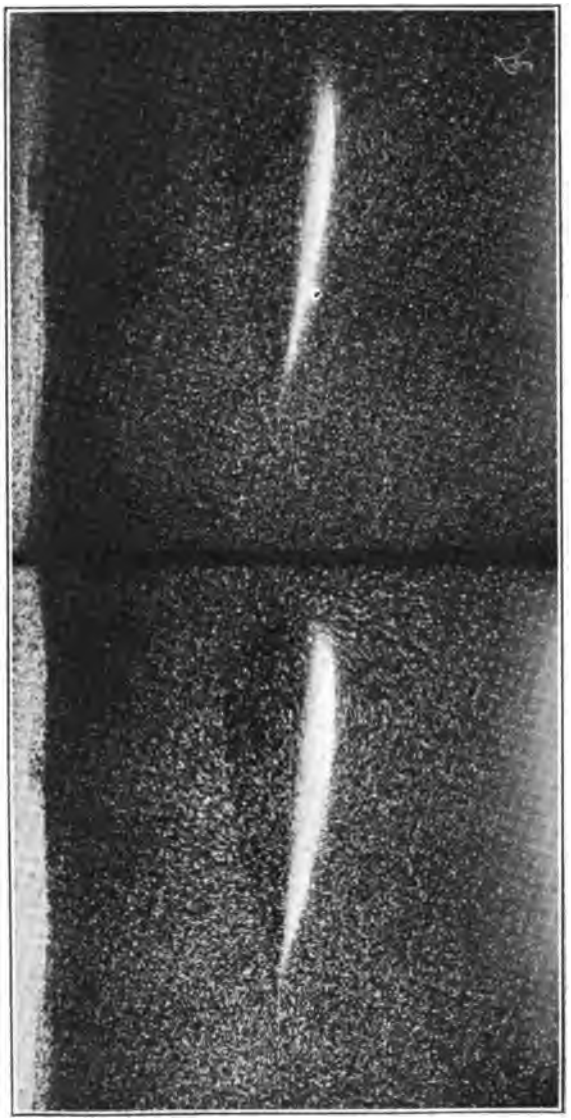

Fig. 7. Lines of Force, Fixed Camera (After Ahlborn).

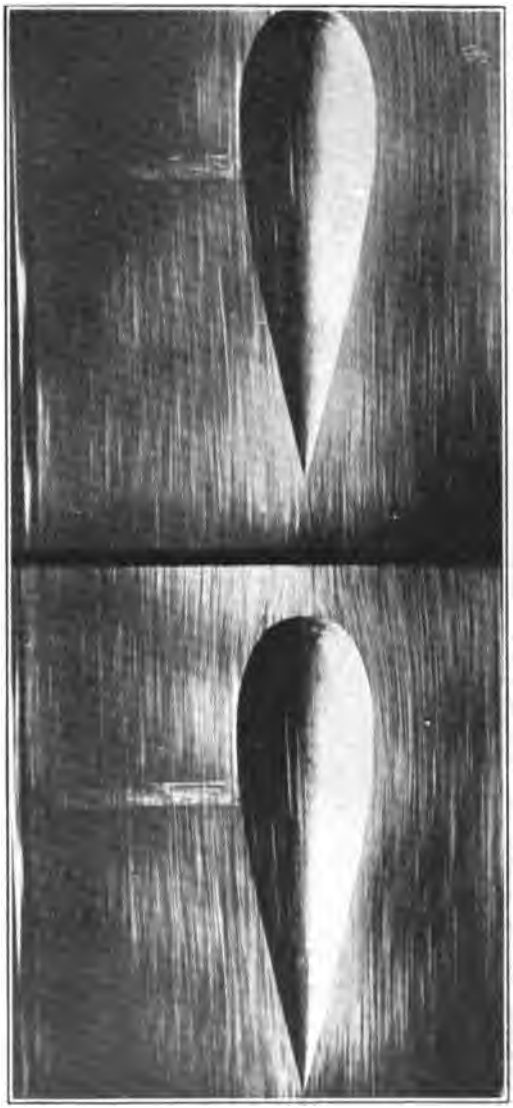

Fig. 8. Stream Lines, Moving Camera (After Ahlborn).

smoke in air, the line of such thread is not always directed along the stream lines but may lie across them and actually drift broadside on. A line connecting the same particles of fluid may elongate, bend and change its form in any complicated way in order to connect the same particles. Such a line is a filament line and in an instantaneous photograph gives no indication of the stream lines. Care must be taken to distinguish filament lines in photographs of fluid motion.

Limit of Continuity, Discontinuity.

Bernoulli's equation states that along any stream line

$$p + \frac{1}{2}\rho V^2 = p_o, \text{ a constant.}$$

Hence if p_o be finite, as is the case in all real problems, V may increase until p must be given a negative value to satisfy the equation algebraically. Since a negative pressure implies a tension, and under ordinary conditions, fluids cannot support tension, the fluid breaks apart and discontinuity commences. Continuous flow then is not possible unless the static pressure p_o be great or the velocity V small.

When the stream lines about a body are steady and continuous, the fluid follows the contour of the surface. If there be abrupt changes of form, the fluid must follow these changes. Since the fluid has mass, it cannot turn a sharp corner except under infinite pressure. When the body has a radius of curvature r, the fluid can follow the curve only provided the pressure gradient $\frac{\partial p}{\partial r}$ at that place is sufficient to overcome the centrifugal force $\frac{\rho V^2}{r}$.

Discontinuity then will commence where abrupt changes of form are made. Fish, torpedoes, submarines, air ships, birds, etc., are of easy form and the flow about such bodies should be nearly steady and continuous. Since, except for friction, steady streamline flow involves no resistance to motion, bodies of easy form are bodies of minimum resistance.

The criteria for discontinuity indicate, as is borne out by practice, that for low speed a body may be made more blunt than for high speed, without producing undesirable turbulence. For ships' propellers cavitation is delayed by deep immersion and low tip speed.

Resistance, Discontinuity.

In general, stream-line motion is steady and continuous up to the region of the body where discontinuity begins. The stream lines over the bow conform closely to the theory of continuous steady motion and exert a pressure on the body. Over the after part of the body, in the region of turbulence the fluid has not closed in. On the contrary there is an eddying wake, and the body may be subjected to an actual suction. The resultant pressure distribution along a meridian is no longer symmetrical but

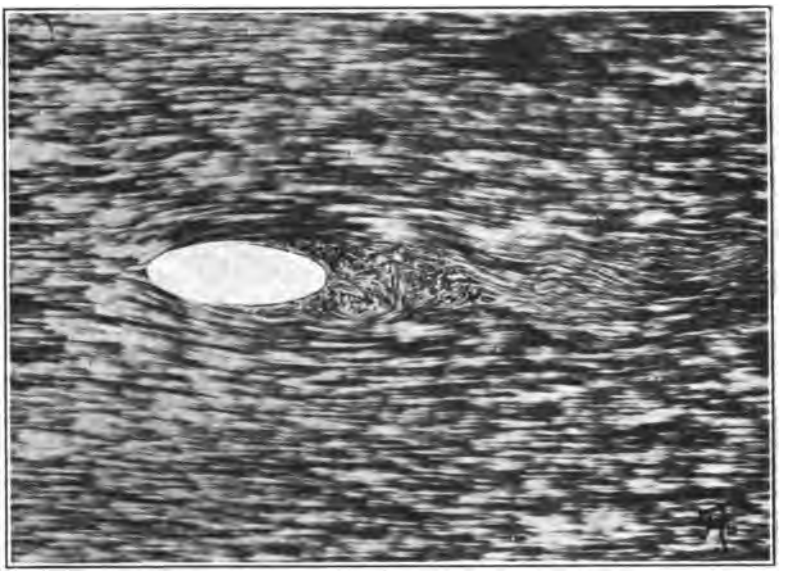

Fig. 9. Cavitation in Water (After Ahlborn).

has a component directed to the rear. This is a resistance to motion and is quite independent of friction. It has been called "form resistance" and can occur in a perfect fluid when discontinuity has commenced.

The model of Figs. 7 and 8 under the conditions of the experiment gives rise to an approximate stream-line motion. This shape should have a low form resistance. Fig. 9 shows the flow relative to a less perfect model. Note that discontinuity commences near the maximum section. The flow up to this point is steady, but the wake is turbulent.

Fig. 10 shows a sharp-edged body placed broadside to the direction of motion. As would be expected, the fluid does not turn the corner but shoots off, leaving a great turbulent space behind, which is even wider than the obstruction. Discontinuity is here well developed. The "staupunkt" on the face of the plate and the characteristic twin eddies on the back are clearly shown.

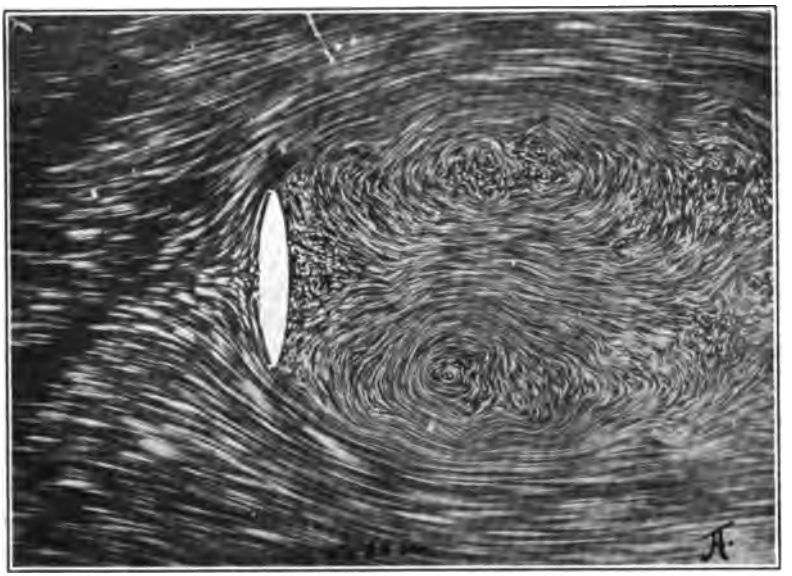

Fig. 10. Twin Eddies in Wake (After Ahlborn).

The photograph indicates the velocity of each particle by the length of the track of light made during the period of exposure of the plate. Note the dead water on the rear surface of the plate and the rapid whirl of the eddies.

Helmholtz-Kirchhoff Discontinuity.*

In order to represent the conditions of flow where discon-

* Helmholtz, "Über discontinuirliche Flüssigkeitsbewegungung", Berlin Monatsber., Apr. 1868.

Helmholtz, "Über discontinuirliche Flüssigkeitsbewegungung," Phil. Mag., Nov. 1868.

Kirchhoff, Crelles Journal, 1869.

Lord Rayleigh, Phil. Mag., Dec. 1876.

Lamb Hydrodynamics, p. 100.

tinuity has commenced, Helmholtz and Kirchhoff have imagined a type of steady motion of perfect fluid in two dimensions. Here the assumption of an infinite head is replaced by that of a finite head. At the points where discontinuity begins, there is a free surface (jet of water issuing from an orifice into air) or a surface of discontinuity along which the moving fluid is in contact with fluid at rest. The velocity at a surface of discontinuity is discontinuous in crossing the surface. The surface of discontinuity is an equipotential surface (pressure constant); hence the

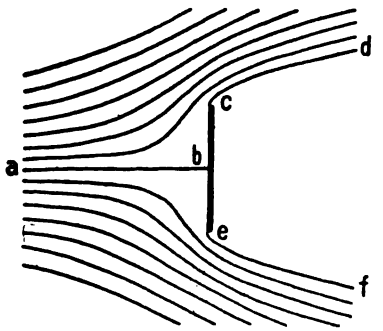

Fig. 11. Discontinuous Flow, Helmholtz-Kirchhoff Type.

component of velocity perpendicular thereto is zero. It has been shown that a surface of discontinuity is unstable and must quickly break down; i. e., if waves are set up on the surface, their amplitude increases without limit. (Lamb, Hydrodynamics, p. 390.) It is here assumed that the surface separates fluids of the same density.

The theoretical stream lines past a plane lamina placed broadside to a stream are shown on Fig. 11. Two dimensional flow only has been solved, and the lamina is imagined of infinite length.

This figure bears a resemblance to the actual flow observed by Ahlborn in Fig. 10. In a real fluid, the Helmholtz-Kirchhoff type of flow appears to be unstable and the dead water, if it ever form, quickly breaks into an eddy system of more or less complexity. The pressure on the back of the lamina is observed to be less than the general hydrostatic pressure assumed when no eddies are

formed. The actual resistance observed experimentally is, therefore, greater than would be indicated by theory.

Line Vortices and Cyclic Motion.

If the velocity potential, ϕ, be a cyclic function, the resulting motion is a flow in concentric circles about an axis, such as velocity $V = \frac{c}{r}$. The velocity varies inversely as the radius. The potential in polar coordinates is $\phi = c\,\theta$. Such motion is irrotational since the small elements of fluid do not turn about their own axes.

The circulation along any line is defined as the line integral $\Gamma = \int V ds$. For the closed circular stream lines of a columnar vortex $V = \frac{c}{r}$, and integrating around the circle $\Gamma = 2\,\Pi\,r\,V = 2\,\Pi\,c$. In this expression c is a constant. Cyclic motion may take place around a frictionless solid cylinder, around a liquid cylinder in rotational motion as a solid body, or around a vacuous core of finite cross section if the pressure at infinity is properly adjusted. Without such a core the velocity at the center of the cyclic motion would be infinite. It is usually assumed that the circulation takes place about a small core of finite diameter forming a boundary. The external region is double connected. Cyclic motion may take place about a core of various shapes, such as a ring, a knot, or any complicated figure. The simple problem of cyclic motion about a cylindrical core is discussed here as a "columnar vortex".

Leaving aside the question of the production of the motion, we may imagine cyclic motion to exist around any unsymmetrical object such as an aeroplane wing of infinite span. The combination of a cyclic motion with a motion of translation gives an unsymmetrical flow. The velocity on one side is augmented; on the other, diminished or even reversed. Hence there is an excess of pressure on one side and a constraining force must be applied at right angles to the direction of motion.

The combination of a circulation and a uniform motion of translation V is shown in Fig. 12. The stream lines above the axis are shown drawn together, indicating increased velocity and diminished pressure. Near the axis, the stream lines approximate to concentric circles and within the line *aaaa*, the cyclic

motion is little affected by the general current. No fluid passes across this line. There is one point of zero velocity where $V = \frac{c}{r}$.

Vortex Motion.

If at any point we draw an element of length along the instantaneous axis of molecular rotation and continue the process at adjacent and subsequent points, we obtain eventually a curve the tangent to which is everywhere in the direction of the instantaneous axis of molecular rotation. This curve is a "vortex line" or "vortex filament". If we draw all the vortex lines which pass

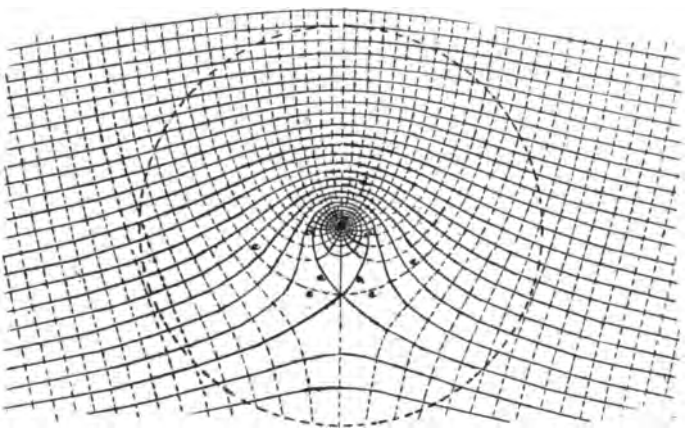

Fig. 12. Cyclic Motion Combined with Translation (After Lanchester).

through a small closed curve in the fluid, we obtain a "vortex tube". Motion inside such a tube is rotational. A vortex tube with rotational motion inside and irrotational cyclic motion outside is called a vortex "core", the combination is called simply a vortex.

For the columnar vortex the circulation along a circular stream line enclosing the core is $\Gamma = 2 \Pi c = 2 \Pi r^2 \omega$ and is constant for all such stream lines. ω is here angular velocity, and hence the product of angular velocity into area of path is constant at all external points. The product $\Pi r_2 \omega = m$, the strength of the vortex.

The columnar vortex is stable in its motion and in a perfect fluid would persist if once created.

A vortex cannot begin or end at a point in the fluid. Any vortex tube must either form a closed curve or else traverse the

fluid beginning and ending on its boundaries. The cyclic constant Γ is twice the strength of the vortex.

The velocity at any point in the fluid a distance r from the vortex is $\frac{m}{\pi r}$, and is perpendicular to the radius vector.

Two parallel rectilinear vortices of equal strength and opposite rotation constitute a "vortex pair".

Lamb* gives an interesting example of the mutual reactions of two vortices of strength m_1 and m_2. Let A and B be their centers. The motion of each filament as a whole is entirely due to the other, and is perpendicular to the line AB. Hence AB remains of constant length and rotates about some fixed point O.

$$AO = \frac{m_2}{m_1 + m_2} \cdot AB.$$

The angular velocity of AB is $\frac{m_1 + m_2}{\pi AB^2}$.

If $m_1 = -m_2$, a vortex pair, O is at infinity. AB then advances parallel to itself with velocity $\frac{m}{\pi . AB}$.

The motion at all points of the plane bisecting AB at right angles is tangent to that plane. This plane could be replaced by a rigid wall. A rectilinear vortex is thus shown to move parallel to a wall with velocity $\frac{m}{2\pi d}$ where d is the distance from the parallel wall. The vortex acts as if it were influenced by its image.

Vortex Rings.

A vortex ring is a cyclic motion about a vortex tube which forms a ring. A familiar physical example is the smoke ring formed by expelling smoke-laden air suddenly through a sharp edged circular orifice.

The mutual action of one part of the ring on the remainder gives rise to an advance of the ring as a whole through the fluid in a direction perpendicular to the plane of the circle. Vortex rings with finite circular cores lend themselves to mathematical treatment more readily if the diameter of the core is small with respect to the diameter of the aperture.

The approximate velocity of advance of such a ring is:

$$\frac{m}{2\pi R} \log_e \left(\frac{8R}{a} - \frac{1}{4} \right),$$

* Lamb, Hydrodynamics, p. 245.

where m is the total strength of the vortex, R the radius of the aperture of the ring, and a the radius of the section of the core.

The velocity of the fluid at the center of the ring is approximately $\frac{m}{R}$, and its direction coincides with the translation of the whole ring.

The vortex ring is stable, but in a real fluid, friction rapidly destroys the angular velocity and the ring soon comes to rest.

The beautiful phenomena incident to the encounter of two or more rings cannot well be discussed in a summary. The mathematical literature of vortex motion is enormous. The principal references are given by Lamb as foot-notes to Chapter VII of his "Hydrodynamics".

Magnus Effect.

In a real fluid possessing viscosity, such as air, a rapidly rotating cylinder probably drags a cyclic motion round with it. The existence of a transverse force exerted on a rotating cylinder held stationary in a current of air was demonstrated by Magnus in 1853. More rcently Lafay* has measured the so-called Magnus effect. He found that the total or resultant force exerted on a 10-cm. cylinder by a wind of 27 meters per second was quadrupled if the cylinder were rotated 10,000 revolutions per minute about its axis. Furthermore, the direction of this resultant for the rotating cylinder was inclined about 60 degrees to the direction of the wind. Variations of the experiment showed that the effect was due to friction of the air, and that the stream lines roughly resembled those of Fig. 12, obtained by combining a cyclic motion and a translation.

The drift of projectiles from rifled guns, the pitching of curved base-balls, irregular flight of golf and tennis balls† are all examples of the Magnus effect.

* M. Lafay, "L'Aérodynamique du cylindre et le phénomène de Magnus", Revue de Mécanique, May 1912.

† Lanchester, Aerodynamics, p. 43.

H. Lamb, Hydrodynamics, p. 89.

Lord Rayleigh, "On the Irregular Flight of a Tennis Ball", Mess. of math., t. VII, 1878.

Sir G. Greenhill, ibid., t. IX, p. 113, 1880.

Tait, P. G., Collected Works, Vol. II.

King, L. V., Golf Illustrated, New York, Feb. 1915.

Vortex Theory of Sustentation.

A flat or arched surface like a bird or aeroplane wing in the potential flow theory, if inclined in a stream of the mathematician's perfect fluid, would offer neither resistance nor lift. We know that in air the facts are otherwise.

Inclined at a large angle, we may imagine, if the static head is finite, that discontinuity may commence of the Helmholtz-Kirchhoff type. In such a case, resistance and lift are certainly accounted for. The "dead water" on the back of the wing in

Fig. 13. Aeroplane Wing. Turbulence at 18°.

real fluids is a turbulent region of diminished pressure. Consequently, the total force on the wing is much greater than would be indicated by this theory. Actual experiment has shown that tho the above theory fairly well accounts for the pressure on the lower face of the wing, the suction over the back really contributes over 60 percent of the total force observed.

Fig. 13 shows a model aeroplane wing* inclined at a large angle (18 degrees) to a stream of water, and Fig. 14 the same model inclined at a small angle (2 degrees). The motion is made visible by oil drops illuminated by a strong light. The exposure was one second in duration.

The motion for a large angle of incidence is clearly seen to be turbulent and discontinuous, but for the small angle of inci-

* E. F. Relf, Report No. 76, Technical Report of the Advisory Committee for Aeronautics, 1912-13.

dence the motion is approximately steady. The fluid appears to follow the contour of the wing section. Turbulence does not commence for this type of wing until the inclination is greater than six degrees, yet the lift is excellent at small angles. In fact the ratio of lift to resistance, which is a fair measure of the effectiveness of the wing for aeronautical purposes, reaches a maximum of about 16 for an angle of four degrees and falls off rapidly for higher angles. In aeroplane design angles of incidence of 4 degrees or less are commonly employed.

Fig. 14. Aeroplane Wing. Steady Flow at 2°.

The Helmholtz-Kirchhoff solution will not account for this physical property of an arched surface, nor will the classical potential flow. Indeed, the discovery by Langley of the surprising effectiveness of arched surfaces at small angles† opened the way to the success of the modern aeroplane.

It is probable that the theoretical work of Kutta was unknown to Langley. In 1902 Kutta* published his now well known theory of the sustentation of arched surfaces. Kutta considered the flow in two dimensions about a circular arched surface of infinite lateral extent placed with its chord parallel to the general stream. He assumed that the fluid left the rear edge on a tangent to the surface in order to avoid discontinuity. From symmetry, the fluid also encountered the leading edge tan-

† S. P. Langley "Experiments in Aerodynamics", 1891.

* Kutta, Ill. Aeron. Mitteil. 1902, p. 133.

gentially. To provide that the flow shall be so, a circulation round the surface must be superposed on the ordinary potential flow of the stream. The resultant motion so obtained gives a diminished velocity over the face and an increased velocity over

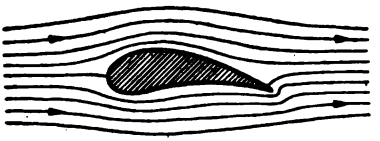

Fig. 15. Potential Flow.

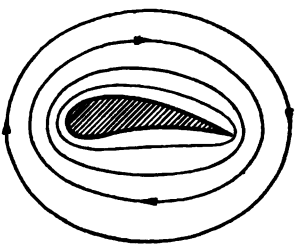

Fig. 16. Cyclic Flow.

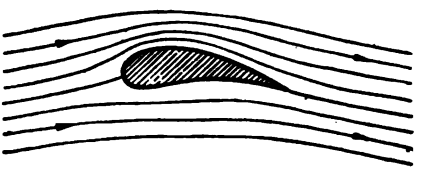

Fig. 17. Combined or Kutta Flow.

the back of the aerofoil. The transverse force due to the pressure difference is per unit width: Lift $= \rho v \Gamma$.

The lamina is considered to be of infinite length. In a frictionless fluid Kutta's theory indicates no resistance to motion. The composition of the potential flow and cyclic component is shown by Figs. 15, 16, 17 (after Prandtl). Note the resemblance between Figs. 17 and 14 above.

The Kutta theory was developed to explain the lifting power of Lilienthal's surfaces. The theory was extended by Tschapligin* and Joukowski†, to include the case where the chord of the aerofoil made a small angle to the direction of the stream. With a thin plate in this attitude, Kutta's theory requires an infinite velocity at the leading edge, since the fluid cannot flow along the tangent to both the leading and rear edges for lack of symmetry.

The difficulty is obviated by thickening and rounding the leading edge. In practice we find all birds and aeroplanes having wings with the thickened front edge and sharp rear edge required by theory to avoid discontinuity at small angles.

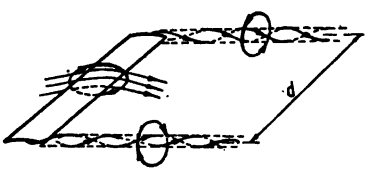

Fig. 18. Aeroplane Wing with Trailing Vortices.

The cyclic motion round the wing is only possible theoretically if the wing extend laterally to the boundary of the fluid, or what is equivalent, if a vortex filament extend from the wing tips. Such a vortex filament extending from the wing tips would be blown back by the general stream into the position shown on Fig. 18. We have here two parallel rectangular vortex filaments forming a pair, separated a distance d equal to the wing span. At a distance from the aeroplane, the vortex pair by mutual action moves downward with a velocity $\frac{\Gamma}{2\pi d}$.

Prandtl has shown that, per unit time, a length of vortex V must be created anew. The downward momentum of the vortex pair represents momentum supplied by the aeroplane. The impulse of the vortex pair is equal to the lift of the wing and is measured by $\rho\,\Gamma\,d\,V$, where ρ is density of fluid, Γ circulation, d span of wing, and V velocity of translation.

* S. Tschapligin, Moskauer Math. Sammlung, 1910.

† N. Joukowski, "Geometrische Untersuchungen der Kuttaschen Strömungen", Phys. Sek. d. Kgl. Gesellschaft der Freunde der Naturkunde u. Ethnologie, Bd. 13, 1906.

The qualitative discussion of vortex filaments extending from the tips of the wings to the boundary of the fluid is due to Lanchester. If air were a perfect fluid, the trailing vortices would extend to the earth's surface, and there transmit the weight of the aeroplane. Actually, the trailing vortices are continually formed, but as quickly frittered away by viscosity. Ahlborn has photographed them for an aeroplane model, and named them "wirbel zöpfen" or "whirling pigtails"—a truly descriptive name.*

Applications of Kutta Theory of Sustentation.

The Kutta theory of sustentation is obviously limited in application to aerofoil sections of moderate camber at such small angles of incident of chord to wind, that the flow is continuous and follows the contour of the section. Theory is applied in a frictionless fluid and consequently gives a lift but no resistance. In a real fluid, resistance is always present due to skin friction.

Föppl† has compared the lift of several aerofoils determined experimentally with the lift computed from theory. The following table summarizes the results, giving the lift coefficient K in the formula.

Lift $= K \rho l b V^2$, where $l b$ is product of length and depth.

	Camber 1/26		Flat plate	
Angles of incidence	0°	5°	0°	5°
By Kutta Theory	.25	.51	0	.32
By Experiment	.20	.49	0	.29

* The Kutta or vortex theory of sustentation may be followed farther through the following references:

Enzyklopädie der Mathematischen Wissenschaften, Vol. IV, Aerodynamik", by S. Finsterwalder.

Handwörterbuch der Naturwissenschaften, Vol. IV, "Flüssigkeitsbewegung", by L. Prandtl.

Lanchester, "Aerodynamics".

N. Joukowski, "Über die Konturen der Trägflaschen der Drachenflieger", Zeitschrift für Flugtechnik und Motorluftschiffahrt, Heft 22, 1910.

A. Betz, Zeitschrift für Flugtechnik etc. Heft 17, 1912.

W. Deimler, Zeitschrift für Flugtechnik etc. Heft 7 and 8, 1912.

L. Prandtl, Zeitschrift für Flugtechnik etc. Heft 3, 1912.

O. Föppl, Zeitschrift für Flugtechnik etc. Heft 14, 1911.

† O. Föppl, "Die Strömung um die schräg gestellte Platte in der theoretischen Hydrodynamik", Jahrbuch der Motorluftschiffstudiengesellschaft, 1910-11.

The agreement is not exact, but is closer than that of any other theory. Föppl's tests also show that the theory is entirely inadequate for a camber or arch as great as 1/12 or for angles greater than 8 degrees. These conditions are precisely those for the commencement of turbulence, when the theory by hypothesis breaks down.

In practice it has been observed that the tail of an aeroplane lies in the down draft from the wings. Föppl† shows that if the observed lift equals $\rho\, l\, \Gamma\, V = k\, \rho\, l\, b\, V^2$, the circulation constant may be computed.

At a point a distance x in rear of the center of the wing, the effect of w, the downward velocity due to the cyclic motion superposed on the general velocity V of the wind, is to cause the flow to be inclined by an angle β to its original direction. β is given by

$$\beta = \tan^{-1}\frac{w}{V} = \frac{bk}{\pi l}\left(1 + \frac{\sqrt{x^2 + \left(\frac{l}{2}\right)^2}}{x}\right)$$

β observed for a special case was exactly the angle computed from theory.

Deimler* has computed the suction over the back and the pressure over the face of an aeroplane wing as indicated by theory. Compared with the values determined experimentally for a similar section, the Kutta theory shows a pressure distribution of the same general nature, but somewhat exaggerated. The theory may, therefore, be expected to give a greater lift than experiment, as was found by Föppl. It should be remembered that the theory takes no account of friction. The probable effect of viscosity will be to reduce the theoretical lift, as will be discussed later.

A further application of theory to explain experimental facts has been made by Betz.§ It had been observed that the lift of an aerofoil was increased by a boundary surface below the wing. The condition is represented by an aeroplane very near the ground, as at starting or landing. The resistance was not increased by the proximity of the ground, but was, on the contrary,

† Loc. cit., p. 32.

* Loc. cit., p. 32.

§ Loc. cit., p. 32.

slightly decreased. For an altitude equal to 1/8 the span of the wings, the ratio, lift to resistance, was increased 22 percent for zero incidence and 14 percent for 5 degrees incidence. For greater angles the effect was less. These results were closely predicted by the theory of trailing vortices as influenced by their "reflections" in the boundary surface.

REAL FLUIDS.

Compression.

The perfect fluid is assumed incompressible. Water is practically incompressible for the purposes of hydrodynamic theory. Air being a gas is essentially compressible, but at moderate elevations is under a pressure of about 2000 pounds per square foot. By Bernoulli's equation the pressure on the nose of an air ship at 100 miles per hour would be $p_o = p_1 + \frac{\rho}{2g} V^2$

where $p_1 = 2000$ lbs. per sq. ft., atmospheric pressure,
$\rho = 0.08$ lbs. per cu. ft.
$2g = 64$ ft. per sec. per sec.
$V = 146$ ft. per sec.
Hence $p_o = 2000 + 26 = 2026$ lbs. per sq. ft.

The increase in pressure at this point is then about one percent. For ordinary transportation speeds, the effect of compression is commonly neglected. The tip speed of aeroplane propellers is, however, likely to be so high that some account of compression should be taken.

The compressibility of a fluid is measured by the velocity of sound in it. Bullets and projectiles are usually fired with an initial velocity considerably above the velocity of sound in air, 1100 feet per second. Compression waves or sound waves are thus set up which require loss of energy by the projectile. Turbulence at rear of the projectile is also present, and the disturbance here is so violent that a secondary set of sound waves is formed. Fig. 19 is a photograph* of a modern rifle bullet in flight. The velocity was above that of sound in air, hence the sound waves at the point and base trail behind the bullet instead of expanding outward in spherical surfaces. The vertical heavy lines on the figure are wires whose breakage operated the photographic mechanism.

* U. S. Navy Dept., Ordnance Pamphlet No. 422, Sept. 1913.

The resistance of a projectile is represented by a formula of the form $R = \psi \rho S V^2$ when ρ is density of air, S sectional area of projectile, V velocity and ψ a coefficient characteristic of the given form of projectile. The coefficient ψ is found to be a function of $\left(\frac{V}{U}\right)$, where U is the velocity of sound. With increasing velocity, ψ is found to remain nearly constant until the velocity U is reached, when a 200 to 300 percent increase takes place suddenly. This marks the beginning of sound wave propagation calling for a new loss of energy. Beyond this critical velocity, ψ remains approximately constant, falling slowly toward an apparent limiting value.*

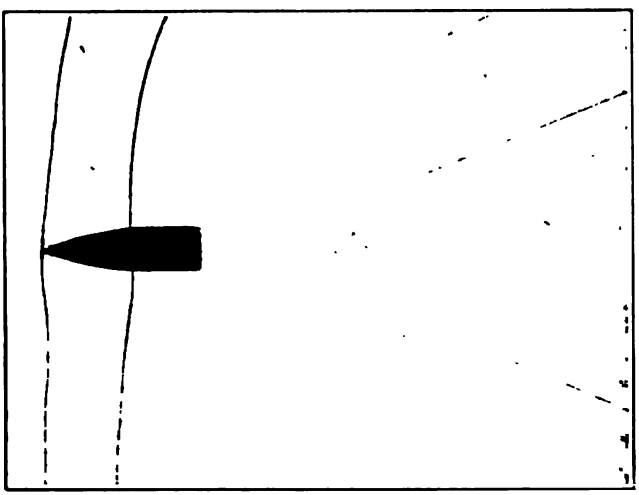

Fig. 19. Sound Waves and Bullet.

There is a temperature rise at the point of the projectile which (adiabatic law) is about 250 degrees C for 800 meters second (projectiles) and 200,000° C for 20,000 meters second (meteors).

For aeronautical engineers, compressibility of the air is mainly of theoretical interest. The flow of steam through noz-

* The literature is extensive. See Enzyklopädie der Mathematischen Wissenschaften: Bd. IV, "Ballistik" by C. Cranz; "Unstetige Bewegung in Flussigkeiten" by G. Zemplen; Bd. V, "Strömende Bewegung der Gase und Dämpfe", by L. Prandtl.

zles, and similar phenomena involving velocities above that of sound, are hardly within the scope of aerodynamics as applied to problems of aeronautics.

Density.

The resistance of a solid body to motion through a real fluid is largely due to the inertia of the fluid, or to the momentum communicated to it. In the perfect fluid, unless cavitation occur, no resistance to motion is encountered, since no work is done. According to the Kutta theory of sustentation, the lift of a given wing is equal to the downward momentum imparted per unit time to the fluid. The lift is $\rho \Gamma v l = k \rho l b V^2$, which then varies as the density, velocity squared, and square of a linear dimension.

From Bernoulli's equation, all pressures (per unit area) due to relative motion of fluid and solid body are seen to vary as density and velocity squared.

For unsymmetrical discontinuous motion in a real fluid, the turbulent wake is filled with eddies or vortex fragments whose kinetic energy is lost to the body. The rate of production of the kinetic energy in the wake may be shown to vary as the density, velocity squared, and square of a linear dimension of the body.*

Resistance due to the inertia of the fluid may be termed "form resistance", since it is dependent on the form of the body giving rise to the energy system. Form resistance is independent of the actual fluid (whether air or water), for velocities not producing appreciable compression, and depends merely on the form of the body and the density of the fluid. Since the density of water is about 800 times the density of air, form resistance for a given body in water should be 800 times its form resistance in air at the same speed.

The form resistance of symmetrical fish-shaped objects is small, but for unsymmetrical or sharp-edged bodies, such as an aeroplane wing inclined at a large angle to the direction of motion, form resistance should be large. The forces on aeroplane wings are, in fact, found to vary with the square of a linear dimension and as the square of the velocity, very nearly. The conclusion is then that the principal resistance is form resistance.

The Helmholtz-Kirchhoff type of flow gives a true form re-

* J. Pacotte, Tech. Aéronautique, Feb. 1, 1914.

sistance due to pressure on the face of the body. Due to the eddy system in the wake, additional form resistance is caused.

A plate moved broadside on gives rise to discontinuity at the edges, as shown above by Fig. 10. The breakdown of the dis-

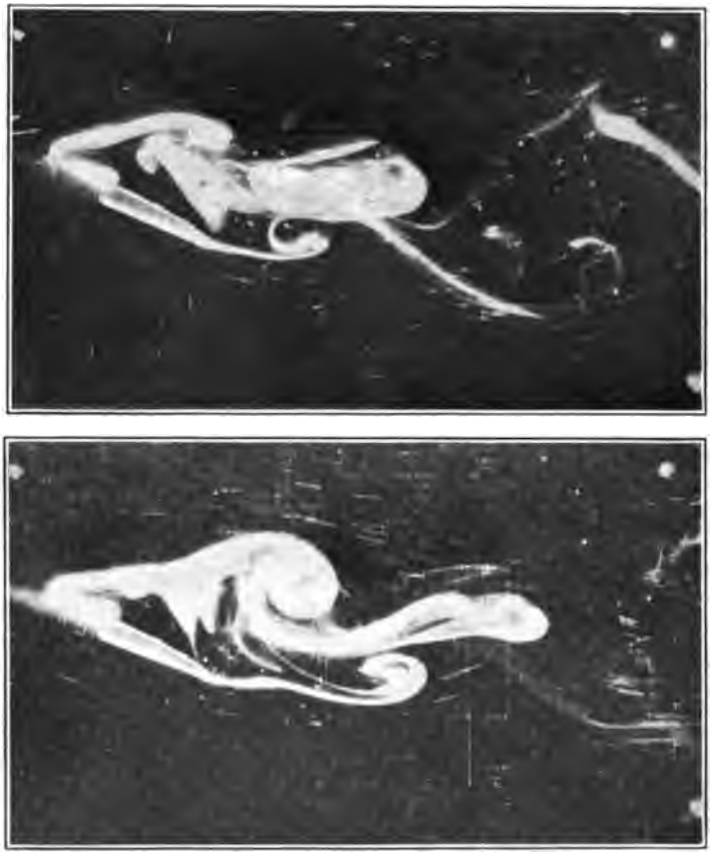

Fig. 20 (Upper) and Fig. 21 (Lower). Motion Pictures of Eddy Formation Behind Aeroplane Wing.

continuous surface into vortex filaments (for a disc, a vortex ring) usually follows at once. The natural velocity of translation of the vortex pair or ring is upstream, but is not great enough to maintain the vortex filament at its edge of generation on the plate. In consequence, the vortex is torn off and floats

down-stream in the wake. Immediately a new vortex forms, to be in turn carried down stream. The kinetic energy of these lost vortices represents a supply of energy from the agent moving the plate and hence a resistance to motion of the nature of form resistance.

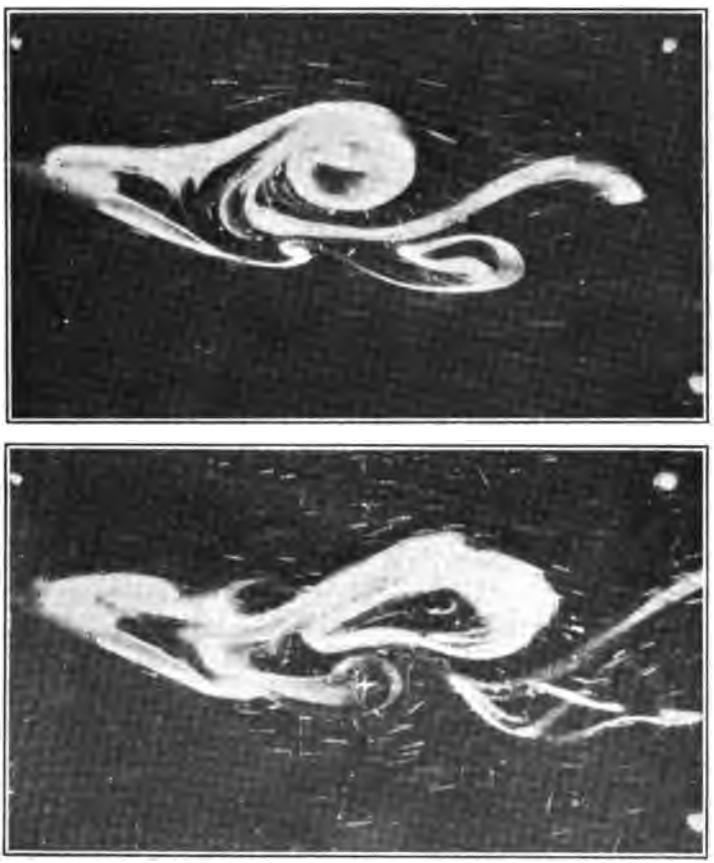

Fig. 22 (Upper) and Fig. 23 (Lower). Motion Pictures of Eddy Formation Behind Aeroplane Wing.

For an aeroplane wing inclined at a large angle, the vortex filaments formed at the front and rear edges are shed off in succession with a definite frequency. Without imagining how these vortices are formed, we can actually "assist at the birth of a vortex", in the words of Col. de Villamil. Figures 20, 21, 22, 23

are exposures from a motion picture film* showing the complete cycle of vortex formation in rear of a typical aeroplane wing. The vortices are made visible by condensed milk which forms filament lines in the water. The stream lines are shown by the oil drops (fine short lines). Current is from left to right.

Viscosity.

Real fluids, like air and water, are viscous and offer resistance to shear. Viscous drag per unit area of one of two plates separated unit distance and moved with unit relative velocity through the fluid is called the coefficient of viscosity. The fluid is imagined to stick to the surface of the plates. In general, the resistance per unit area is $X = \mu \frac{du}{dy}$, where $\frac{du}{dy}$ is velocity gradient. In a fine tube at low velocity, a viscous fluid sticks to the walls and the resistance to flow is a true viscous drag. The flow takes place in steady parallel stream lines (Poiseuille or laminar flow) with a delivery per second of

$$Q = p\frac{\pi a^4}{8\mu l}, \text{ average velocity } V = p\frac{a^2}{8\mu l},$$

resistance to flow $= p\pi a^2 = 8\pi\mu l V$, where l is length of tube, a radius, p pressure difference in length l, and μ the coefficient of viscosity.†

The resistance to laminar flow is thus seen to vary as the first power of the velocity, a linear dimension, and the coefficient of viscosity.

For capillary tubes where the adhesion of liquid to the walls is perfect, the above laws may be used to determine the coefficient.

For a solid body moved through a viscous fluid, whose boundaries are remote, there is a viscous drag due to particles of fluid which adhere to the surface of the body. The simplest case is a thin plate moved edgewise. The length is l and breadth b. Assume a thin boundary layer of fluid of thickness a which connects the particles next the body which have zero relative velocity with the particles in the current of velocity V.

A velocity gradient exists across this layer. This boundary layer constantly loses and gains fluid as it is rubbed off. In unit

* Technical Report of Advisory Committee for Aeronautics, Report No. 76. London, 1912-13.

† Lamb, "Hydrodynamics", p. 521.

time a mass of fluid proportional to $\rho\, a\, b\, V$ is captured and a definite portion of its velocity destroyed. The force or resistance due to the change of momentum is proportional to $\rho\, a\, b\, V^2$. However the resistance due to inertia must equal the viscous drag, which is proportional to $\mu\, b\, \frac{V}{a}$.

Hence a must be proportional to $\sqrt{\frac{\mu l}{\rho V}}$, and the resistance

$$F \backsim \mu^{\frac{1}{2}}\, b\, l^{\frac{1}{2}}\, V^{\frac{1}{2}} = \nu^{\frac{1}{2}}\, \rho^{\frac{1}{2}}\, b\, l^{\frac{1}{2}}\, V^{\frac{1}{2}}.$$

The ratio $\frac{\mu}{\rho}$ is called kinematic viscosity and is denoted by ν. It expresses a kinematic property of a fluid and indicates the relative importance of density and viscosity resistances for a given form under certain conditions.

The thickness of the boundary layer is shown above to be proportional to $\sqrt{\frac{\nu l}{V}}$. The ratio $\frac{l}{a} \backsim \sqrt{\frac{Vl}{\nu}} = \sqrt{R}$, where R is called the Reynolds' Number, to be discussed later.

The theory of the boundary layer, or "Grenzschicht", is due to Prandtl.* It appears above that the viscous drag on a solid body moving in a large expanse of fluid varies as the 1.5 power of the velocity and the 1.5 power of a linear dimension.

The boundary layer is a thin film of fluid which is at rest on the side next the body. The velocity gradient is at first very steep but flattens out quickly, until in the free stream the velocity gradient between stream lines is small. The theoretical potential flow then may be expected to exist a short distance outside the boundary layer. The pressures in the potential stream will be transmitted to the body by the fluid at rest in the boundary layer.

About an air ship hull for example, the pressure due to the potential flow is greatest at bow and stern and less over the middle body, due to increased velocity at that place. In a real fluid of small viscosity, the boundary layer is thin and under the pressure of the potential flow. But the thickness of this layer is nevertheless finite and its particles of fluid are subject to the usual laws of hydrodynamics.

Prandtl has shown that on the rear portion of the hull, the pressure in the boundary layer is greater aft than forward. The

* Verhandl. d. Intern. Math. Kongr. 1904.

particles must move from region of greater to region of less pressure, and hence forward. The boundary layer particles have already lost nearly all of their velocity, and if the pressure gradient be great along the surface, they may easily start forward. The forward motion of the boundary layer by viscous action still further slows up the stream lines of the potential flow in contact. This increases the pressure gradient along the surface and thickens the boundary layer. The potential flow is thus lifted away from the body and the intervening particles of fluid are set in rotation. Discontinuity and turbulence are then set up. The point of separation of stream from body travels forward until a point is reached when the pressure gradient along the surface is reversed. Forward of this point, the surface pressure is greater up stream and the potential flow is stable.

Viscosity then has the effect of causing turbulence where a strong reversal of pressure gradient along the body is found. The potential flow is to be expected over the forward part of a body and the shape of the nose is not of great importance. The after body must be of very easy form to prevent turbulence, and departure from the theoretical pressures of the potential flow may be expected here.

Experiment bears out the conclusions of the Prandtl theory, as will be shown later. Furthermore, we know that the actual surface, whether wet or dry, polished metal, varnish or wax is unimportant, indicating that the viscous drag is due to internal fluid friction and not to the sliding of fluid along the surface of the solid. Of course, geometrical roughness such as the threads of fabric is not here included.

DYNAMICAL SIMILITUDE, OR DIMENSIONAL HOMOGENEITY.

The theoretical treatment of fluid motion is so difficult and likewise so incomplete that aside from a few special problems, the principal use of hydrodynamic theory is qualitative: to explain the nature of observed phenomena and to guide experiment toward a logical and systematic attack.

The information needed by the aeronautical engineer is the complete determination of the force of the wind on any object in any attitude, be it air ship, wire, wing, rudder or other part of an elaborate machine. To determine the position, magnitude

and direction of the resultant force by full scale experiment is impracticable for all but a very few cases. Consequently resort is had to experiment with a small model which is geometrically similar to the object to be studied and held in a similar attitude.

The relative velocity of the wind only is of interest, so it is immaterial whether the model be tested by moving it through still air on a carriage or whirling arm, or held stationary in a current of air (wind tunnel), provided that the latter be free from turbulence.

By the principle of dimensional homogeneity we know that every term of a complete physical equation must have the same dimensions. In aeronautics, we wish to predict the resistance of a given object at a given speed from the known resistance of a geometrically similar object at another speed. The objects here considered are completely immersed in an ocean of air, so that surface waves and surface tension play no part. Since no surface waves are formed, gravity is not a factor. The resistance of a series of similar bodies in similar presentation may be supposed to depend in some manner on the size of the body represented by any linear dimension, and the properties of the fluid known to be important, viz., density ρ, kinematic viscosity ν, compressibility represented by U the velocity of sound, and V the relative velocity, assumed uniform.

The resistance F may be represented by some unknown function ϕ of these quantities as

$$F = \phi\,(L, \rho, \nu, U, V).$$

ϕ must be a function of the five variables combined in such a way that it has the dimensions of a force. The most general expression which satisfies this requirement is

$$F = \rho L^2 V^2 f\left(\frac{LV}{\nu}, \frac{V}{U}\right),$$

where f is an unknown function of the two variables $\frac{LV}{\nu}$ and $\frac{V}{U}$.

Projectiles.

Experience indicates that for projectiles the effect of viscosity is slight, as would be expected from the violence of the motion. Consequently $\frac{LV}{\nu}$ may be neglected, giving

$$F = \rho L^2 V^2 f_1\left(\frac{V}{U}\right) \text{ or } f_1\left(\frac{V}{U}\right) = \frac{F}{\rho L^2 V^2}.$$

The form of f_1 is unknown, but the above expression shows that since U is constant for air, V must be kept constant. In other words, a small model projectile must be tested at the same velocity as the prototype in order to predict the resistance of the latter.

The expression $F = \psi \rho L^2 V^2$ may be used, where ψ is $f_1\left(\frac{V}{U}\right)$. For projectiles of the same form but different size, fired at different velocities, a plot of ψ for each case, on $\left(\frac{V}{U}\right)$ as abscissae, is found in practice to give approximately a single curve for velocities both above and below that of sound in air.

Bodies of Easy Form.

If we consider bodies of easy fish-shaped form at ordinary transportation speeds, we may neglect compression of the air and write:—

$$F = \rho L^2 V^2 f_2\left(\frac{LV}{\nu}\right) = K \rho L^2 V^2,$$

where

$$K = f_2(R).$$

Here K is a function of the "Reynolds' Number", R, mentioned above.

The form of $f_2(R)$ is unknown. The resistance is part form resistance, which varies with $\rho L^2 V^2$, and part viscous drag, which varies with $\nu^{\frac{1}{2}} \rho^{\frac{1}{2}} L^{\frac{3}{2}} V^{\frac{1}{2}}$. However, if tests be run at a constant value of R the conditions are met.

For example, if we test a 1/50 scale model in air, we must keep VL constant, and if V were 50 miles an hour for the air ship, its model should be tested at 2500 miles per hour. The difficulty is only partly avoided by the use of water for the model. ν for water is 1/15 that for air, hence the test speed must be 167 miles per hour.

For wires, struts and parts of aeroplanes it is possible to make model tests holding the Reynolds' Number constant. Large air ships are obviously operated at too great a value of R to make model testing dynamically similar. The best that can be done is to test at the highest R practicable, and by comparison with the speed and power of full-sized ships to arrive at a conversion factor to apply to results of model tests.

Aeroplane Wings.

Aeroplane wings at small angles are subject to viscous drag, and hence their head resistance should depend on the "Reynolds' Number" to some extent. The compressibility is eliminated by considering ordinary transportation speeds. Then $F_x = \rho L^2 V^2 f_2 (R)$. If we assume $f_2 (R) = K_x$ we should find that K_x de-

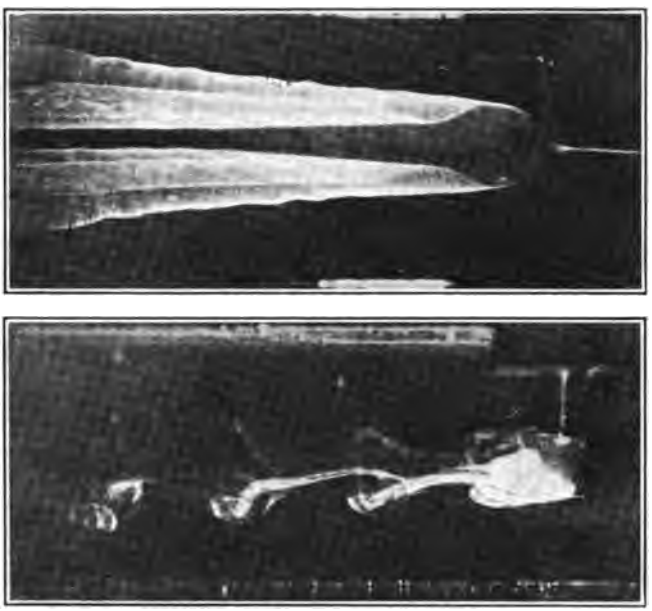

Fig. 24 (Upper). Low Velocity Type of Flow. Water.
Lower—High Velocity Type of Flow. Water.

creases slightly as R increases. This is due to the fact that viscous drag varies less rapidly than $L^2 V^2$.

The lift of an aeroplane wing at the small angles contemplated by the Kutta theory, as well as at larger angles where turbulence is established, should be proportional to $L^2 V^2$ from theoretical considerations. The same conclusion should apply to head resistance at large angles only. If $F_y \backsim \rho L^2 V^2$, then $f_2 (R)$ must be a constant, or $F_y = K_y \rho L^2 V^2$, where K_y is constant. Experiment indicates that K_y, the lift coefficient, is sensibly constant for any value of R. It is usual also to consider the resist-

ance coefficient K_x constant in $F_x = K_x \rho L^2 V^2$, but at small values of R, K_x increases appreciably due to viscous drag.

Model tests of aeroplane wings and all sharp-edged bodies or bodies of abrupt form giving rise to turbulence may, to a fair approximation, neglect viscosity. There is then no "corresponding speed" to seek.

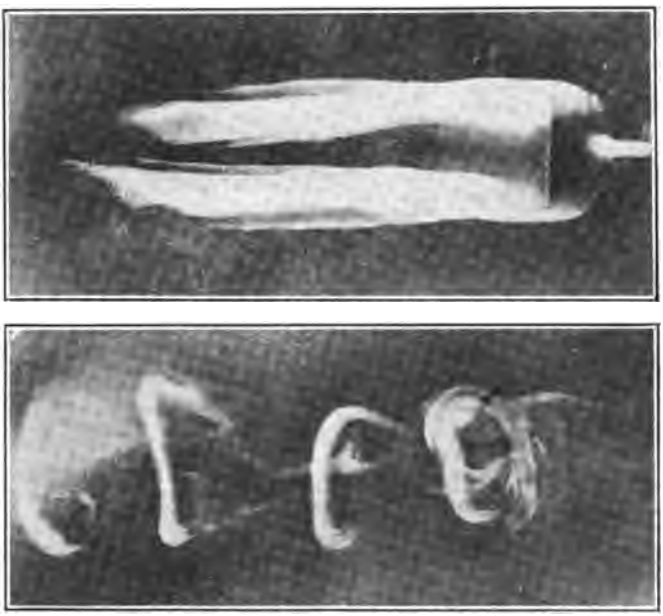

Fig. 25 (Upper). Low Velocity Type of Flow. Air.
Lower—High Velocity Type of Flow. Air.

Air and Water.

Dynamical Similarity in fluid motion indicates that, at ordinary transportation speeds, geometrically similar objects in similar attitudes give rise to similar fluid motions when the value of the Reynolds' Number is constant, regardless of kind of fluid, size of object or velocity. Thus air and water are alike in their properties for corresponding speeds, i. e., for R = constant.

The laws of hydraulics, hydrodynamics, and naval architecture apply to both air and water under proper restrictions of R constant and sufficiently deep immersion.

Experimental proof is extensive, but the most striking is contained in Figs. 24 and 25.*

Fig. 24 shows the flow in rear of a plate held normal to a stream of water. At very low velocity, surfaces of discontinuity resembling those of the Helmholtz-Kirchhoff theory are seen. At a certain critical velocity, these surfaces break into vortex rings which are carried down stream. At speeds above the critical velocity, the turbulent flow remains the same in character but the vortices are generated with higher frequency.

In a similar manner Fig. 25 shows the high and the low velocity types of flow for air. The critical velocity marking the beginning of turbulance in each fluid is associated with approximately the same value of the Reynolds' Number. The critical velocity of the plate in water was a few inches per second and in air about 15 times as great. Consequently, we infer that for the relatively high speeds of interest in aeronautics and naval architecture, sharp-edged objects give rise to turbulence, and their resistance should vary approximately as $\rho L^2 V^2$.

Considerations of dynamical similitude then lead to the following valuable conclusions:

1. Bodies of easy shape not giving rise to marked turbulence have a resistance which is a function of the Reynolds' Number, or which varies less rapidly than $\rho L^2 V^2$.

2. Bodies such as aeroplane wings at angles above 5 degrees, which give rise to marked turbulence, have a resistance which varies approximately as $\rho L^2 V^2$.

3. The lift of aeroplane wings at all angles varies approximately as $\rho L^2 V^2$.

4. The resistance of objects may be predicted from the resistance of reduced scale models tested either in air, water or other fluid, provided the conditions of dynamical similitude are met.

The most important treatments of dynamical similitude in fluid motion, as well as its application to general physical problems, are as follows:

Stokes "Math. and Phys. Papers", Vol. III, p. 17, 1850.
Helmholtz, "Wissenschaftliche Abhandlungen", Vol. I, p. 158, 1873.

* Technical Report of the Advisory Committee for Aeronautics, London, 1911-12, p. 97.

O. Reynolds, "Phil. Trans. Roy. Soc.", p. 935, 1883.

Lord Rayleigh, "Phil. Mag.", p. 321, 1899.

Lord Rayleigh, "Advisory Committee for Aeronautics, Report 1909-10".

H. Blasius, "Das Aehenlichkeitsgesetz bei Reibungsvorgängen", Zeitschr. des Ver. Deutscher Ing., Apr., 1912.

E. Jouguet, "La résistance de l'air et les expériences sur les modèles reduits", Rev. de Mecanique, Jan., 1913.

L. Bairstow, "Laws of Similitude", Engineering, Feb. 14, 1913.

E. Buckingham, Physical Review, Vol. 4, p. 345, Oct. 1914.

E. Buckingham, "Model Experiments and the Forms of Physical Equations", Am. Soc. Mech. Engr., June 1915.

Stanton and Pannell, "Similarity of Motion in Relation to the Surface Friction of Fluids", Phil. Trans. Roy. Soc., Vol. 214, p. 199, 1914.

EXPERIMENTAL VERIFICATION OF THEORY.

Form Resistance.

A most elaborate theoretical and experimental investigation by Fuhrmann* (assistant to Dr. Prandtl) has been made to develop a hull form for an air ship of minimum resistance. Starting from hydrodynamic theory, six forms were made by combining a uniform flow with six arbitrarily chosen source-sink combinations. In a perfect fluid these forms should have no form resistance. The distribution of pressure along a meridian of each form was calculated from Bernoulli's equation. A hollow model of each form was then placed in a wind tunnel, and by measuring the interior pressure when one pin hole after another was opened, the actual distribution of pressure was observed. Over the forward part of the model, the observed and calculated pressures were in good agreement. Over the after body the observed pressures were lower than calculated, indicating a form resistance caused by turbulence. The axial components of the observed pressures were integrated graphically and the true form resistance estimated.

The difference between total resistance and form resistance was then called viscous resistance. The form resistance was found to vary as $L^2 V^2$ and the viscous resistance as $L^\beta V^\beta$, where β was some number less than 2.

For the best model of the series, the observed and calculated

* "Theoretische und Experimentelle Untersuchungen an Ballonmodellen", Jahrbuch der Motorluftschiffstudiengesellschaft, 1911-12.

pressures were in the best agreement. For this model the viscous resistance was found to vary as $L^\beta V^\beta$ where $\beta = 1.49$. It was shown above that, theoretically, β should be 1.5. The pressure on the nose of the model was found to be exactly the $\rho \frac{V^2}{2}$ of Bernoulli's equation. This model was found to have a resistance but one eighteenth that of a disc of area equal to the midship section.

Reynolds' Number.

Stanton and Pannel* in their experiments on the resistance to flow of oil, water and air in smooth pipes found that, for all the fluids, the critical velocity which marked the break down of laminar flow into turbulent flow, came at about the same value of the Reynolds' Number.

Below this point the resistance varied according to Poiseuille's law. At high values of $\frac{VD}{\nu}$, the resistance varied nearly as $V^2 D^2$. Roughened pipes gave rise to a turbulent motion and resistance varied nearly as $V^2 D^2$, as would be expected.

The velocities of flow ranged from 30 to 600 cm. per sec. in pipes varying from 0.3 to 10.0 cm. in diameter. For all the experiments the value of $\frac{F}{\rho V^2}$, where F is resistance per unit area, was plotted on the corresponding value of the Reynolds' Number as abscissae. The points fell close to a single curve, regardless of size of pipe, velocity of flow or fluid used.

Further tests on the velocity distribution across a section showed the same velocity distribution at the same values of the Reynolds' Number.

These tests are considered to verify the theory of dynamical similarity for motion of viscous fluids in pipes.

SUMMARY AND CONCLUSIONS.

In the light of recent experiments, it appears that hydrodynamic theory furnishes a qualitative explanation of the facts of experience. The flow about symmetrical bodies of easy form is similar to that due to combining a source-sink system with a uniform flow. The lift of aeroplane wings at small angles is explained by the vortex theory of Kutta. For bodies that give

* Loc. cit., p. 51.

rise to turbulence, Prandtl's theory of the boundary layer gives a partial explanation of the production of eddy motion in the wake.

However, the conclusions to be reached from considerations of dynamical similitude, while in their deduction theoretical, are of such general application that the experimenter is able to dispense with all hydrodynamical theory, strictly so-called, in favor of entirely empirical methods.

By the use of models, complex problems of aerodynamics as applied to aeronautics may be investigated experimentally without any knowledge of the actual fluid motion present, provided the results are interpreted with full consideration given to the requirements of dimensional homogeneity.

Working in this manner, experimental aerodynamics may degenerate into the collection of empirical coefficients for multitudes of entirely unrelated and miscellaneous cases. The purposeless variation of one variable after another in such experiments rapidly leads to the accumulation of a maze of undigested information. The use of hydrodynamical theory is of great value in experimental research, not only to suggest variations of probable interest, but also to avoid experiments of obvious futility.

Inadequate theory employed as a guide in a qualitative sense, is better than no theory at all; also there is always the possibility that, stimulated by the pressing demands of aeronautics, there may be important contributions to our conceptions of fluid dynamics, and that eventually what is now but half understood may be made clear.

APPENDIX.

Aerodynamic Coefficients.

The aeronautical engineer, like the hydraulic engineer, is little concerned with the physical explanation of the force with which he has to do. His work is of a strictly engineering nature in the application of an orderly accumulation of information to his specific problems. His stock in trade is the collected data from experience. An important part of his work is the application in the design of air craft of the aerodynamic coefficients published by the laboratories.

In England, the "Technical Report of the Advisory Committee for Aeronautics", published annually, contains an immense quantity of matter ready for the designer's use. Likewise, in France, Germany, Russia and Italy, the regular publications of the aerodynamic laboratories cover the field of theoretical and applied aerodynamics.

The following publications are believed to furnish complete and trustworthy information.

"Technical Report of the Advisory Committee for Aeronautics", London, His Majesty's Stationery Office, for the years 1909-10, '10-'11, '11-'12, '12-'13.

"Bulletin de l'Institut Aérotechnique de l'Université de Paris", Dunot et Pinat, Paris, for the years 1911, '12, '13, '14.

"La Résistance de l'Air et l'Aviation", by G. Eiffel, Dunot et Pinat, Paris, 1912.

"Nouvelles Recherches sur la Résistance de l'Air et l'Aviation", by G. Eiffel, Dunot et Pinat, Paris, 1914.

Bulletin de l'Institut Aérodynamique de Koutchino, Kouchnereff and Co., Moscow. Vols. I, II, III, IV.

Jahrbuch der Motorluftschiffstudiengesellschaft, Berlin, for the years 1908-9, '09-'10, '10-'11, '11-'12, '12-'13.

Zeitschrift für Flugtechnik und Motorluftschiffahrt, Berlin, semimonthly periodical publishing research conducted at German Technical High Schools and Universities.

Paper No. 227

THE DEVELOPMENT OF REFRIGERATION IN THE UNITED STATES.

By

J. F. NICKERSON, Mem. Am. Assoc. Refrig.
Assoc. Am. Soc. Refrig. Engrs.
Editor, Ice and Refrigeration
Chicago, Ill., U. S. A.

Within the time of the present generation practically the entire industry of refrigeration has grown from a crude or experimental stage to its present magnitude, serving as an outlet for the best efforts and endeavors of hundreds of thousands of people, contributing to the advancement of the industrial arts, conserving millions of dollars worth of food products annually, equalizing extreme prices for seasonable products, sharing in the advances that medical science has made, increasing the supply of perishable food stuffs by greatly extending the market for same, thus stimulating production, and furnishing our tables with fruit and other delicacies that the previous generation considered luxuries, or were unable to secure. Withal, it has been a leading factor in making possible the fullness of present-day life.

A brief historical review of the evolution of mechanical refrigeration in the United States from the theoretical and experimental to the practical stage may be of interest. The production of ice seems to have been the chief incentive to the work of the early inventors and engineers, but the requirements of the brewing, meat-packing and other industrial establishments and the application of refrigeration for the preservation of perishable food products are largely responsible for the remarkable development of mechanical refrigeration during the last thirty years.

The constant effort of man has been to substitute for the cold natural atmosphere, which abstracts the latent heat from water in a slow and irregular fashion, a more powerful and

quickly applied agent under his absolute control. As early as the middle of the eighteenth century, scientists were experimenting upon "nature's abhorrence of a vacuum" to produce evaporation and refrigeration. It was by the application of this principle that Dr. Wm. Cullen invented a machine in 1755 which was the first to produce ice by purely mechanical means. He reduced the atmospheric pressure upon water in a closed vessel with an air pump, the evaporation from the surface of the water being so increased as to produce intense refrigeration and ice. This was the pioneer ice machine, not only of the vacuum type, but of any kind.

A few years after the invention of the vacuum ice machine the affinity that sulphuric acid has for water was discovered, and in 1810 Leslie made ice through this agency. In the meantime the Royal Institute of England had been founded (1799), and in 1823 Sir Humphrey Davy and Michael Faraday (chiefly the latter) had demonstrated that gases could be liquefied by pressure with continuous cooling to carry away the heat developed by work done on the gas. Volatile freezing mixtures were also used in a vacuum.

Jacob Perkins, an engineer and inventor, born in Newburyport, Mass., July 9, 1776, is generally accorded the credit for inventing the first machine, which was the forerunner of the modern compression apparatus, capable of producing ice in commercial quantities. His patent was obtained in England, August, 1834 (No. 6,662)—ether being the refrigerant employed. The evaporator containing the liquefied ether enclosed a system of pipes through which brine circulated, whose temperature was thus lowered to 5° F. The brine then passed into a long receptacle containing boxes filled with water, and having frozen their contents, was pumped back to be again subjected to the refrigerating effect of the expanding ether. Thus the cycle was completed and the principles established upon which most modern refrigerating machines are founded. The brine, or indirect system, was thus foreshadowed. The Perkins apparatus included the four principal features still in use in all compressor systems of today, viz.: the compressor, the condenser, the expansion or regulating valve, and the evaporator. It was also constructed according to the can system of ice making.

Professor A. C. Twining of New Haven, Conn., is the next figure to issue prominently into view as a practical inventor of ice-making machinery, although Dr. John Gorrie of Apalachicola, Fla., had been experimenting for a number of years previously with the cold-air type of apparatus. After having worked since 1848 with sulphuric ether as a refrigerant, in July, 1850, Professor Twining took out a patent in England, and in November, 1853, the U. S. Patent Office issued papers to him (No. 10,221) for the same mechanism. Professor Twining discovered among other things that water frozen at a temperature slightly below the freezing point would produce transparent ice, except the core, while if frozen at lower temperatures the ice cake would be opaque throughout. He is said to have had a machine in operation in Cleveland, Ohio, about 1855, which produced ice at the rate of 1600 pounds in twenty-four hours. Professor Twining's machine was considered such a practical success that he was requested to prepare estimates for a plant in New Orleans, capable of producing eighty tons daily. This he did, estimating "the total cost of $160,000 with machinery complete, buildings and grounds; and the daily expenses, maintenance, fuel, wages, oil, repairs to machinery and building, ether and all contingencies, at $120 per day, to which was added $26.30 per day for interest at 6 per cent on the investment, bringing the total daily cost for eighty tons up to $146.30, or $1.83 per ton". Although these figures are considered remarkable to this day for their accuracy, the scheme failed for lack of support.

To Dr. John Gorrie was issued the first patent in America for the manufacture of ice by mechanical operation. Dr. Gorrie, in the line of his professional work, commenced his experiments with cold-air machines as early as 1845, his design being to use them in the cooling of sick rooms and in the treatment of fevers and other diseases in which "cold" could be used as an alleviating agent. His machine had a compression cylinder, the air passing from it into a cooling chamber immersed in water. The patent (No. 8080) was issued on May 6, 1851, the letters patent to run from August 22, 1850. It is said that he actually made a small quantity of ice with a model machine at an Apalachicola hotel about this time; however that may be, his was undoubtedly the forerunner of the compressed air machine, later improved

upon. Although Dr. Gorrie was a resident of Apalachicola, Florida, he was stated, in the letters patent, to be of New Orleans, the explanation being that those who loaned him money with which to conduct his experiments required this concession from him. The inventor and physician died in the former city, June 16, 1855, virtually abandoning his practice during his latter days in order to develop his ice machine, although highly esteemed for his professional talents.

It was Ferdinand P. E. Carré of France who in 1858-1860 placed upon the market a machine which gave birth to the ammonia absorption machine system of today. The original machine was a very crude affair, consisting merely of two vessels—one surrounded by cold water, the other containing the ammonia and water. The original patent in the United States (No. 30,201) was issued October 2, 1860, the re-issue being dated February 18, 1873.

In 1863, during the Civil War, Mr. Bujac of New Orleans, La., shipped through the blockade and erected in Augusta, Ga., a small Carré machine having a supposed capacity of 500 pounds of ice per day. The machine, however, was not a success, due mainly to improper handling by those in charge. This machine was removed to Gretna, La., in 1866, to be used for exhibition and experimental purposes.

The firm of Bujac and Girarde of New Orleans had imported three other Carré machines from France, purchasing the patent rights for the United States. These machines were erected in New Orleans, but were not successful.

In the fall of 1865 the firm of Mepes, Holden, Montgomery & Co. purchased one of three Carré machines imported from France and shipped it to San Antonio, Texas. It was erected and put to work at that place under the supervision of the senior member of the firm, D. L. Holden. Although this machine was erected in accordance with the plans and specifications of M. Carré, after running it one season many changes had to be made, the principal one (and the first time this was ever done) being the placing of a steam coil in the still of the machine for the purpose of generating ammonia gas. At this time resort had to be made to distilling the water, on account of the lime and magnesia in it, when very much to the surprise of those operating

the apparatus the ice came out transparent, which was the first transparent ice ever made by any ice machine on a commercial scale.

In 1868 the Louisiana Ice Manufacturing Co. erected six 10-ton Carré absorption ice-making machines, which were constructed at Gretna, La., opposite New Orleans, by Sylvester Bennett, from plans furnished by M. Carré. The retorts or generators were made of heavy, double-riveted boiler iron and were heated by direct fire. The freezing tanks were made in the shape of a cross, each tank being about 7 by 6 by 4 feet deep. The cans holding the water to be frozen were 2½ by 10 by 30 inches deep, and when frozen weighed twenty-five pounds each. Five blocks were placed one upon the other, making a block of 100 pounds. This ice was not clear nor very solid, and was made of filtered river water, its color resembling stained alabaster. The public did not take to it kindly. The froth or foam arising on the surface of the water containing pieces of this melted ice gave rise to several objections, the most serious and common being that the ice contained ammonia and was unwholesome. The objection, although not real, caused the Louisiana Ice Company to employ a chemist to find, if possible, a remedy, selecting Dr. Joseph Albrecht of the United States mint (New Orleans), his advice being to boil the water before it was put into the cans, so as to drive off the air and gases it contained. The experiments in this direction were successful; subsequent experiments being made which led to the use of condensed steam instead of hot water.

In April, 1867, Prof. P. H. Van der Weyde, of Philadelphia, Pa., patented the use of naphtha, gasoline, petroleum-ether and other condensed petroleum gases as refrigerants, and in February, 1869, the United States issued him letters patent (No. 87,084) for his ice machine. His apparatus was of the vacuum type, consisting chiefly of an exhaust and force pump and cooling coil, and was arranged to produce both round and square pieces of ice. His machines were not utilized to any great extent.

Shortly after the installation of the Carré machines in New Orleans (1868), mentioned in the foregoing, Charles Tellier of France took out patents on his compression apparatus, whose refrigerating agent was methylic ether, and which was designed to make ice and refrigerate air and liquids. The date of his letters

patent in the United States was January 5, 1869, and in that year George Merz, a prominent brewer of New Orleans, imported a small machine from the works of the inventor and erected it in his plant, with the object of producing cold dry air and of making ale and lager beer without ice. As it was designed for ether, but ammonia was used, it did not work well and was finally discarded, although a commencement had at length been made in America of artificial refrigeration in breweries.

In September, 1869, April 1870, and at various later dates, Mr. Holden obtained patents on his refrigerating apparatus. His first patent was No. 95,347, dated September 26, 1869. The machine (known as the Regealed), which was the culmination of Mr. Holden's thirty-five years' experience in business, forms the ice on the outer surface of a revolving cylinder, from which it is removed by a scraper; the resulting flakes or scales of ice being afterward compressed into cakes. The apparatus is designed to use either the compression or absorption system.

John M. Beath was another early and practical American inventor of ice-making machinery. In connection with Samuel B. Martin, he constructed an ice plant during 1869 at Los Angeles, California, and in 1870 and 1871 at San Francisco and Portland, Ore., respectively. These plants were operated by compression machines and the ice was made in the first two by the plate method and in the last by sprinkling the water to be frozen upon freezing or congealing surfaces. The first patent was granted to Beath and Martin as joint inventors May 28, 1872 (Martin having furnished the capital), and was reissued on July 16, 1872, to make it stronger. The patent specification described the first flooded system in which the flow of refrigerant to the evaporating coils was governed by the quantity of liquid in the evaporator itself.

In 1872 Mr. Beath constructed an ice plant in Chattanooga, Tenn., using an absorption refrigerating machine. This plant operated successfully the following winter. The ice was frozen as in the Portland, Ore., plant, on vertical pipes over which water was sprayed by rotating sprinklers. The ice was allowed to accumulate until the space between the pipes was filled, and although considerable labor was experienced in cutting this ice out, also with no small percentage of waste, this factory caused

a permanent reduction in the price of ice in Chattanooga of over fifty percent. Beginning in January, 1874, Beath applied for three patents covering the ice-making machinery in this plant. The atmospheric coil absorber used was a main feature. These patents were all issued in 1875. The success of the Chattanooga factory was such that Beath organized in 1874 the North American Ice Company and erected plants in Galveston, New Orleans and Atlanta in 1875. In the interval between the erection of the Chattanooga and the other southern plants Beath returned to San Francisco and improved and enlarged the plant in that city.

Patent office records show that besides the patents mentioned above, one was granted April 13, 1875, to Beath and Martin as joint inventors, and to Martin as sole inventor on May 5, 1874, and April 20, 1875.

In the early seventies the so-called cold-air or compressed-air machines monopolized to a great extent the attention of both inventors and the commercial world of refrigeration. Franz Windhausen of Brunswick, Germany, was the foremost exponent in this field, and his machines were soon installed in German and American breweries. The original letters patent were issued in the United States on March 22, 1870, and are described as relating "to that class of freezing and ice making machines in which atmospheric air is compressed, then passed through a cooler and afterward expanded to remove the heat (or, in other words, to produce cold), but which machines have hitherto been limited in their cold producing properties by the degree of expansion to which the air is subjected and by the temperature of the cooling water employed". Windhausen patented his vacuum machine in Germany in 1877, and subsequently in the United States. In 1878 he invented his compound vacuum pump for producing ice on a large scale, and greatly improved it in 1881, so that his machine would produce fifteen tons of ice in twenty-four hours—which was considered remarkable for that time.

A few years after the Windhausen cold-air machines were placed on the market, another German inventor came into the historic foreground, Prof. C. P. G. Linde, of Munich, Bavaria, who introduced his ammonia refrigerating machine in 1873-1875. He is now generally considered one of the foremost early expo-

nents of the compression system. The first attempt at putting the machines in operation was made in 1873, and in 1875 there was erected a compressor for sweet-water cooling in the Spaten Brewery, Munich. Professor Linde patented his machine in the United States in 1880. The first Linde machine in the United States was erected in the brewery of the Wacker & Birk Brewing & Malting Company, Chicago, in 1880, by Fred W. Wolf.

Capt. David Smith, the inventor of the plate system of ice making, was a native of Cape Cod, town of Chatham, Mass., born in 1829. He built his first machine at San Francisco in 1872, and, according to the statement of his nephew, Curtis M. Smith of Washington, D. C., it was a 1-ton can machine. This he took to Honolulu, and, although he made some ice, he had trouble in confining the ammonia; whereupon, he put his ammonia pipes inside of a large box. He filed an application for a patent based on this idea in November, 1875, and letters were granted him (No. 173,357) on February 8, 1876. Captain Smith was the first to freeze water on the outside of a congealing box with a coil of pipe immersed in brine, or in other words to use the plate system of making ice.

Raoul P. Pictet, professor of physics in the University at Geneva, Switzerland, had been experimenting for several years with the liquefaction of gases and refrigerating apparatus, prior to taking out his first patent in the United States in February, 1877. Pictet found that pure anhydrous sulphur dioxide may be successfully employed in an apparatus suitable for effecting therein its continuous alternate vaporization and condensation, so as to successfully manufacture ice and refrigerate air on a practical scale without injury to the apparatus, or the formation of ice within the vacuum or condensing pump.

One of the earliest inventors and builders of refrigerating machinery in the United States was Thomas L. Rankin, a native of Ohio, whose earliest experiments were conducted in the South. His machines were of the absorption type and were used in not a few of the breweries of the country. From 1868 to 1884 no less than twenty-four patents were issued to him. The application of his apparatus included its use for beer coolers, cold storage houses and refrigerating cars, for the manufacture of ice, for skating rinks, the refrigeration of breweries and packing houses, vessels

carrying meats, etc. The first patent on an ice machine issued to Mr. Rankin was No. 175,498, dated March 28, 1876.

David Boyle, a Scotchman, and a close associate of D. L. Holden, Thomas L. Rankin and other pioneers, made a remarkable, practical success of his inventions. From 1875 to 1878 Mr. Boyle was associated with W. B. Bushnell, of Quincy, Ill., in building ice-making and refrigerating machinery in Chicago, much of which was shipped to Texas. In 1878 the Boyle Ice Machine Company was incorporated in Chicago, and that company built a large number of ice-making and refrigerating machines.

In the early part of 1876 F. M. McMillan and Silas Merchant founded the firm of F. M. McMillan & Company, in Cleveland, Ohio, for the purpose of manufacturing and selling ice-making machines. They employed John Enright as their supervising engineer. The machine which they proposed to build was one designed by either Merchant or McMillan, and had a single-acting compressor. No patent appears to have been taken out for this apparatus, although previous to the organization of the Arctic Company it was known as the Silas Merchant machine. In 1877 Mr. Enright designed and built a machine having a vertical double-acting compressor. The patent for this compressor was No. 202,641. With the making of their machines in 1876, or at least soon after, F. M. McMillan & Company commenced the manufacture of anhydrous ammonia, although a patent for the drying of the gas was not issued to Mr. McMillan until March, 1879.

Charles J. Ball installed his first absorption ice-making machine at Sherman, Texas, in 1878, it having been constructed by him in St. Louis in the fall of that year. It was a modified Carré machine, the ice tank being only eight feet square, and the cans made of galvanized iron and copper. The ammonia pumps, water pumps, boiler-feed pumps, brine pump, etc., were driven by belt from shafting run by a riding cut-off slide-valve engine. The machine made about five tons of ice daily, with one ton of coal, the actual cost of installing same being $12,000.

In 1879 the first De La Vergne refrigerating machine was placed in the Hermann Brewery at No. 221 West 18th Street, New York City, the inventors of the original apparatus being

John C. De La Vergne and William M. Mixer. The material improvement claimed for their patent, over other refrigerating machinery based upon the compression and expansion of ammonia, was the effective means adopted for sealing the valves and joints and lubricating the internal mechanism of the compression pump, by the forced circulation of oil both ahead and behind the compressor piston, as stated in the patent specifications.

In March, 1879, Larkin & Scheffer of St. Louis started an experimental compressor, to make and ship anhydrous ammonia in suitable containers. It was in 1880, the year succeeding, that the Mallinckrodt Chemical Works of that city founded a plant for the manufacture of anhydrous ammonia. These were the forerunners of similar plants afterward established in various portions of the United States.

The decade from 1880 to 1890 marked a very considerable activity in the production of new apparatus. Among the American inventors of refrigerating machinery to whom patents were issued during this period may be mentioned the following: Thomas L. Rankin, Cassius C. Palmer, Thomas Cook, Charles G. Mayer, George W. Stevens, Richard Thoens, Francis V. De Coppet, Victor H. Becker, Fred W. Wolf, John Ring, A. F. Ballantine and H. D. Stratton.

A QUARTER CENTURY OF PROGRESS.

It is just twenty-five years since there occurred one of those fortuitous incidents which so often mark radical changes in the development of an industry. Through the art of refrigeration, considerable good work had been done in breweries and packing houses in the manufacture of ice and the cold storage of foods in a small way. But the methods used were singularly individualistic; each manufacturer had his own type of apparatus even to the smallest detail; there was to a very large extent no real refrigerating engineering. This and that was tried and if it proved effective its use was continued. Results were sought with but little regard as to how these results were obtained. Abroad there was some advance being made in the sciences applicable to the art.

During those dark ages, as they might be called when speaking of refrigerating engineering, the individual received

little if any assistance from the work done by others; practically no one published the results of what experiments he had made, and in many instances many men were spending their time and energy on the same problems. That there were men at that time who will always rank high in the list of refrigerating engineers there can be no doubt, and there is no desire to belittle the wonderful advance that was made, but had there been the spirit of cooperation, refrigerating engineering would have come into its own long before it did.

There were practically no standards; there were few, if any, attempts to treat the problems in a scientific manner, insulation in many cases was lost sight of, and losses were fought by expenditure of energy that might have been conserved.

There had also come about a diminution in demand for refrigerating machinery, many manufacturing companies saw no great future for the industry and took no steps to build up their plants, contenting themselves with making as much as they could from the business offered, believing that the volume would diminish rather than increase.

Such was the condition when manufacturers were called upon to meet what was, and will probably remain, the greatest shortage in the natural ice crop; from the Mississippi to the Atlantic Coast the cry went up for ice. While in a measure this circumstance was disastrous, for some undertook to supply in a limited time an amount of equipment that was so far beyond their capacity that they could not make the deliveries guaranteed, yet it awakened the public to the use of mechanical refrigeration as nothing else could. And thus the need for ice was again, as at the beginning, the chief incentive for the efforts put forth by the inventor and the manufacturer of refrigerating apparatus. The impetus given at that time was unquestionably the exciting cause of the wonderful development which the past twenty-five years have to record. It is well worth our while to pause and consider this quarter century of progress.

In the development of the refrigerating engineer himself is to be found the key note of the success achieved. As soon as it was apparent that in refrigerating there was something that could supply a long felt need, men with scientific and

mechanical training began to consider the problems. Some there were who were so narrow that they could not see that by associating themselves with those who had ideas much could be accomplished. These men passed into oblivion in spite of the good work they had done. On the other hand, there were those who were quick to see that a future did exist, that others could teach them something that could be applied to their apparatus; they left that old individualist's path they had been following and struck out with others along new trails.

An important factor in this new order of affairs was the establishment of the first trade journal in the world devoted exclusively to the ice and refrigeration industries.

In every industry the trade literature has had an important bearing on the development of the industry. This was particularly true with a new and chiefly experimental industry, as was the refrigerating industry in 1890. Every manufacturer, designer and builder of refrigerating plants was busy with his own problems, and, having solved the same, imagined that he was the only one who knew the secret and the world was his. There was no medium of interchange of thought and experience, no journal interested in disseminating news, awakening interest and promoting the industry in general. The first to step into this sphere of activity was "Ice and Refrigeration", conceived in 1890 and born July 1, 1891, when the initial number appeared. There were no books at that time available for the practical study of the science and application of refrigeration and the first book on this subject prepared in America was "The Compend of Mechanical Refrigeration", now in its ninth edition. This work was followed by other books, until at the present time there is an extensive library on the subject. The success of the pioneer trade journal in the refrigerating field brought into being a few years later other similar journals in various European countries, and some in this country, two of which are still in existence. These publications, by arousing interest and pointing out the vast field open for the application of refrigeration, stimulated scientific investigations and, by offering a medium through which the results obtained by the most expert in any part of the world were almost at once made

known to all others working in the same domain, were able to exert a vast influence in the development of the industry.

A few years later, in 1904, there was organized the American Society of Refrigerating Engineers, in which, as it exists today, the engineer finds that cooperation and assistance needed to advance the art.

Dead work has to a large extent been eliminated—one now begins where the other has left off, data are considered, criticized, and the help that results makes possible the rapid development of the idea.

As soon as the problems were attacked with scientific methods, it was found that much of our basic data was wanting, or if it existed, was wrong—something must be done. Much help was had from certain technical institutions, and certain manufacturers did yeoman service toward getting at the facts. An elaborate testing plant was erected at York, Pa., and most careful tests were made, the results of which were freely given out. But the engineers and the industry hungered for more and for that which would be authoritative. This required, besides money, the service of men trained in scientific investigation and research. The engineers themselves were not strong enough to secure this, although they had been urging it. Fortunately there had grown up in this country an association of men interested primarily in the commercial side of the industry, but who recognized the value that would accrue to all if these matters could be settled. This organization, known as The American Association of Refrigeration, put its shoulder to the wheel and things began to move. There has been built up what is known as the International Association of Refrigeration, composed of those throughout the world who are interested in the problems of refrigeration, and which today is the most powerful instrument for the development of the art that there is. The Third International Congress of Refrigeration, in conjunction with the great Refrigeration Exposition held in Chicago, September 17 to 24, 1913, under the auspices of the International Association, brought together a large number of the world's best thinkers and practical experts in refrigeration, including official government delegates from over thirty countries, resulting in the interchange of ideas, the statement

of problems and the attempts at their solutions, and was of inestimable value in stimulating desire for further research and experiment.

The influence that the American Association of Refrigeration was able to bring upon our government resulted in getting its cooperation in solving many problems that had arisen. And in the United States Bureau of Standards was found the instrument that could undertake a work not possible by private enterprise. When this Bureau has determined something it speaks with authority. It has already settled that long disputed question as to the latent heat of ice, and is now at work on other problems whose solutions engineers and the industry await with keen interest. With organizations striving to assist in the development, and a body of refrigerating engineers devoting their lives to the efficient application of the art to the needs that arise, and who are also pointing out where refrigeration can serve mankind, all of which has come about in largest measure during these later years, we can naturally look for a wonderful advance; and in this we are not disappointed. But as we stand today and look about us from the vantage point that has been gained, it can be seen that the future holds out promises for greater achievements, and he who writes of the next twenty-five years will have much to tell, but then it will be seen even more plainly than now how the past twenty-five years laid the broad foundation for future success.

To recount all the improvements made in the last 25 years would be an endless task, and yet it is well to call to mind some of the more important ones, and this will be sufficient to repudiate the statement which has been made that the refrigerating engineer has not made the progress that can be shown in some other lines of engineering.

In machine design the layman may perhaps not notice the changes which have taken place, but the scientific consideration of the problems of compressors has enabled the manufacturers to make their compressors more efficient without much change in appearance. There has, however, been one change in compressors which is apparent to the eye, and that is, where formerly the water jacket enclosed the entire cylinder, it is now confined to the end where the heat is generated; this is logical,

for the water is warmer than the gas returning from the evaporator, and if brought into contact with that part of the compressor which is cooled by the incoming gas, it will have a tendency to impart heat to the gas, thus expanding it, which is just what it is desired to avoid. On the other hand, if the water can be brought into more intimate contact with that portion of the compressor which is heated in the process of compression, it will be able to accomplish more good. Therefore, one now finds the heads well water-jacketed, while the suction ports are often insulated to prevent any heat absorption.

It is now well recognized that the matter of filling the compressor with as great a weight of ammonia as possible is most important. Compressors are in service using what is termed a "multiple effect" whereby these compressors are filled with the returning ammonia at a higher pressure than exists in the main evaporator, which is accomplished by opening a connection to the compressor after it has filled with the gas from the main evaporator, with a line from some source where the pressure is higher. The result is that this higher pressure does part of the work of compressing the cylinder full of gas. This higher pressure may come from another evaporator service maintained at higher temperature, or from a special evaporator where the ammonia liquid is cooled. Then again, rotary blowers have been installed on the line leading from the evaporator, whereby the gas is raised in pressure with a less expenditure of energy than would be needed in the main compressor, and the main compressor is increased in capacity by being filled with gas at a higher pressure.

Much thought has been given to getting the compressor to fill to as near as possible the pressure in the suction line, and this has been accomplished by overcoming the resistance offered by the suction valve. Today there are being tried various ways to further increase the efficiency. As low temperatures are demanded, some way must be found to compensate for the loss in compressor efficiency due to low temperature work. One of the ways is by the use of the multiple effect compressors.

The first patent on a multiple-effect compressor was issued to Gardner T. Voorhees of Boston, Mass., July 4, 1905, having

been filed July 30, 1903. Besides the customary discharge and suction ports for a compressor, Voorhees proposed an additional suction port with a valve governing it, opening into the cylinder from a source of higher-pressure gas. The operation consisted first of filling the cylinder with low-pressure gas and then allowing the higher-pressure gas to enter, partly compressing the gas already in the cylinder, the piston then compressing the mixture.

Other patents have since been granted to Mr. Voorhees covering a different application of multiple-effect principle to compressors and also a patent on a multiple-effect receiver.

The use of internal-combustion engines and electric motors is compelling the manufacturers of compressors to construct these so that they may operate successfully at speeds commensurate with such engines and motors, and this is being accomplished more rapidly than some are aware. A number of such plants are now in successful operation, producing refrigeration at an extremely low cost. In the case of ice factories making raw-water ice, the elimination of the boiler plant and distilling apparatus has materially reduced the items of investment and depreciation.

The ammonia absorption machines, operating on the principle that water absorbs ammonia gas at a low temperature and pressure and releases this gas at high temperature and pressure, have been greatly developed during the last twenty-five years and brought to a very high state of efficiency and simplicity and are now in frequent use and bid fair to become more and more a factor in plant economy, particularly for low temperature work. Especially is this true of the exhaust-steam absorption machines, which are making for greater plant efficiency, as they can be made to develop a large amount of valuable refrigeration from the exhaust that has heretofore been wasted. Truly no greater advance can be made in any industry than to find a use for that which is being wasted.

While ammonia machines have been principally mentioned, there have been as marked improvements in machinery using other than ammonia as the refrigerant. This is particularly true of the carbonic acid gas machine, the efficiency of which has been greatly increased, and a large number are now in suc-

cessful operation. They are claimed to be specially suitable for hotels, restaurants, on shipboard, etc. Some small SO_2 machines have also been introduced, and also an ethyl-chloride machine, having a rotary compressor. As the field of refrigeration widens, the question often arises, what refrigerant is best for a given purpose. No longer does one buy refrigerating equipment simply because it can produce refrigeration, but the purchaser now asks for the type of equipment that will be the best and most efficient for the purpose for which it is to be used and the particular conditions of operation.

For many years the ammonia condenser was considered as efficient as was needed; but here, too, the desire for more effective results has wrought a revolution. Scientific attention has been given to their design and construction and it has been found that condensers can be made which will discharge the ammonia at a temperature within a very few degrees of the water used for cooling, and at the same time will keep the condenser pressure lower, both these results making for greater efficiency and being accomplished with less than half the amount of surface formerly required. Among the improvements which are radical departures from the old types is the double-pipe ammonia condenser, which has come into general use; but the latest development along this line is what is termed the flooded condenser, in which the hot ammonia discharged from the compressor comes in contact with liquid ammonia and is quickly condensed, resulting in a heating of the liquid ammonia. This heated liquid is then cooled by water in the usual way, but more easily, for here there is liquid on either side of the walls of the condensers, which makes possible a much more rapid transfer of heat for a given surface than would be possible where the ammonia is a gas. Many inventors and engineers have contributed to the success of the newer forms of condensers, notably, Westerlin and Campbell with the double-pipe apparatus and Louis Block and Thomas Shipley with the flooded type of condenser.

One of the important advances which have been made is in what is termed the flooded gravity system of feeding the ammonia. H. J. Krebs of Wilmington, Del., was granted patent No. 436,003, September 9, 1890, which seems to cover the present

flooded system. Krebs' patent involved the use of an accumulator placed above the evaporating coils. The level of the refrigerant in this accumulator was maintained automatically, and from this, with the aid of gravity or mechanical means, the coils were "flooded". The discharge from the evaporating coils entered the top of the accumulator, where any entrained, unevaporated refrigerant was separated from the vaporized part before the latter was allowed to return to the compressor or absorber. Increased capacity of the evaporating coils was claimed to be secured by this system.

By the use of this accumulator, with the addition of a valve on the suction line, Krebs was able to maintain a higher pressure in the evaporating coils than existed in the suction line. This feature enabled the operation of different coils at different pressures and temperatures while all were connected to the same machine. This system, although old, has only lately been revived, and while proving very efficient under certain conditions, requires still considerable scientific and experimental work to be done upon it.

Primarily, this method is based on the fact that the colder the gas the greater its density, so that after the ammonia has been converted into a gas in the evaporator, it is desirable to get it to the compressor as near the temperature at which it was converted as possible; the greater weight of ammonia thus handled by the compressor, for a given displacement, more than offsetting the small gain that might be had from superheating the gas on its way to the compressor. It is possible with this method to keep the evaporator filled with liquid ammonia, allowing the more rapid flow of heat through the walls of the evaporator. This is especially true of ice or brine tanks where the liquid to be cooled is on one side and the boiling liquid ammonia on the other.

The shell type of brine coolers was the first to use this method; later its use with pipe coils as evaporator has become general. Very naturally there had to be developed along with this the various types of accumulators or separating tanks, so as to prevent the liquid returning to the compressor.

Combined in these accumulators is the principle of returning direct to the compressor that portion of the liquid ammonia

which is evaporated in cooling the liquid from the temperature of the condenser to that of the evaporator.

In the shell type of brine coolers this is easily effected, but in coil tanks there is required some way of having only that ammonia liquid which has been cooled to the evaporating temperature pass to the coils; and here is where the varied type of accumulators, as they are called, comes in. There are some, however, that consider it desirable to allow this gas generated in the cooling of the liquid to pass through the coils, on the theory that the liquid is thereby agitated in the coils and the net result is a gain.

In connection with these methods of handling the ammonia, the greater need has come for the use of thermometers, in order to determine, first, that the liquid ammonia is cooled as much as possible with the water available for cooling; secondly, to know that the gas coming from the evaporator is as little superheated as possible. The use of thermometers in refrigerating plants is on the increase, and justly so, for the whole process is one of heat transmission, which can only be properly considered when temperatures are known. It is axiomatic in all work in refrigeration that as much of the work as possible be done by natural means, before applying mechanical. This is well evidenced in the cooling of the distilled water to as near the temperature of the water available for cooling as possible, which means much in the way of saving of mechanical refrigeration.

The demand for the manufacture of ice where forms of power other than steam engines are available, brought about by the decreased cost of power through the use of internal combustion engines or electric motors, used in connection with ammonia or carbonic acid compression machines, has introduced a great variety of methods for the manufacture of ice. The plate system, one of the earliest methods of making ice, has been greatly improved and made more efficient; and other systems, such as "center freeze", Holden's process of compressing into block ice, shavings cut from revolving drums on which ice has been frozen, and the Patten vacuum system, making opaque ice, have been introduced and experimented with on a large scale.

The greatest development, however, has been in the manufacture of first class merchantable ice in cans from raw or undistilled water. This is now an accomplished fact, and while there are a great variety of methods, the general characteristic is that the water in process of freezing is kept in agitation by means of air discharged into it, or kept in motion by mechanical agitation. This has made it necessary to solve many problems connected with the water itself. Certain impurities affect the ice made in this way to such an extent that these impurities, usually in the form of solubles, must first be removed.

A patent was issued August 6, 1901, to Edgar J. Ullrich of Colorado Springs, Colo., for an attachment to an ice can for the purpose of supplying compressed air or gas at the base of the can to produce circulation in the water in the can during the process of freezing. This appears to be the first patent issued covering this method. Other patents have since been issued, covering various systems or parts of apparatus for the production of crystal ice in cans from raw water, to Simon, Berryman, Parsons, Pownall, Beale, Shipley, Jewell, Fisher, Pharo, Maginnis and others.

Greater efficiency has been attained by the distilled-water plants, also, through more economical steam engines and the use of multiple-effect evaporators. Today it is possible to produce a uniform quality of product at a reduced cost.

Large brine tanks with coils therein for refrigeration uses other than ice making have been largely superseded by the use of brine coolers either of the shell type or the double-pipe type, and in many instances ice tanks have been and are being constructed without coils, wherein the brine is cooled by such brine coolers frequently placed in the ice-making tank.

Street pipe-line systems of refrigeration, which at one time bade fair to become important factors in the production and distribution of refrigeration, seem to have encountered so many difficulties that little has been done in this direction during recent years. At the present time there are only two large installations of this kind—one at St. Louis, Mo., operating on the ammonia direct-expansion system, and one in Boston, Mass., using brine as a circulating medium. There are, how-

ever, a number of short pipe-line systems in connection with ice-making and cold storage, operating with more or less success.

The small machine has come to be a factor and has reached a degree of perfection that makes it possible for any one who has daily use for from a half a ton refrigeration up to secure an equipment that can be economically and successfully handled. Many thousands are now in use.

The domestic machine, as it is called in counter-distinction to the small machine, has received a vast amount of attention, but the problems confronting the use of such a machine are enormous; and while many of them have been solved, it cannot as yet be considered a commercial success for use in the average-sized family. There are, however, some half dozen of machines designed for domestic use which have reached that degree of perfection where their further development will be watched with much interest.

Our engineers have taken up the question of ventilation and air purification in connection with refrigeration, and the improvements shown in cold storage and brewery installations testify to the value of the work they are doing. Air conditioning, as it is called, is more and more becoming a factor in human existence, as by means of refrigeration it is possible to obtain a humidity control which is so essential in certain lines of work and especially in buildings where people congregate. Refrigeration has been successfully used for cooling rooms in hospitals, banks, hotels, business houses, factories, theaters and churches.

Some of the best engineering talent has been engaged for a number of years in developing suitable insulation for cold-storage houses, so as to minimize heat leakage into chilled spaces and to perfect material that would withstand moisture, lessen the fire hazard and not cost more than the limits of economic operation would warrant. Likewise, in order to avoid losses in the refrigerating apparatus, piping, etc., insulation of liquid and suction lines, of brine coolers and brine pipes, of freezing tanks, water storage tanks, accumulators, receivers, etc., has been almost universally applied. Insulation, as an economic necessity wherein refrigeration is applied, has shown

marked improvement, both on the scientific and practical sides, during the past twenty-five years.

The scope and usefulness of refrigeration as applied to transportation of perishable fruits have been greatly extended by the development of precooling. As pomologist for the United States Department of Agriculture, G. Harold Powell, about 1905, conducted experiments in California on precooling of fruits, which were so successful as to fully establish the value of this method. Since then large precooling stations have been erected at Roseville, San Bernardino and Colton, Calif., also in Texas and other southern States. One of these California plants alone is able to precool at one time 32 car loads of fruit in three or four hours.

Precooling, as is well known, consists in reducing the temperature of the fruit or product to be transported before shipment is begun. Two methods are in use—one, cooling the goods in a warehouse before placing them in refrigerator cars, and the other, cooling the goods after they have been placed in the car, by circulating cold air. The fruit that has been precooled not only arrives at its destination in better condition, but it is not necessary to re-ice the refrigerator cars as often, thus saving time and expense in transit. Experiments with an aim to adapting precooling to a wider range of fruits, vegetables and other perishable foods are being conducted at the present time. Precooling has also made it possible to ship to much greater distances and thus greatly extend the market for many small fruits, such as grapes, cherries, red raspberries and other highly perishable fruits.

A brief survey of the province of refrigeration in industry and the magnitude of the refrigerating industry may not be without interest. Mechanical refrigeration has invaded, or is being utilized in, almost every department of human industry. In the "Ice and Refrigeration Blue Book" are listed about 140 separate industries in which refrigerating machinery is employed. It need only be mentioned that it has entirely superseded the whole natural-ice product in the ice supply in all southern States and is rapidly displacing it in northern States. Thus, at the present time, fully 60% of all the ice supply of Greater New York is manufactured ice, and in Boston, Maine

and Canada, manufactured ice is being introduced in increasing quantity.

Cold storage has revolutionized market conditions in all perishable foods, conserving the surplus of harvests, providing a remunerative market all the year round and thus stimulating production, and giving to all consumers a full variety of foods at all times of the year, regardless of seasons of production.

There are now approximately 1000 general cold-storage warehouses in the United States, having cold storage space of about 250,000,000 cubic feet. If to this be added the cold storage rooms in packing houses and breweries, the figures will become, with 650 packing houses and 1200 breweries, approximately 3000 cold stores, and artificially cooled space of at least 400,000,000 cubic feet. Then if to this be added the cold storage rooms of creameries, produce merchants and apple storers, at least 2000 more must be added, and the number of cold stores will reach at least 5000 and the cooled space approximately 500,000,000 cubic feet; and that still would not include the cold storage refrigerators in some 3000 meat markets, 600 or 700 ice cream factories, 1000 hotels, 400 restaurants, 200 club houses, 400 hospitals, 500 confectioneries and bakeries, 300 department and general stores, 300 groceries, 300 public buildings, asylums, prisons, etc., 200 fish-handling plants, not to mention artificially-cooled departments in chemical laboratories, powder factories, government posts, etc. The value of the products kept from spoiling by refrigeration in these more than 12,000 refrigerated places has never been estimated, but it must be enormous.

The effect of utilization of refrigeration upon consumption, production and prices has been phenomenal and offers a striking example of the benefits derived from the introduction of mechanical refrigeration. Thus, for example, statistics presented at the U. S. Senate Committee Hearings in 1911 showed that in New York City the average yearly per capita consumption of eggs during the decade 1880-1890, with no cold storage, was 265. During 1900-1910, with ample cold storage, it was 318. According to data compiled by the U. S. Bureau of Statistics, the per capita consumption of eggs in the seven leading cities of the United States was 396 in 1900, when cold storage first came into general use, while in 1913 it had already risen

to 492 per capita. Still more significant is the fact that while increased consumption would naturally lead to advance in price and while prices for other food products did advance, as everyone knows, the price of eggs has not advanced, the average wholesale price per dozen in New York City during the decade 1880-1890 (no cold storage) was 26¾ cents during November, December and January and 15¼ cents during April, May and June; for 1900-1910, when cold storage was general, the average price in April, May and June was 17½ cents; in November, December and January, 21¾ cents for 8/10ths of the eggs and 29¼ cents for fresh gathered, which numbered not over 2/10ths of the total, so that the average wholesale price for the year was actually lower after the advent of cold storage than before. A similar showing is apparent in butter statistics. Although per capita receipts have decreased since the advent of cold storage, the average wholesale price for first quality butter was 8¼ cents less during the winter season in the decade 1900-1910 than in the decade 1880-1890, and during the summer only 1¾ cents higher, as shown in official statistics published in "Ice and Refrigeration Blue Book". The latest statistics compiled indicate that at present approximately 30,000 refrigerating machines are in operation in the United States, representing an investment of approximately $350,000,000 and directly affecting products valued at over $3,000,000,000.

The economy gained through conservation by refrigeration of what was once wasted, and the added production made possible by cold storage of the seasonable surplus, have been of very much greater benefit than is ordinarily understood. When, for instance, it is considered how hundreds of millions of pounds of fresh meats are conserved by refrigeration, so that fresh meat is obtainable at uniform prices and quality all the year round, and, likewise, many million pounds of fresh fish; that abundance of first-class butter at all seasons is made possible only through refrigeration, and that before its advent rancid butter was the rule rather than the exception during eight months of the year; that but for refrigeration the 35,000 carloads of citrus fruits from California and the 20,000 carloads from Florida, which give to all parts of the United States an abundance of oranges and grape fruit at all times, would be

impossible, and that the 5000 carloads of canteloupes shipped from the Imperial Valley of California alone this summer could not have been grown and marketed without refrigeration; that practically germ-free milk and certified pure milk for babies, which has had so great an effect upon the death rate and reduced sickness, would be impracticable without refrigeration and the refrigerating engineer; that the universal use of a variety of fresh foods all the year, made possible only by refrigeration, has added greatly to man's health, happiness and efficiency—when all these things are considered, when all the conservation by refrigeration is considered, and all the added production because of the great widening of markets for perishable products is taken into account, it will be found that it is a conservative estimate to state that mechanical refrigeration serves to add at least one-half billion dollars to the wealth of the people of the United States each year, besides adding enormously to their comfort and convenience.

Many industries have appealed for help in obtaining "temperatures below the normal for useful purposes", which is in part the definition of the field of the refrigerating engineer as enunciated by the first president of the American Society of Refrigerating Engineers—Mr. John E. Starr. And they have not appealed in vain, for the engineer has been ready to solve the problems offered, and in some instances to anticipate them and call the attention of the manufacturer to the good that they might get from the use of refrigeration.

Think of there being in the photographic art a refrigerating capacity in one factory alone of over 3000 tons. And consider that refrigeration is now playing an important part in such diverse industries as silk manufacture, leather from hides to finished product, tobacco, dye stuffs, extracts, electrical apparatus, explosives, floriculture, horticulture, glues and gelatin, mercerizing, petroleum, perfumes, rubber, shaft sinking, blast furnaces, automobile factories, laundries, paper manufacturing, the textile industry, and many others.

The wonder is that in so short a time so much has been accomplished. Twenty-five years ago who could have, in the wildest flight of imagination, conceived of such a development for refrigeration?

DISCUSSION

Mr. George B. Stacy* said that it might be of interest to know that the pioneer mentioned, Mr. John M. Beath, who built the plant in San Francisco, is living here today, and at his advanced age is still making experiments with refrigeration machinery. Mr. Stacy.

Mr. W. P. Stevens† said that it might also be of interest to know of the recent decease of Professor Lowe of Los Angeles, who obtained a patent in the late 50's and had machines in operation before the Civil War. It was of interest to know that a man with his many interests had been one of the earliest in the ice machine business. Mr. Stevens.

Mr. Stevens noted further, referring to the flooded system, that this reverts back to Mr. E. F. Osborne of Chicago, a prominent engineer, who recently passed away. A year ago on looking through some old drawings, he had seen those for plants which had been erected in Sioux City, Iowa, and in Fredonia, Kansas, and also one in Chicago, in 1886, 1888 and 1899. They were installed on direct expansion systems and also on absorption machines. The design also included a so-called dehydrator and an ejector. The condenser was about the same as that which the York Company is using at the present time. The drawings were brought by Mr. Osborne from France, where he had made extensive researches in 1881 or 1882.

He also called attention to the first pipe-line system in Los Angeles, which, he believed, covers more area than any other pipe-line system in the United States; that is, it extends farther from the central plant and is doing more refrigerating than any other pipe-line plant.

Mr. C. M. Gay,** continuing in reference to the plant built by Mr. Osborne in Fredonia, Kansas, stated that it had been his privilege to purchase and rebuild that plant. He had thus had personal knowledge of the construction of the plant from start to finish, and as Mr. Stevens had stated, it had some of the flooded features of today. It was, however, different in detail, and would hardly be regarded as a fully flooded system. Mr. Gay.

Mr. T. O. Vilter,‡ Chairman, referring to the accumulator system, said that the Krebs patent, to which Mr. Nickerson had referred, is the original patent, but it was never in use commercially—it was only used in laboratory and experimental work, and the first accumulator known to him was made by Herman Rassbach in Brooklyn. He (Rassbach) had an old cylinder discarded from an hydraulic elevator, into which was fitted a coil. The ammonia which was cooled in this accumulator was then fed into the bottom of an upright which fed to the plate ice tank. The return suction from the ice-tank header came about half-way be- Mr. Vilter.

* York-Cal. Construction Co., San Francisco, Calif.

† Los Angeles, Calif.

** The Vilter Mfg. Co., Los Angeles, Calif.

‡ The Vilter Mfg. Co., Milwaukee, Wis.

Mr. Vilter. tween the top and bottom of the accumulator. There are now many different types of construction for accumulators. Some use gravity feed while others use the accumulator with its coil for cooling and then feed it through cocks to the lower header.

Mr. Rassbach obtained a patent on the gravity feed, which proved especially useful in the plate ice system, where the first coils were being thawed off, ready for harvesting the ice, while the next coils had eleven-inch accretions, the next nine-inch, the next seven-inch, the next six-inch, the next four and the next just starting to freeze. Under such conditions some coils required more liquid ammonia than others, and this accumulator was for the purpose of giving to each coil the amount required for doing the work.

Paper No. 228

REFRIGERATION IN SWEDEN.

By

THOR ANDERSSON, Ph. D.
Secretary of the Swedish Society for Refrigeration Technics
Stockholm, Sweden

On account of the climatic conditions in Sweden, a great part of the country is, for the greater part of the year, not considered to have extensive need of refrigeration, or to require any special development of refrigeration technology. In Sweden we have for a long time exclusively employed the procedure of primitive peoples for the protection of articles in need of cold storage, particularly articles of food easily spoilt. In this procedure, such articles are interred in the ground, and thus nature's own refrigerating resources—ice and snow—are utilized.

During the sixties of the last century, energetic efforts began to be made to spread a knowledge of rational methods of dairying among the farmers. The Academy of Agriculture and the Agricultural Societies were at the head of the movement, and a rapid development was soon noticeable. One thing that contributed to this, in a very great degree, was the introduction of the ice method, invented by I. G. Swartz—born in Norrköping, 1819, died 1865—about the middle of the decade in question, and according to which the creaming was performed in high, cylindrical or oval vessels immersed in ice water. This method rendered it possible to carry on the dairy industry on a large scale. During the seventies this method prevailed almost exclusively, but is now retained only at an inconsiderable number of dairies. The ice method was employed not only in Sweden, but also in Denmark, Norway, Finland, Germany, Austria, etc.

The brewing industry, which stands pre-eminent among the industries of mankind in respect to the number of most important scientific investigations to which it has given rise, has, in

Sweden also, introduced the technics of mechanical refrigeration. In about 1890, The Ludwigsberg Works, Ltd., which since 1880 had manufactured the necessary machines for the brewing industry, which is of high standing in Sweden, began to attempt to supply the breweries' need for apparatus for refrigeration. Thereby the technics of refrigeration were introduced into Sweden. When, in the beginning of this century, the different municipalities began to establish public abattoirs, the Ludwigsberg Works developed a large field of activity in regard to abattoirs, which, together with the brewing industry, is in Sweden, as well as in many other countries, the most important for the mechanical refrigeration industry. In Sweden the railroad is, until now, the third branch in which the technics of refrigeration are employed on a large scale.

In regard to construction, the Swedish refrigeration practice is of the highest standing in modern technics. The Swedish mechanical refrigeration industry has built a number of refrigeration establishments outside of the boundaries of its own country, especially in Russia and Finland. Not long ago the most important works in Sweden, the Ludwigsberg in Stockholm, successfully competed in Argentina with German and United States' establishments for refrigeration industries.

In the mechanical refrigeration industry, the Ludwigsberg Works have, for the last two years, been busily engaged with improvements in design and detail. Very recently their work has been concentrated on the production of automatic regulating arrangements for the refrigerating medium, and they have applied for a patent.

Especially since the founding of the Swedish Society for Refrigeration Technics in 1911, energetic efforts have been made in Sweden to employ refrigeration in as many different directions as possible. In the Swedish industries in all branches which might be expected to require it, refrigeration is already being employed.

The Swedish refrigeration technics have even been employed for purposes to which probably, until now, not much attention has been paid. In the municipal gas works, refrigeration has been employed for the refrigeration of coal-gas for the production of benzol. The universally known Gas Accumulator Co.

Ltd. has also begun to employ refrigeration in order to simplify and hasten the filling of the gas accumulators. Formerly, the filling of the accumulators, with an outer temperature of + 30° C. or more, took three days, which now can be done in one. The two last mentioned refrigeration installations were constructed and carried out by the Ludwigsberg Works.

The Swedish refrigeration industry has also been active in the production of explosives, in a manner which deserves special mention.

During recent years the Frigator System has been used in Sweden. This system is a rational application of the most primitive method of cooling, i. e., lowering the temperature of iced water by the addition of ordinary salt. The salt is dissolved in water and this solution passes over the ice. The cold water thus obtained is used in exactly the same manner as the salt solution employed in ordinary refrigerators. The real aim of the Frigator System is not to compete with the mechanical appliances for refrigeration on a large scale, but to render possible the cooling of smaller buildings, such as restaurants, schools, offices, fish stores, farms, dwelling houses, etc.

The Frigator System, patented in most countries, invented by a Swede, has found a special application to railway refrigerator cars.

Paper No. 229

REFRIGERATION IN FRANCE.

By

L. MARCHIS
Professor in the Faculty of Sciences of Paris
Paris, France

CHAPTER I.

THE TECHNIQUE OF VERY LOW TEMPERATURES.

The industrial production of liquid air, of oxygen, of nitrogen and of hydrogen, have, thanks to the labors of Mons. G. Claude, made great progress during the last few years. We shall here give in résumé the more important results of the researches of our compatriot.

1. Production of Liquid Air.

M. Claude utilizes the external work produced by the passage of air from a high to a lower pressure, but he applies in the following manner this well known method for the production of low temperatures.

The air, compressed to a maximum pressure of 40 atmospheres, passes into a cooler where its temperature is reduced, as we shall see at a later point.

This current of air, cooled and compressed to 40 atmospheres, is then to be passed into a cylinder where work is produced by expansive action on a piston. But before reaching this expansion cylinder, a part of the air is diverted from the main conduit. This diverted air, at a pressure of 40 atmospheres, reaches a cooled inclosure (liquefier) where the air is liquefied at the temperature of — 140° C. The remainder of the air (from which the portion has been diverted) then passes on to undergo an expansion by stages in a series of cylinders within which are pistons on which the air acts with the production of work.

The air, exhausted after the first expansion, is circulated about a first liquefier traversed by the diverted air (referred to above) at 40 atmospheres pressure. This air, which has undergone a first expansion, is warmed and then expanded in a second auxiliary cylinder. The air of the second expansion is sent into a second liquefier similar to the first.

Finally this air, twice expanded, is caused to circulate in the cooler where it operates as a cooling agent for the air compressed to 40 atmospheres which comes from the compressor.

For machines using a compressor of 75 horsepower, the delivery of liquid air is equal to 0.85 liter (0.224 gals.) per effective horsepower hour.

2. Separation of the Oxygen and Nitrogen of the Air.

Liquid air is especially important because it tends to become the only industrial source of oxygen and of nitrogen. The production, at a low price, of these two gases is a problem, the solution of which is of great importance for metallurgy and for the fertilizer industry. How may these two gases be derived from liquid air? This problem we shall now proceed to examine.

Oxygen and nitrogen are two substances of which the critical points are distinctly different, as follows:

— 119° C and 51 atmospheres for oxygen
— 146° C and 34 atmospheres for nitrogen

If, in the plane *P O T* (*O P* ordinates: *O T* abscissae) we trace the curve of vapor tension for the saturated vapors of oxygen and of nitrogen, it will be found that the curve for nitrogen will lie above that for oxygen. At the same temperature, lying below the critical temperature, nitrogen is liquefied under a pressure higher than oxygen; at the same pressure, inferior to the critical pressure of the two gases, nitrogen is liquefied at a temperature lower than oxygen. Thus under atmospheric pressure oxygen is liquefied at — 182.6° C and nitrogen at — 194.4° C.

3. Special Circumstances Presented by the Liquefaction of Air (Mixture of Oxygen and Nitrogen).

The liquefaction of air, that is of the mixture of the two gases oxygen and nitrogen, presents certain special conditions which we must here note.

If, at a constant temperature T, sufficiently low, air is compressed in a closed chamber, the following phenomena are observed:

(1) At a determinate value P_o of the pressure, there appears the first drop of liquid; we shall designate the state of equilibrium characterised by the value P_o, T by the term "dewpoint".* For all pressures less than P_o, the air is in the state of homogeneous vapor; from P_o upward, separation of the air in two phases is produced.

(2) If, at the constant temperature T, the volume of the air is continuously decreased, the pressure rises; at the same time the amount of the liquid phase increases and the amount of the vapor phase decreases. If the increase in pressure is continued, the air passes entirely into the liquid state; the values P_1 and T of the pressure and of the temperature at this instant characterise what we shall term the boiling point.

For all pressures exceeding P_1, the air is in the state of homogeneous liquid; for all pressures comprised between P_o and P_1, the air is divided into two phases, one liquid and one vapor.

(3) The "dewpoints" and the "boiling points", obtained at diverse temperatures trace in the plane $P\ O\ T$ ($O\ P$, ordinates; $O\ T$, abscissae) on the one hand the line of dew and on the other the line of ebullition of the gaseous mixture considered.

The line of ebullition lies entirely above the line of dew; the two lines come together at the critical point, that is, in the present case, at the point for which the coördinates are 39 atmospheres and — 140° C.

(4) For each system of values (TP) of the temperature and of the pressure (T below the critical temperature and P lying between P_o and P_1), there exists a state of equilibrium of the combination of the two phases in contact one with the other. In this state, the compositions of the two phases are different.

(5) Let us apply the term "oxygen quality" of the phases, liquid and gaseous, to the percentage of oxygen (the more liquefiable element) in each of them.

* Note that this is entirely distinct from the dewpoint relating to water vapor and air. (Tr.)

The oxygen quality of the liquid phase is, in the state of equilibrium, always higher than that of the gaseous phase. The liquid is always richer in oxygen than the vapor.

When, at constant temperature the pressure rises, the oxygen qualities of the phases, liquid and gaseous, continuously decrease to the complete liquefaction of the mixture.

4. The Separation of Oxygen and Nitrogen Can Not Be Realized When, in the Liquefaction of Air, the Liquid and Gaseous Phases are Maintained in Contact.

Thus when air is liquefied (volumetric content 21% of oxygen) the first drop of liquid which is formed contains both oxygen and nitrogen and its "oxygen quality" is 47%. The values of the "oxygen quality" continuously decrease in proportion as the volume of the liquid phase increases: It is thus that liquid at 34% can only be in equilibrium with vapor at 12.5%. But, so long as a gaseous phase exists, its oxygen quality is very different from 0; it remains greater than 7%.

If the two phases, liquid and gaseous, obtained by the progressive liquefaction of air are maintained in contact, it is impossible to prepare gaseous nitrogen free of oxygen, that is with a sufficient degree of purity.

5. Distillation of Liquid Air Under Constant Pressure.

It is not the same, however, when, maintaining the pressure constant, the liquid phase is removed as rapidly as formed. In such case the phenomenon encountered is the inverse of that met with when liquid air is distilled under constant pressure. In this case the oxygen qualities of the phases, liquid and gaseous, continuously increase; these phases, separated one from the other as rapidly as formed, tend toward a content of pure oxygen; at the same time the temperature of ebullition rises from a value nearly that of pure nitrogen to the temperature of ebullition of pure oxygen.

6. Condensation of Air Under Constant Pressure with Elimination of the Liquid Phase.

Inversely, if, under constant pressure, air is progressively condensed, removing the liquid phase as rapidly as formed, liquids and gaseous residues are obtained less and less rich in oxygen; at the same time the temperature of condensation drops

and tends toward the temperature of ebullition of pure nitrogen under the pressure considered. There is thus obtained a gaseous mixture richer in nitrogen than that obtained by leaving the liquid and gaseous phases in contact.

However, in order to obtain a gaseous residue sensibly free of oxygen, it is necessary in this method to liquefy practically all of the air.

7. The Counter-flow Method of Mons. G. Claude.

A better result is realized by the use of the method designed by M. Claude under the name of regenerative or "counterflow".

Let us assume in any case the progressive condensation of the air and the removal of the liquid phase as rapidly as formed. But assume further that the liquid thus obtained meets, in separating from the gas, a gaseous mass richer in oxygen. The liquid is colder, as a consequence of the high percentage of nitrogen which it contains; a part of the more condensable oxygen of the gaseous mixture will then become liquid and will take the place of the nitrogen which is vaporized. Thus by a counter-flow circulation of the liquid and the gas of different oxygen qualities, there is obtained, on the one hand, a liquid very rich in oxygen and on the other, gaseous nitrogen practically pure. The latter comes, furthermore, in large part from air treated but not liquefied.

M. Claude has realized as follows the principle of the "counterflow".

A form of small tubular boiler is disposed in such manner that its axis is vertical. The tubes are surrounded on the outside by the liquid air. There is then passed into the inside at the bottom a current of cold compressed air. This in passing up through the tubes is progressively liquefied, producing both liquids and vapors less and less rich in oxygen. The vapors continue to rise toward the top of the tubes while the condensed liquid descends toward the bottom. This liquid, in falling into the lower receptacle, meets the gaseous portions rich in oxygen, and thus is produced the continuous exhaustion, of which the principle has been set forth above. There is thus liberated from the top of the nest of tubes practically pure nitrogen, while liquid specially rich in oxygen is continuously drawn from the bottom.

8. The Preparation of Pure Oxygen and of Nitrogen 97% or 98% Pure.

A second stage remains to be realized. Instead of air with an oxygen content (volumetric) of 47%, it is required to obtain oxygen practically pure. This is realized by means of methods of rectification based on those employed in the manufacture of alcohol.

In a vertical column there circulate: (1) From bottom to top, oxygen vapor practically pure; (2) from top to bottom, liquid with a high percentage of nitrogen. The latter, colder, condenses the oxygen and allows its nitrogen to escape in the gaseous condition, according to the procedure above developed in the description of the counter-flow method.

The apparatus is composed of a sort of tubular boiler with axis vertical. This is extended on top by a sheet-metal cylinder of the type employed in the distillation of alcohol. The vertical tubes of the boiler are surrounded by liquid oxygen practically pure. On the inside and at the base of the tubes, air is led in under a pressure of 5 atmospheres. As has been explained above, this air is liquefied, giving a liquid air with excess of oxygen in the lower part of the tubes and nearly pure gaseous nitrogen in the upper part. The latter is carried through the liquid oxygen and is liquefied in turn. In consequence of its pressure, the liquid with excess of oxygen flows out continuously at the middle part of the rectifying column, while the liquid nitrogen, very poor in oxygen, overflows at the top of the column. Furthermore, the oxygen which surrounds the boiler is vaporized, as a result of the disengagement of heat resulting from the condensation of the air in the interior of the tubes. This vapor of oxygen, in rising through the column, encounters liquids richer and richer in nitrogen. It is then condensed, taking the place of the nitrogen which is vaporized. Thus practically pure liquid oxygen falls back into the boiler, while pure nitrogen is liberated at the upper part of the rectifying column. The mass of liquid oxygen which falls back into the boiler is superior to that which is vaporized in rising through the column. The excess of oxygen is evacuated and carried through a cooler to the gasometer or point of utilization. This cooler serves to cool

the air at 5 atmospheres pressure which is introduced into the base of the apparatus.

The ensemble of this equipment (cooler, liquefier, rectifying column) is surrounded by a thick layer of heat insulating material which opposes the inflow of heat.

The delivery of this apparatus is approximately 1 cu. m. (35.3 cu. ft.) of pure oxygen per effective horsepower hour for the size producing 50 cu. m. (1765.7 cu. ft.) per hour; 1.2 cu. m. (42.4 cu. ft.) for the sizes producing 100 to 200 cu. m. (3530-7063 cu. ft.) per hour; 1.5 cu. m. (53 cu. ft.) for the sizes producing 1000 cu. m. (35,300 cu. ft.) per hour, operating at pressures of 10 atmospheres at the most. For these latter, aside from the motive power, the costs (labor and fixed charges) will not exceed 0.01 fr. per cubic meter of oxygen (0.005c per cubic foot). With the motive power available in the neighborhood of furnaces and waterfalls, the total cost of oxygen will result, according to M. Claude, about 0.02 fr. per cubic meter (0.010c per cu. ft.) or 15 fr. per ton (density of liquid oxygen 1.33) ($2.62 per ton of 2000 lbs.).

At the present time, the 40 plants which are operating with, the preceding apparatus (Liquid Air Company) are producing annually 24,000,000 cu. m. (847,000,000 cu. ft.) of liquid oxygen. Operating at the same time, they would furnish 3000 cu. m. (105,900 cu. ft.) of oxygen per hour while liquefying 40 tons of air per hour. The factory at Boulogne-sur-Seine operates with two units each of 150 cu. m. (5300 cu. ft.) capacity.

9. The Preparation of Nitrogen with 0.2% Oxygen.

Nitrogen with 2% or 3% of oxygen, the preparation of which we have just described, can not be employed in the manufacture of cyanamide.

In improving the method of rectification described above, M. Claude has succeeded in preparing nitrogen containing not more than 0.2% of oxygen (called nitrogen 99.8% pure).

The principal fault of the apparatus for the production of pure oxygen consists in its insufficient production of liquid nitrogen. The residual gases coming from the progressive condensation of the air do not find, in passing again through the bath of oxygen, a medium sufficiently cold to completely condense them, but in the rectifying column there may be found a part suf-

ficiently cold to secure the more complete liquefaction of the nitrogen resulting from the progressive liquefaction of the air. It is for this reason that in the new equipment constructed by M. Claude the residual gases coming from the progressive liquefaction of the air, instead of passing into the liquid oxygen, are conducted through a serpentine liquefier placed in a sufficiently cold region of the rectifying column. Nitrogen, liquefied in this region, is led to the upper part of the rectifying column and flows from above downward, meeting the vapors of oxygen coming from the bath which surrounds the lower liquefier.

At the present time, the Liquid Air Company, which is exploiting the processes of M. Claude, has in operation or under construction 18 units for pure nitrogen, each of 500 cu. m. (17,650 cu. ft.) capacity per hour. When they are all in operation at the same time, 3 tons of nitrogen per hour may be delivered.

10. The Preparation of Hydrogen.

Hydrogen is extracted from water gas. It is known that this gas contains on the average 50% of hydrogen and 40% of carbon monoxide. The separation of these gases is very readily made by the methods of M. Claude. However, the process has not as yet been carried to the point of industrial production. The Liquid Air Company is making experiments in this direction and is liquefying 150 to 200 kg. (330 to 440 lbs.) of carbon monoxide per hour. This substance may be employed mixed with oxygen to form an explosive mixture available as fuel in an internal combustion engine.

11. The Extraction of the Rare Gases in the Atmosphere.

The counter-flow method of M. Claude has made possible the extraction from atmospheric air of the rare gases, helium, neon, argon, krypton, and xenon. It secures, in fact, the possibility of gathering, as a by-product of the industrial manufacture of oxygen and of nitrogen, a mixture of nitrogen and at the least 50% of rare gases, and more particularly of neon and helium. To this end, the gaseous residues which are the most difficult of liquefaction are led, in the proportion of 6000 liters (1585 gals.) per hour for a delivery of air of 3500 cu. m. (123,500 cu. ft.), to the lower part of a tubular system cooled by liquid nitrogen. Under the simultaneous effect of the pres-

sure of 4 atmospheres and of the very low temperature, the condensation of all liquefiable substances results. The gaseous residue is constituted, if the delivery is properly regulated, of a mixture almost pure of neon and helium. An apparatus of a capacity of 50 cu. m. (1765 cu. ft.) oxygen per hour produces per day 100 liters (26.4 gals.) of neon or 30 cu. m. (1059.4 cu. ft.) per year.

Neon is now employed in tubes which light up with a rose color as a result of the passage of high voltage electricity. These lamps give approximately 200 candle power per running meter of tube and require about 0.6 watt-hour per candle power. By the introduction of a little mercury into the neon tubes, a beautiful blue light is obtained.

12. Liquid Oxygen Employed as an Explosive.

Liquid oxygen may serve as an explosive. Cartridges composed of ordinary lampblack, dipped for a few moments in a bucket filled with liquid oxygen and primed with a fulminate cap, constitute a formidable explosive, as powerful as gum dynamite and costing only 1/4 to 1/5 as much as the latter.

13. Production of Temperatures Down to —211 C by the Use of Liquid Nitrogen.

Hydrogen boils under atmospheric pressure at a temperature of —252.6°, but this substance is still difficult to procure in considerable quantity. M. Claude has indicated a simple method for obtaining in a few minutes a temperature of —211° when liquid nitrogen is available. This process is more convenient, more rapid and permits of operating with a restricted equipment, on quantities of liquid nitrogen greater than by means of evaporation under partial vacuum.

When there is passed into a liquefied gas a rapid current of air, the liquid is cooled very much below its normal point of ebullition.

The liquid nitrogen is placed in a Dewar-d'Arsonval tube freely open to the air. There is first passed in a rapid gaseous current of hydrogen, first cooled in liquid nitrogen. In the experiment, the rapidity of the current of hydrogen is gradually raised from 20 to 25 liters (5.3 to 6.3 gals.) per minute to 50 or 60 liters (13.2 to 15.85 gals.) per minute.

Under these conditions, a period of about 12 minutes is suf-

ficient in order to lower the temperature of the liquid nitrogen to — 210° C. From this point on, the temperature remains sensibly fixed. After 20 minutes, a temperature — 211° is reached; a limiting temperature corresponding to the slow congelation of nitrogen. There may be thus realized a fixed point in a manner quite as convenient as those of the boiling points of oxygen and of nitrogen.

One might employ the same general method with liquid oxygen, but in this case the limiting lower temperature would be — 204°. In order to obtain with this substance the same temperature by a reduction of pressure, it would be necessary to boil it under 50 mm. (1.9685 in.) of mercury.

14. Recovery of Volatile Liquids. Method of M. Claude.

In several important industries (artificial silk of Chardonnet; smokeless powder; celluloid, etc.) costly liquids are frequently lost (alcohol and ether in particular) under the form of vapors diluted in enormous masses of air. Often, even in spite of a very considerable recovery, these losses in certain establishments may reach millions of francs per year.

M. Claude has proposed for this recovery a method which presents analogies with those which we have previously noted.

I—Air charged with water vapor and with vapors of alcohol and ether is compressed to a pressure such that it is sensibly saturated with water vapor at the temperature which it possesses at the end of compression, and in consequence, such that it will be saturated with water vapor after reaching its ordinary temperature. To realize this result, a pressure of 4 to 6 atmospheres is practically sufficient.

II—The compressed air is cooled in a refrigerator using water. As a result of its super-saturation with regard to the vapor of water, the latter condenses, carrying with it a little alcohol and other vapors, notably vapors of camphor (celluloid industry).

III—The compressed air, relieved of the larger part of its vapor of water, is then carried to the "recoverer". This is a sort of vertical tubular boiler. The compressed air rises from the bottom to the top through the interior of the bundle of tubes. A counter current of cooled air arrives on top of the "recoverer" and circulates from above downward around the bundle of tubes.

The compressed air, in rising, meets with air colder and colder. On entering the bundle of tubes, the compressed air condenses out a mixture of water and alcohol. As this mixture can only be solidified at a temperature considerably below zero, there is no danger of an obstruction of the tubes by the solidification of the water. In proportion as the compressed air rises in the bundle of tubes, it deposits mixtures of water richer and richer in alcohol and in ether, that is to say, less and less readily congealed. These mixtures, flowing from above downward in the bundle of tubes, come into contact with regions continuously warmer. The danger of obstruction by ice is then less and less to be feared.

When the compressed air first arrives at the top of the "recoverer", or transformer, it may be subject to a temperature as low as — 90° C, a temperature at which the maximum tension of the vapor of ether is less than 0.5 mm. (0.0197 in.), but which is insufficient to congeal it. The collection of vapors accumulates in the liquid state in the lower receptacle, while the compressed air escapes from the top of the apparatus completely deprived of its vapors.

IV—This compressed air, exhausted of its vapors and cooled, is then carried to the cylinder of an engine where it expands with the production of work. This expansion produces a further marked reduction of temperature in the air. It is this air, at a temperature of — 120° to — 130°, which, passed from above downward in the apparatus as a counter current in opposite direction to the compressed air, determines the program of descending temperature of which we have just analyzed the consequences.

V—It is preferable in the apparatus to push the refrigeration to the point where alcohol alone is separated. The ether is then in the way of separation disseminated in the air in the form of small globules. Carried along by the current of air from the bundle of tubes, it is then separated mechanically by its passage through a separator provided with pierced baffles.

VI—The following is a method of operation of the apparatus with regard to the production of low temperatures:

At the beginning, all parts of the apparatus being at the same temperature, there is at first in the compressor a warming of the air and a disengagement of heat which is absorbed by

the circulating water. The compressed air enters the bundle of tubes in the apparatus at ordinary temperature, whence it flows out sensibly at the same temperature. The temperature of this air then becomes lowered in the expansion prime mover. This expanded air returns, chilled, into the shell of the apparatus; there it is warmed before escaping, but it cools the compressed air traversing the tubes. This air then enters the expansion prime mover at a reduced temperature, whence it issues, still colder and with capacity for still further cooling of the compressed air in the bundle of tubes, and so on from one round to another with reducing temperatures.

About one-half hour is required for the realization of the condensation.

With large units, where the initial compression need not exceed 4 kg. per sq. cm. (56.89 lbs. per sq. in.), as much as 16 cu. m. (565 cu. ft.) of air may be treated per horsepower hour.

The Lyons Celluloid Company has made in its Oyonnax factory an installation for treating 200 cu. m. (7063 cu. ft.) of air coming from the laminators and dryers of celluloid. This air, aside from water vapor, is charged with vapors of camphor, alcohol and ether. The apparatus driven by a 25-horsepower, 3-phase motor, giving an initial compression of 5 atmospheres, secures the recovery each 24 hours of 150 kg. (330 lbs.) of alcohol, 80 kg. (176 lbs.) of ether, and 15 kg. (33 lbs.) of camphor. In the expansion prime mover the temperatures are:

At admission	—60° C
At exhaust	—110° C

There is no danger of explosion. A warm explosive mixture with dry air and ether is not produced until the proportion of ether reaches 50 to 60 grammes per cu. m. (0.0031-0.0037 lbs. per cu. ft.), but in these cases the mixture contains vapor of water and about 20 grammes of ether per cu. m. (0.0012 lbs. per cu. ft.). Furthermore, the mixture is cooled in issuing from the compressor.

CHAPTER II.

HEAT INSULATORS.

Fourier's theory of the conduction of heat leads to the following propositions:

(1.) If a substance has two indefinite plane parallel faces, the quantity of heat which, under steady conditions, flows across a surface S from one of these faces to the other is given by the expression:

$$Q = k\,S\,\frac{T_1 - T_2}{l}\,t \qquad (1)$$

where Q = quantity of heat
S = area
l = distance between the two surfaces
T_1, T_2 = temperatures of the two faces
t = time
k = coefficient of internal conduction of heat for the substance.

(2.) Let us consider two media exterior to the substance under consideration and touching the limiting surfaces of this substance. In these media let us trace two surfaces parallel to the limiting surfaces of the substance and indefinitely near to them. Let us call Θ_1 and Θ_2 the temperatures on these surfaces of the media which are in contact with the limiting surfaces of the substance under examination. If we consider a surface S on these planes at temperatures Θ_1 and Θ_2, we may, as soon as steady conditions are established, write the following relations:

$$Q = a_1\,S\,(\Theta_1 - T_1)\,t = k\,S\,\frac{T_1 - T_2}{l}\,t = a_2\,S\,(T_2 - \Theta_2)\,t \qquad (2)$$

$$\left.\begin{aligned} \Theta_1 - T_1 &= \frac{Q}{St} \times \frac{1}{a_1} \\ T_1 - T_2 &= \frac{Q}{St} \times \frac{l}{k} \\ T_2 - \Theta_2 &= \frac{Q}{St} \times \frac{1}{a_2} \end{aligned}\right\} \qquad (3)$$

Whence adding and solving for Q we find

$$Q = K\,S\,(\Theta_1 - \Theta_2)\,t \qquad (4)$$

in which

$$\frac{1}{K} = \frac{1}{a_1} + \frac{1}{a_2} + \frac{l}{k} \qquad (5)$$

K is the coefficient of transmission of heat from one of the media at temperature Θ_1, to the other at temperature Θ_2 through

the substance of thickness l. It is a coefficient of special importance in the refrigerating industry.

M. Biquard, of the Conservatoire des Arts et Métiers, at Paris, has studied the various factors on which this coefficient depends.

He gives to the coefficient $\left(\frac{1}{a_1}+\frac{1}{a_2}\right)$ the name "insulating value" due to the limiting surfaces. If the two surfaces are the same,

$$a_1 = a_2 \text{ and}$$
$$\frac{1}{a_1}+\frac{1}{a_2}=\frac{2}{a}$$

To the coefficient $\frac{1}{K}$, M. Biquard gives the name overall insulating value.

It is of interest to examine the influence of the limiting surface of the substance. This influence is only negligible when the values of $\frac{1}{K}$ are greater than 4. In this case the insulating value of the surfaces is scarcely 5% of the overall value. The latter becomes then, in such case, proportional to the thickness of the substance, the coefficient of proportionality being the reciprocal of the coefficient of internal conduction for the substance.

(3.) The experimental determination of this last coefficient is then of very great importance. M. Biquard has made his determinations in realizing, as far as possible, the conditions of Fourier's definition.

To this end he employs the method known in experimental physics under the name of the "guard-ring method".

Let us suppose that in a large plate of insulating substance (flat with parallel faces), we isolate, in thought, a cylinder of section S situated at a great distance from the boundaries of the plate. Let us assume that, without changing anything in the mode of propagation of heat in the ensemble, we measure the quantity which, under steady conditions, passes from one of these faces to the other of the cylinder of section S. Everything will happen as though the substance studied had indefinite parallel faces. The propagation of heat in the cylinder of section S will not be modified by the presence of the boundaries. In this manner, in the experiment, the conditions of the theory will have been realized. The part of the substance which surrounds the

cylinder of section S is the guard ring. The breadth of the latter outside the cylinder of section S should be equal to about twice the diameter of this section.

M. Biquard has realized these conditions in the following manner:

The insulating substance under examination is placed between two plates of copper maintained, one at $0°C$ by melting ice, the other at a temperature constant and definitely determined by means of a current of water. The ice is placed in two chambers separated by an insulating partition; one of these chambers corresponds to the cylinder of section S; the other to the guard ring. The plate of copper which is in contact with the ice, shows, furthermore a groove limiting the cylinder of section S. The quantity of ice melted in a given time in the chamber which corresponds to the section S is then measured.

Following are certain results found by M. Biquard:

(1) The smallest coefficient of internal conduction [0.034 meter, calories—kilog. hour, per deg. cent. (0.023 foot, B.t.u., hour, per deg. Fah.)] seems to be that of Javanese kapock packed to weigh 15.7 kg. per cu. m. (0.97 lbs. per cu. ft.).

(2) The coefficient of internal conduction of a heat insulator increases considerably when it has absorbed humidity. If one takes, for example, granulated cork mixed with tar, its coefficient of internal conduction equals 0.052 when the substance is dry (packed to weigh 275 kg. per cu. m. (17.1 lbs. per cu. ft.). This coefficient becomes equal to 0.076 after a period of 20 days soaking in water, as a result of which the cork takes up 310 kg. of water per cu. m. (19.3 lbs. per cu. ft.) by way of absorption.

(3) Insulators with intervals of air can only be employed when the latter can be maintained dry and the air quiet. In such case the most suitable thickness for the layers of air is comprised between 8 and 25 mm. (0.315 to 0.984 ins.). If such layers of air are employed, it is indispensable to reduce to a minimum the thicknesses of solid matter, in directions both parallel and perpendicular to the walls.

From this viewpoint, the "fibrous cement" which, under a thickness of a few millimeters, presents a satisfactory mechanical strength, seems likely to give good results.

CHAPTER III.

REFRIGERATING MACHINES.

1 Capacity and Performance.

M. Marchis proposes the following definitions relating to the capacity and performance of refrigerating machines.

(a) Interior Regime. It is first necessary to consider, in the operation of refrigerating machines, the interior regime and the exterior regime.

The interior regime depends not only on the nature of the refrigerating fluid in use, but also on all the transformations of this fluid in the interior of the machine. It is difficult, not to say impossible, to define in any exact manner, the various stages of these transformations. And for this reason, by analogy with the case of an ideal engine operating according to the Carnot cycle, we are led to characterise the internal regime of a compressor by means of the three following temperatures.

1—Temperature of vaporization of the refrigerating agent, corresponding to the pressure measured on the inlet gage.

T_v = Temperature, absolute.
t_v = Temperature, Cent.
$T_v = t_v + 273$

2—Temperature of condensation of the refrigerating fluid, corresponding to the pressure measured at the exhaust gage.

T_c = Temperature, absolute.
t_c = Temperature, Cent.
$T_c = t_c + 273$

When the refrigerating fluid operates at temperatures above the critical temperature, the serpentine of the liquefier plays the role of a cooler of the gas. For the latter, one can only define an average temperature, somewhat vaguely known. If by means of thermometers plunged into the gas, measures are taken, $t_c^{(1)}$ and $t_c^{(2)}$, of this gas at admission and discharge from the serpentine of the liquefier, we may take as the average temperature of the gas in the serpentine the mean value

$$t_c = \frac{t_c^{(1)} + t_c^{(2)}}{2}$$

3—Temperature of the refrigerating fluid on its arrival at the regulating valve, temperature measured by means of a thermometer plunged in the fluid.

T_r = Temperature, absolute.
t_r = Temperature, Cent.
$T_r = t_r + 273$

This temperature is the lower, the better the cooler for the liquid.

The difference between the two temperatures, T_r-T_v, characterises the effect of the regulating valve.

4—Industrial experience shows that the values of the temperatures t_v, t_c, t_r most commonly observed are the following:

$t_v = -10°$ C	$T_v = 263°$ abs.
$t_c = +25°$ C	$T_c = 298°$ abs.
$t_r = +15°$ C	$T_r = 288°$ abs.

We propose to take these temperatures as suited to define the normal internal regime.

(b) External Regime. The study of the internal regime of the machine involves that of the transformations of the refrigerating fluid. That of the external regime concerns the interchanges of heat between the refrigerating fluid and the mobile media, that to be cooled about the evaporator, and that for cooling about the liquefier. The external regime is of more especial interest in the refrigerating industry. It permits, in effect, the standardization of the refrigerating action of the machine (useful effect) and of determining the expense of circulating water in the liquefier. The external regime may be characterized by the following temperatures:

1—Average temperature of the substance to be cooled in contact with the evaporator.

θ_v = temperature Cent. corresponding to t_v

If $\theta_v^{(1)}$ and $\theta_v^{(2)}$ are the temperatures of the substance to be cooled, before and after contact with the evaporator, we may take

$$\theta_v = \frac{\theta_v^{(1)} + \theta_v^{(2)}}{2}$$

2—Temperature of the condensing water at admission to the liquefier (whether or not the liquefier is provided with a cooler for the liquid)

θ_{ce} = temperature Cent.

3—Temperature of the condensing water as it issues from the liquefier

θ_{cs} = temperature Cent.

4—We propose to adopt, for the normal conditions of operation for the external regime, the following values of the temperatures:

For the cooling of brine:

$$\theta_v = -5^\circ \text{ C}$$
$$\theta_v - t_v = 5^\circ \text{ C}$$

In case of direct expansion

$$\theta_v = 0^\circ \text{ C}$$
$$\theta_v - t_v = 10^\circ$$
$$\theta_{ce} = +12^\circ \text{ C} \quad \theta_{cs} = +20^\circ \text{ C}$$
$$\frac{\theta_{ce} + \theta_{cs}}{2} = 16$$
$$t_c - \frac{\theta_{ce} + \theta_{cs}}{2} = 9$$
$$\frac{t_c + t_r}{2} - \frac{\theta_{ce} + \theta_{cs}}{2} = 4$$

(c) Certain Definitions and Notations Relating to the Calculation of Compressors.

1—Units of refrigeration produced in the evaporator per stroke of the piston=Q_v

$$Q_v = M\, r\ (T_v)$$

M = mass of refrigerating fluid circulating in the machine per stroke of the piston.

$r\ (T_v)$ = heat of vaporization of the refrigerating fluid at the temperature T_v.

$V = MS\ (T_v)$ = volume swept by piston.

$S\ (T_v)$ = specific volume of the saturated vapor of the refrigerating fluid at the temperature T_v.

We propose to give the name Theoretical specific volumetric production to the expression

$$P_{sv}{}^{(t)} = \frac{r\ (T_v)}{s\ (T_v)} \left(\frac{\text{units of refrigeration-kilograms}}{\text{met}^3} \right)$$

2—Theoretical indicated work per stroke of piston,

$$W_i = \frac{m}{m-1} P_v V \left[\left(\frac{P_c}{P_v} \right)^{\frac{m-1}{m}} - 1 \right]$$

where

P_c = pressure at the liquefier indicated by the corresponding gage.

P_v = pressure at the evaporator corresponding to the temperature T_v.

If the pressures are expressed in kg. per square meter and the volumes in cubic meters, the work W_t is expressed in kg-meters (if in pounds per square foot and cubic feet, work is expressed in foot-pounds).

If the pressures are expressed in Newtons per sq. m. and the volumes in cu. m. the work W_t is expressed in Joules.

We propose to give the name Theoretical specific economic production to the expression

$$P_{se}^{(t)} = \frac{P_{sv}^{(t)}}{\frac{W_t}{v}} \left(\frac{\text{units of refrigeration-kg.}}{\text{Kg. meter or Joule}} \right)$$

If the work W_t is expressed in Joules and if $K_{wh}^{(t)}$ is the corresponding number of watt-hours, we have

$$K_{wh}^{(t)} = \frac{W_t}{36 \times 10^5}$$

$$P_{se}^{(t)} = \frac{1}{36 \times 10^5} \times \frac{P_{sv}^{(t)}}{\frac{K_{wh}^{(t)}}{V}}$$

Let us place

$$\Pi_{se}^{(t)} = 36 \times 10^5 P_{se}^{(t)}$$

We then have

$$\Pi_{se}^{(t)} = \frac{P_{sv}^{(t)}}{\frac{K_{wh}^{(t)}}{V}} \left(\frac{\text{units of refrigeration-kg.}}{\text{Kilowatt-hour}} \right)$$

The factor m which enters into the expression for W_t is not well known. The values commonly assumed are as follows:

$N H_3$ ..... $m = 1.32$
$S O_2$ ..... $m = 1.27$
CO_2 ..... $m = 1.30$

3—We propose to give the name Indicated thermal performance to the abstract number

$$\rho_t = E \; P_{sc}^{(t)} = 36 \times 10^5 \times \Pi_{se}$$

E being the mechanical equivalent of heat.

Where the unit of work is the Joule and the unit of mass is the kilogram, $E = 9.8 \times 425$.

4—The theoretical refrigerating power of a compressor per unit of volume swept by the piston or the theoretical volumetric refrigerating power may be represented by the notation

$$P_{fv}^{(t)} \left(\frac{\text{Units of refrigeration-hour}}{\text{cu. meter}} \right)$$

If n is the number of revolutions per minute we have

For a single-acting machine:

$$P_{fv}^{(t)} = 60 \times n \times P_{sv}^{(t)}$$

For a double-acting machine:

$$P_{fv}^{(t)} = 120 \times n \times P_{sv}^{(t)}$$

5—The theoretical cooling power of the condenser per unit of volume swept by the piston, or theoretical volumetric cooling power may be represented by the notation

$$R_{cv}^{(t)} \ \frac{\text{(Calories-kg.)}}{\text{cu. m.}}$$

In virtue of the principle of equivalence, it has for expression

$$R_{cv}^{(t)} = P_{sv}^{(t)}\left(1 + \frac{1}{E} \times \frac{1}{P_{se}^{(t)}}\right)$$

6—The theoretical consumption of water at the condenser per unit volume swept by the piston or theoretical volumetric consumption of water is

$$\Delta_{ev}^{(t)} \ \frac{\text{Kg.}}{\text{cu. m.}}$$

It has for value the expression

$$\Delta_{ev}^{(t)} = \frac{R_{cv}^{(t)}}{\theta_{cs} - \theta_{ce}}.$$

The theoretical calculation of a compressor is then based on the knowledge of $P_{sv}^{(t)}$ and of $P_{se}^{(t)}$

(d) Certain Definitions and Notations Relative to Compressors in Industrial Operation.

1—We propose to give the name Practical specific volumetric production to the quotient:

$$\frac{\text{Frigories-kg.}}{\text{cu. m.}} \ P_{sv}^{(p)} = \frac{\text{Units of refrigeration produced in the evaporator by the vaporization of the refrigerating fluid.}}{\text{Volume in cubic meters actually swept by the piston.}}$$

If, as is usually done, we measure the units of refrigeration produced in the evaporator by the cooling of the external medium, this method assumes that the efficiency of the evaporator (ratio of the units of refrigeration actually produced in the evaporator to the units measured by determining the cooling of the external medium) is very near unity; that is, that the evaporator is well filled with refrigerating fluid.

If this method of procedure is not followed, it is necessary to measure the mass of fluid circulating in the machine during a determined time, and this is very difficult to realize to a sufficiently accurate degree.

The practical volumetric refrigerating power,

$$P_{fv}{}^{(p)} \frac{\text{Units of refrigeration-hour}}{\text{cu. m.}}$$

has for value the expression:

For a single-acting machine

$$P_{fv}{}^{(p)} = 60 \times n \times P_{sv}{}^{(p)}$$

For a double-acting machine

$$P_{fv}{}^{(p)} = 120 \times n \times P_{sv}{}^{(p)}$$

These expressions assume that $P_{sv}{}^{(p)}$ corresponds to one stroke of the piston.

2—We propose to give the name Volumetric efficiency of a compressor to the ratio

$$\rho_v = \frac{P_{sv}{}^{(p)}}{P_{sv}{}^{(t)}}$$

As the number of units of refrigeration really produced in the evaporator has for value the expression $Mr\ (T_v)$, this efficiency is also equal to the ratio of the actual to the theoretical volume of the compressor.

3—We propose to give the name Practical specific economic production (related to the indicated kilowatt-hours) to the ratio

$$\Pi_{se}{}^{(p)} = \frac{\text{Units of refrigeration produced in the evaporator by the vaporization of the refrigerating fluid.}}{\text{Number of indicated kilowatt-hours furnished to the compressor.}}$$

This definition must be completed by an indication of the mechanical efficiency of the compressor, ρm or ratio of the number of kilowatt-hours actually delivered on the compressor shaft to the number furnished to it.

The practical specific economic production (related to the kilowatt-hours expended on the compressor shaft) has for value the expression:

$$\Pi_{se}{}^{(p)} \times \rho_m$$

4—We propose to give the name economic efficiency of the compressor to the ratio:

$$\rho_e = \frac{\Pi_{se}{}^{(p)}}{\Pi_{se}{}^{(t)}}$$

This number measures also the ratio of the indicated kilowatt-hours actually furnished to the compressor to the theoretical indicated kilowatt-hours.

5—The practical volumetric refrigerating power of the liquefier is

$$R_{cv}{}^{(p)} = P_{sv}{}^{(p)}\left(1 + \frac{36 \times 10^5}{E} \times \frac{1}{\Pi_{se}{}^{(p)}}\right)$$

When $E = 9.8 \times 425$

$$R_{cv}{}^{(p)} = P_{sv}{}^{(p)}\left(1 + 863.3\,\frac{1}{\Pi_{se}{}^{(p)}}\right)$$

6—The practical volumetric consumption of water is

$$\Delta_{cv}{}^{(p)} = \frac{R_{cv}{}^{(p)}}{\theta_{cs} - \theta_{ce}}$$

2 The Construction of Refrigeration Machines in France.

As is shown by the statistical table annexed hereto, the refrigerating capacity of the machines in operation in France attains, for fixed installations, at least 74 million frigorie-hours (units of refrigeration). A great number of these machines are built in France—at least 60% of the preceding capacity.

If we consider the nature of the refrigerating fluid, the machines built in France fall into five types

(1) Ammonia
(2) Sulphur dioxide
(3) Carbon dioxide
(4) Methyl chloride
(5) Water under partial vacuum

The first four classes of machine are of the so-called compression type. Machines of the absorption type are no longer built in France. There are only a few now in operation in ice plants.

Methyl chloride is only used in the Douane machines; this medium is moreover not employed in other countries.

Furthermore, the type using water under partial vacuum is peculiar to the Westinghouse Co., which builds it under the direction of its inventor, M. Maurice Leblanc. We shall refer to this machine at a later point.

The ammonia machine is built especially by:

(1) The Société des Moteurs á Gaz et d'Industrie Mécanique (formerly Fixary).

(2) The Société Delaunay-Belleville.

The compressors of the first company are developed from the Linde type. They realize the greatest refrigerating capacities at present obtained. Thus, for example, this company has now under construction for use in connection with the driving of mine shafts compressors of 330,000 units of refrigeration (165,000 units per cylinder) formed of two cylinders opposed and mounted on the same foundation.

The Delaunay-Belleville Co., builds compressors with flat bed-plate and with valves placed at the sides (axes of valves normal to axis of cylinders).

These compressors, double-acting, operate at rotative speeds not exceeding 150 revolutions per minute.

Recently a single-acting compressor under the name "Equator" has been proposed, with a rotative speed of 500 r.p.m. At a certain point in the stroke the piston uncovers certain openings by which enter the gases coming from the evaporator. As to the exhaust valves, they are formed of simple bars of steel placed over the openings connecting with the condenser. This compressor, still under test, has given good results.

Machines operating with sulphur dioxide are more numerous than those with ammonia, but their total refrigerating capacity is less than that of the ammonia machines.

The Pictet Co. is one of the oldest houses building machines operating with sulphur dioxide. The present type shows a cylinder with jacket for water circulation and a double stuffing-box for the circulation of water, which assures the cooling of the piston rod. In order to realize high rotative speeds (up to 300 r.p.m.), use is made of valves formed of a light disk held at the center.

The house Lepeu also builds machines operating with sulphur dioxide, with very light disk valves for high rotative speeds.

A type of compressor altogether peculiar to France is the Audiffren-Singrün. It has neither stuffing-box nor valves. The compressor is imprisoned in a hermetically sealed inclosure, on the interior of which acts the pressure of the liquefier. The compressor may be operated by an external motor without piercing the wall of the space which contains it, that is to say, without employing a stuffing-box. To this end it is sufficient to revolve the

closed compartment containing the compressor. The mechanism of the latter, to which is given an alternating movement, is maintained fixed in space by means of a mass of lead of sufficient weight, which ballasts the shell containing the pump of the compressor. This machine is especially used for the manufacture of ice in small quantities for domestic use, yielding 3 to 4 kg. (6.6 to 8.8 lbs.) per hour. For such purpose it is furthermore very practical, for it requires no supervision and can be put into operation by any domestic. However, larger machines are now in hand, capable of making 50 and 100 kg. (110 and 220 lbs.) of ice per hour. We shall refer at a later point to a traveling installation in which this type of compressor has yielded the best of results.

The house Dyle and Bacalan builds compressors operating with carbon dioxide, of the English type "Hall". This house has more particularly specialized in the construction of machines for small dairies and for marine uses.

The Froid Industriel Co. also builds machines using carbon dioxide for marine service.

M. Maurice Leblanc, of the Westinghouse Co., has brought into service a machine in which water is used as the refrigerating fluid. It produces the cooling of brine by inducing its evaporation under a suitable reduction of pressure. This partial vacuum is realized by means of a jet of vapor, which, issuing at high speed from an orifice surrounded by a suitable diffuser, entrains large quantities of water vapor.

However, in order to obtain in the evaporator a temperature of the brine sufficiently low, that is a sufficiently low tension of the vapor emitted by the solution, it is necessary to realize at the condenser of the vapor a very low pressure. This is realized by the use of an ejector-condenser, that is, a condenser in which the vacuum pump is constituted by a liquid ejector.

This machine presents the advantage of having neither poppet valves nor check valves subject to rapid wear. It is also very silent.

An important saving is realized by the use in the vapor ejectors of exhaust vapor from other vapor motors, as turbines for example. Thus at the refrigerating abattoir at Chasseneuil (Poitou), the exhaust from a steam turbine under a pressure of

2 kg. per sq. cm. (28.4 lbs. per sq. in.) passes into the ejectors and produces in the evaporator a vacuum of 2 mm. (0.08 in.) of mercury.

The efficiency of an ejector machine is the ratio of the number of units of refrigeration produced in the evaporator to the number of heat units absorbed by the refrigerating water in the condenser. If consideration is given to the temperatures corresponding to the tensions of the vapor of water in the evaporator and the condenser, the efficiency diminishes rapidly when the difference of these temperatures increases. It has a value about 30% for a difference of temperature equal to 15° or 20° C, that is, a temperature of 5° to 0° C in the evaporator for a temperature of + 20° C in the condenser.

For this reason, the ejector machine is well suited to use in all cases where it is not necessary to push the refrigerating effect below 0° C. Such is the case in chemical and pharmaceutical industries. The largest installation of this type has a machine of 1,050,000 frigorie-hours (units of refrigeration) with a temperature of the brine on entering the evaporator = + 26° C and on leaving the evaporator = + 19° C. This machine was installed at the plant of MM. Gillet at Lyon-Serin for cooling bichloride of tin, used in the process of dyeing black silk.

But it is on shipboard that ejector machines may find their most significant field of use. They employ a refrigerating fluid which involves no danger of fire and which can be renewed with sea water. Likewise, ejector machines serving to cool to a few degrees below 0° C the air circulating in ammunition rooms have been installed on a large number of French battleships, and even on Russian and Austrian ships of the same type. Machines of this type have also been employed for the refrigeration of food stores for passengers on four steamers of the French merchant marine. The total number of machines installed on shipboard is 58, with an aggregate refrigerating capacity of 2,000,000 frigorie-hours (units of refrigeration).

The ejector machine presents the serious drawback of requiring at the condenser a considerable amount of cooling water.

On this account, for stationary installations, M. Leblanc has undertaken the construction of a pump mechanically operated, and capable, with a small volume, of aspirating the enormous

volumes of water vapor required by the use of this substance as the refrigerating fluid. To this end he has turned to the rotative type of pump.

But the problem presents serious difficulties. The rotary compressor must be of small dimensions; it must require only a small power for operation and must, nevertheless, be capable of aspirating several cubic meters per second of a vapor of density much less than that of air. But, the less the density of the aspirated air, the greater must be the peripheral velocity of the vanes; the more the power absorbed by the compressor is reduced, the more must the angular velocity be increased.

Suppose that we have such a turbo-compressor formed of four rings of vanes of decreasing diameter in series, of which the largest has a diameter of 320 mm. (12.6 in.). The peripheral speed which the large wheel must realize being 500 meters (1640.4 ft.) per sec., the rotor must turn at a speed of 30,000 r.p.m. A mass weighing 1 gramme (0.0022 lb.) placed on the periphery of the large wheel would be subject to a centrifugal force of 160 kg. (352 lbs.).

In order to construct vanes able to resist forces of this magnitude, while at the same time sufficiently light, M. Leblanc has employed threads of ramie stretched parallel and consolidated by dissolved cellulose.

It is further necessary that the shaft and the rings of fiber vanes (constituting the rotor) be balanced in such manner that the axis of figure shall coincide with the principal axis of inertia. M. Leblanc has achieved this by the use of automatic equilibrators constituted by the use of hollow tori partially filled with mercury. Further the rotor is carried on very light bearings, themselves resting on springs very supple and of small mass.

A compressor of this type is still under experimental development. So far as known, it has not yet been introduced into practical use.

CHAPTER IV.

THE APPLICATIONS OF REFRIGERATION.

1 The Traveling Refrigerating Plant of the French Association du Froid.

The French *Association du Froid* has developed the plan of a traveling refrigerating plant in order to demonstrate on the spot, to agriculturists, the advantages which may be realized by the use of refrigeration. To this end it has built, with the aid of various French manufacturers, a special car constituting a veritable traveling refrigerating plant, which it proposes to locate, for the time, in various regions of France.

This car is divided, by transverse partitions, into three compartments. In the center a room for the machinery and at each end a refrigerator room.

The room for the machinery is 2.48 m. by 2.39 m. by 2.28 m. high (8.15 ft. x 7.85 ft. x 7.5 ft. high) at the center, and 1.96 m. (6.4 ft.) high at the sides. Ventilation is assured by means of the door placed at the center of the car, and by a movable shutter in the wall opposite the door.

The two cold rooms are of different dimensions. One, called the refrigerator room, measures 2.25 m. by 2.27 m. (7.35 ft. by 7.45 ft.); the other, called the freezing room, measures 2 m. by 2.27 m. (6.56 ft. by 7.45 ft.). Both have a height of 1.8 m. (5.9 ft.). Access to these rooms is obtained by way of two doors constructed in the partition opposite to that in which is located the door of the machinery room.

The refrigerating machine is of the Audiffren-Singrün type, with a capacity of 1500 frigorie-hours. It is driven by an explosion motor of 4 hp. running at 400 r.p.m. and using benzol as fuel. The tank of brine in which is plunged the refrigerating shell of the machine is provided with a distributing header. The circulation of the brine is furthermore realized by means of a pump.

The insulation of all the walls of the car has been made with especial care. It has been planned with a view of reducing the loss of heat to an amount not exceeding 0.5 calorie per sq. meter per hour (0.184 B.t.u. per sq. ft. per hr.).

This insulation is made up as follows:

Outer walls of car—from interior to exterior.

Wood	15 mm. (0.59 in.)
One thickness of insulating paper	
Wood	15 mm. (0.59 in.)
One thickness of insulating paper	
Cork in sheets	40 mm. (1.58 in.)
Wood	25 mm. (0.99 in.)
Cork in sheets	50 mm. (1.97 in.)
One thickness of insulating paper	
Cork in sheets	50 mm. (1.97 in.)
One thickness of paper and wood	20 mm. (0.79 in.)

Partitions separating the refrigerator rooms from the machinery room.

Wood	15 mm. (0.59 in.)
One thickness of insulating paper	
Cork in sheets	120 mm. (4.73 in.)
One thickness of insulating paper	
Wood	15 mm. (0.59 in.)

Floor—from interior to exterior.

Two thicknesses of boards of 20 mm., each laid with broken joints	40 mm. (1.58 in.)
One thickness of insulating paper	
Cork in sheets	100 mm. (3.94 in.)
One thickness of insulating paper	
Wood	20 mm. (0.79 in.)

Ceiling of car.

Wood	25 mm. (0.99 in.)
Covering on inside	
Cork	100 mm. (3.94 in.)
One layer of insulting paper	
Wood	20 mm. (0.79 in.)
Covering on outside	
Cork	50 mm. (1.97 in.)
Wood	15 mm. (0.59 in.)
One thickness of felt	
One layer sheeting soaked in bitumen.	

The cooling of each of the two rooms may be effected either by the circulation of brine, or by the circulation of cold air, or by both methods together. It is, in fact, necessary to make, between $-10°$ C. and $+10°$ C., the various demonstrations regarding the products which may be preserved by refrigeration —such as meat, fish, fruit, flowers, vegetables, butter, eggs, etc.

The brine (solution of chloride of calcium) is sent into holders, three of which are placed in each room. Each of these

is made up of 9 tubes of 10 cm. (3.94 in.) diam., and 1.60 m. (63 in.) long. There is therefore in each refrigerator room about 350 liters (92.4 gals.) of brine.

Furthermore, in the upper part of each room is arranged a space 36 cm. (14.2 in.) high by 1.6 m. (63 in.) wide separated from the rest of the room by a partition composed of two thicknesses of board with 60 mm. (2.36 in.) of sheet cork between them. This space contains the refrigerator coils. The air is sent over these refrigerating coils through an exhaust conduit, circulates in the refrigerator room and is drawn out through other conduits by means of the ventilator. The air conduits which traverse the machinery room are made of two thicknesses of wood separated by a layer of insulating paper.

All piping which carries brine to the containers and to the refrigerating coils is insulated with consolidated cork chips 40 mm. (1.58 in.) in thickness.

Experiments were commenced with this traveling plant, but unfortunately they have been interrupted by the war. Nevertheless, the results thus far obtained show that this manner of demonstration will, in the future, be of great service.

2 Refrigeration in the Wine Industry.

Among the applications of refrigeration, one which, in France, in recent years, has attracted especially the attention of savants, is the treatment of wines by low temperatures.

The second French Congress of Refrigeration, held at Toulouse in Sept., 1912, at the suggestion of the French Society of Refrigerating Engineers, decided on the formation of a sub-committee on the applications of refrigeration in the wine industry. It is charged with the duty of grouping, in the principal grape growing regions of France, chemists, proprietors, dealers, and growers who might be disposed to interest themselves in the various applications of refrigeration for the treatments of musts, of wines, brandies, liqueurs, ciders and aperitifs with a wine base.

Even before the constitution of this sub-committee, reports on various important investigations regarding this question had been published by M. Dr. Carles of Bordeaux and by M. Mathieu, Director of the Oenological Station of Bourgoyne. The purpose of the new committee was to group the results of these various

investigators and to give definite scientific indications regarding the effects of refrigeration in the wine industry.

The Committee of the South West installed at Bordeaux, has already made known a certain number of results which we give here in résumé.

It has long been known that, subjected in winter to the prolonged action of cold (without going to congelation), new wine undergoes more rapidly a spontaneous normal purification. This effects a number of constituents such as the least stable part of the color, the nitrogeneous and mucilaginous matters, organic and mineral salts. It is known also that the precipitation of cream of tartar forms the most important of the deposits, and that it produces a corresponding reduction in the acid content which, joined to the loss of the tannoïdal substances, results in a diminution of the rough taste of new wines. To this improvement in the taste must be added the arrest of ferments due to anaerobic bacteria which are almost always present in new wines, an arrest which favors their ulterior elimination and, in consequence, the normal preservation of the wine.

In short, wine subjected to cold is refined more rapidly and may, in consequence, be presented to the trade after a shorter period of ripening.

Those results of the action of cold were, until quite recently, empirical. There had been scarcely any systematic attempt to scientifically study their production and control.

The experiments made by the Bordeaux Committee, although limited to a small number of wines, enable us to say that the principal advantages attributed to natural cold may also be realized by means of artificial refrigeration.

The application has been made in two ways.

1 Rapid Refrigeration and Short Period of Application of Cold.

The wine is rapidly cooled to a temperature of — 5° C., first in a receptacle cooled by wine already cold, then by circulation around a serpentine filled with a refrigerating fluid. This cold wine remains then about a week in vats of 50 hectoliters (1320.8 gals.) insulated thermally and cooled inside by a coil carrying a current of refrigerating fluid.

2 Slow and Prolonged Refrigeration in Rooms Kept at Temperatures About 0° C and —3° C.

Casks are introduced into the cold rooms in a storehouse and left there during a considerable time (in the actual case about four months).

The results obtained by these methods indicate that the treatment by rapid refrigeration gives less favorable results than the prolonged treatment in cold rooms.

However, the treatment lasting four months constitutes scarcely an economic treatment. Further experiments should be undertaken in order to see if the maximum effect may not be obtained at the end of shorter period of time. Furthermore, the present experiments have not made it possible to discriminate between the temperature 0° C. and —3° C. Further experiments should be made to elucidate this new question.

DISCUSSION

Mr. Nickerson.

Mr. J. F. Nickerson* desired to call attention to one interesting feature of the paper; that is, the development by the French Association of Refrigeration of a traveling refrigerating plant to use for demonstration purposes. In that country the private association instead of the Government had undertaken this work. In this country it happens to be the reverse. The U. S. Department of Agriculture has had in use for some five or six years a refrigerator car, which has been used for demonstration purposes and also in a commercial way.

Early experiments were carried out on the pre-cooling of fruits in cars, and these ideas developed until finally an experimental demonstration car, somewhat along the same line as that described in the paper, was specially designed and built under the direction of the engineers of the Department of Agriculture, and has now been in use for some years.

* Editor, Ice and Refrigeration, Chicago, Ill.

	NATURE OF
I	Abatt
II	Whole
III	Meat
IV	Brewe
V	Port
VI	Chood
VII	Confe
VIII	Disti
IX	Cold
X	Stora
XI	Ice H
XII	Venti
XIII	Chees
XIV	Cold
XV	Hotel
XVI	Chemi
XVII	Horti
XVIII	Labor
XIX	Milk
XX	Morgu
XXI	Sanat
XXII	Wine

I	Ammon
II	Refri
III	Refri

Paper No. 230

SOME OBSERVATIONS ON THE EXTENT AND VALUE OF FARM POWER EQUIPMENT.

By

PHILIP S. ROSE
Associate Editor, the American Thresherman and Farm Power
Madison, Wis., U. S. A.

When one travels about over this country and sees the great factories and mammoth power stations that furnish power to our manufacturing industries, he is apt to conclude that the power used in manufacturing exceeds that used in all other industries. But such a conclusion would be wrong. There is actually more power used on the farms than in all other industries combined, and the sum invested in farm power exceeds that invested in all other power in this country.

Horses and mules are the farmer's principal source of power. There was a time when oxen were used, but that time has long since passed. In the early days, when the country was poorer, and when agriculture was less highly developed, they were a factor, but at present they are a negligible quantity. Farmers found it cheaper to use horses, even though they are more expensive because of their greater activity. Here is a fact worthy of serious consideration in the contemplation of the possible change to mechanical power.

The last government Census of 1910 showed that there are a total of 24,042,882 horses and mules on the farms of the United States. Estimates of the Department of Agriculture, on January 1, 1914, placed the number at 25,411,000. If we assume that eighty per cent of these animals are mature, there are now available for farm work purposes 20,328,800 work animals. On the basis that each animal will develop an average of seven-tenths of a horse power, we find that the total available animal power amounts to 14,230,000 horse power expressed in mechan-

ical units, or almost exactly three-fourths as much power as was employed in all branches of manufacturing as shown by the 1910 census.

The total value placed on these animals by the officials of the Department of Agriculture, on January 1, 1914, was $2,842,655,000. The value of the harnesses and equipment for the mature animals, on the basis of ten dollars each, amounted to $203,200,000, making a total investment in animal power of $3,045,855,000. This investment, large as it is, does not include barns and stable equipment. Based on a total of 14,230,000 available horse power, the investment per actual horse power amounts to $214.05. This is a much higher rate than in the most elaborate manufacturing plants equipped with all modern improvements. For example, Gebhart in his "Steam Power Plant Engineering" on page 711 presents the following figures on the initial cost and operation of steam plants up to 80 horse power that are considerably cheaper than horses. As a rule, the larger the plant the cheaper the horse power cost:

TABLE I.

Size of Plant—Horse Power	20	40	60	80
Cost of plant per hp.	$200.00	$190.00	$180.00	$175.00
Fixed charges at 14%.....	28.00	26.60	25.20	24.50
Coal per hp. hour in lbs.	12.00	10.00	9.00	8.00
Cost at $4.00 per ton.....	66.00	55.00	49.50	44.00
Attendance, 10-hour basis....	30.00	20.00	15.00	13.00
Oil, waste and supplies.....	6.00	4.10	3.00	2.60

It might be supposed, with such an enormous investment in work animals, that the farmers were heavily over-stocked or that many more animals are being used than good business conditions would warrant. This hardly seems to be the case, however, when we examine the facts extending back over a number of decades. In 1870, there were 20.3 acres of improved land for each horse and mule in the farmers' hands. During the next ten years, the number of work animals failed to keep pace with the development of the country, for at that time we find there were 23.4 acres for each animal. From then on, horses increased faster than the increased acreage, as will be seen by referring to Chart I. In 1900, there were only 19.2 acres of land

per horse. During the last fourteen years, the increase in the number of horses and mules has kept very close step with the development of our arable lands.

Chart II shows the amount of improved acreage in each decade since 1850, and Chart III shows the number of horses and mules at the end of each decade since 1870. It will be noted that the number of work animals has increased at about the same rate as the acreage during all that time. So far as the

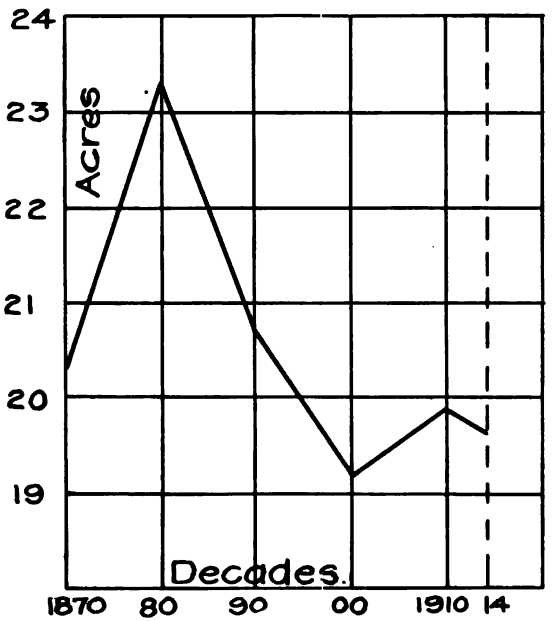

Chart I. Improved acreage for each work animal, by decades, since 1870. (U. S. Census)

amount of animal power to work our farm lands is concerned, the country has stood practically still. We are using practically the same number that our fathers used. The majority of farmers, even yet, depend upon one horse to do the plowing, prepare the land for the crop, do the seeding and cultivating, and finally the harvesting and hauling of the crop to market for each twenty acres of land. If the work could be spread out over all the year, the animals would not be overworked and the land

could be thoroughly tilled, but this is not possible. In our northern states, a horse works on an average only about three hours a day throughout the year, but in the busy season it works long hours, and even then the work is not always done

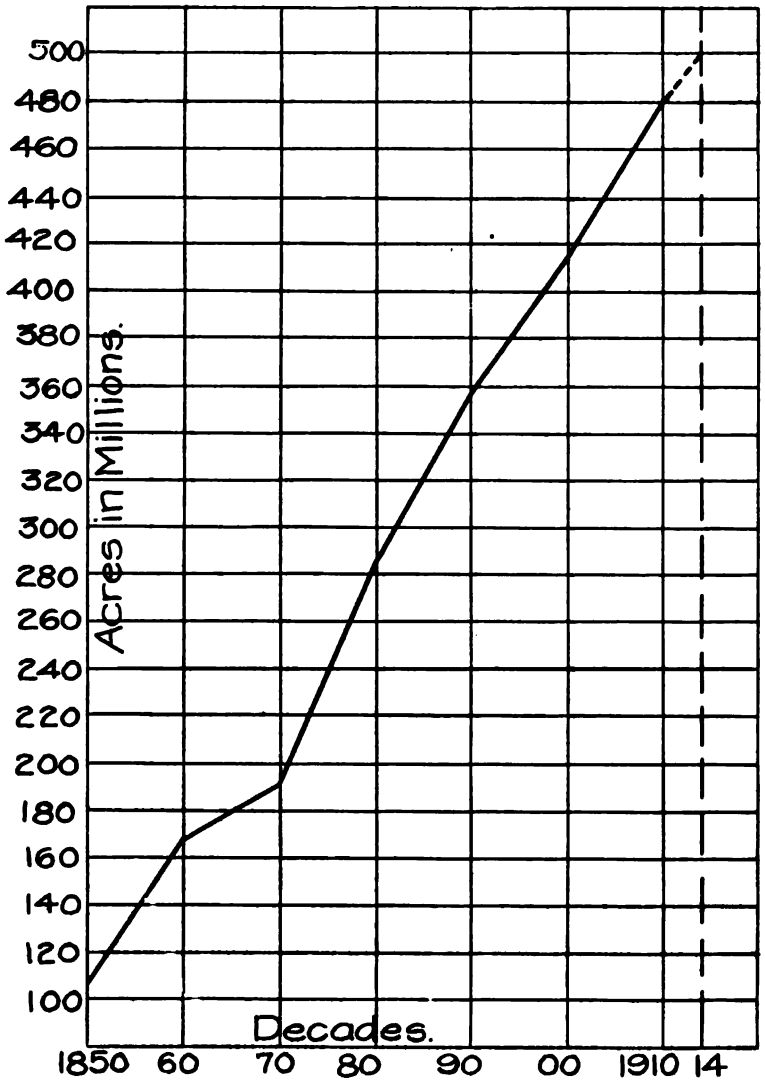

Chart II Improved acreage, by decades, since 1850.

as well as it should be. Farmers are obliged to do a great deal of spring plowing, and yet all agree that, for best returns, plowing should be done in late summer or early fall.

It would seem as though the number of work animals kept for farm work is not governed by the power necessary to do

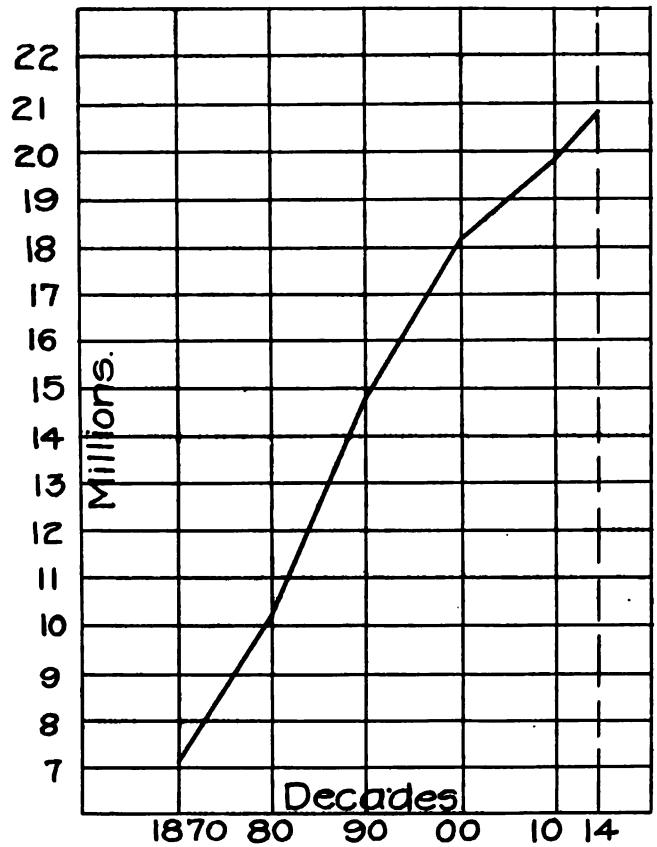

Chart III. Number of horses in the United States, by decades. (U. S. Census)

the work to best advantage, but rather by what the farmer can afford to keep and get the work done after a fashion. All authorities on tillage agree that the depth of plowing should be increased from the present average depth of four or five inches to eight or nine inches, and in some sections of the country,

deeper. Very few farm lands are plowed as deeply as they should be, and it is doubtful if the present animal equipment is equal to the task of cultivating the soil to the proper depth. The authority for this opinion is based on the following figures taken from some experimental work done by Professor Ocock on the draft of plows.

Ocock found in plowing prairie loam on an Illinois farm that had just raised a crop of corn and was, therefore, in good condition, that the draft of a fourteen-inch sulky plow at different depths was as follows:

TABLE II.

Depth of Furrow Inches	Draft in Pounds	Weight of Team Required in Pounds
4	275	2200
5	310	2480
6	360	2880
7	410	3280
8	450	3600

Professor J. A. Jeffries, formerly with the Michigan Agricultural College, states that the draft in clover sod ranges between 300 and 400 pounds and in blue grass sod from 400 to 700 pounds.

Dynamometer tests at the New Hampshire Agricultural Experiment Station give results as follows:

TABLE III.

Kind of Plow		Depth Inches	Width Inches	Draft Pounds
Ordinary	walking	7	14	450
"	"	6.5	14	427
"	"	8.5	14	637
"	"	7	12	412
"	"	7	17	475
"	" (no coulter)	7.5	14	549
"	" (new coulter)	7.5	14	495

It will thus be seen that Ocock's figures are very conservative.

The weight of team required is based on Professor King's statement that a horse is capable of hauling only one-eighth of

its weight continuously at a speed of two and a half miles for a period of eight hours. According to that basis of figuring, the power of an animal is directly proportional to its weight and, therefore, if we double the depth of plowing we must increase either the number of horses seventy per cent or, what is the same thing, increase the number of horses now on the farms of this country seventy per cent, with a corresponding increase in investment and cost of maintenance.

If it were only the initial investment we had to contend with, the problem would be comparatively easy to handle but, added to the initial investment, there must be taken into account the annual charge for maintenance. The magnitude of this charge is not very well realized by the majority of people.

The cost of keeping a horse (as given by the Bureau of Farm Management) on an Illinois farm in 1914, amounted to $82.50 annually. Thomas Cooper found that the cost on Minnesota farms in 1907 amounted to $65.23 on a large farm in the southeastern part of the State and to $90.40 on another large farm in the northern part of the State. Estimates by Professor E. P. Humbert, of New Mexico, placed the cost at $117.50. In some of the Eastern States the estimates ran as high as three hundred dollars annually and in some of the Western and Southern States, as low as fifty dollars. The average of estimates for the entire United States, by the professors of animal husbandry of our state colleges, amounts to $118.20.

These estimates all take into account interest on investment, depreciation, housing, shoeing, care, and veterinary charges, and are based on estimates for working animals. In any estimate covering all the animals of the country, the fact must not be lost sight of that the immature animals can be maintained much more cheaply and that in some sections of the country, notably in the South and in certain parts of the West the annual maintenance charge will fall below fifty dollars a year. In view of all the estimates given, it seems reasonable that the average maintenance charge for the entire country will amount to at least sixty dollars a year. Using this figure as a basis, we find the total maintenance cost for the work animals of the entire country amounts to $1,524,660,000 annually.

If, as our estimates show, there are 14,230,000 horse power

available, then the annual maintenance charge per horse power amounts to $107.14. If the increase in improved acreage has increased at the same rate during the last four years that it did during the decade from 1900 to 1910, there are now 500,000,000 acres of improved land in the United States and the investment in animal power amounts to six dollars an acre. The maintenance charge amounts to a tax of $3.08 per acre; or, figured on the total value of agricultural products for 1914, of $6,044,480,000, it required the products of 120,569,400 acres of land, or 25.2% of all our improved land, to feed and take care of the work animals.

Considering the amount of investment and the cost of maintenance, it does not seem as though the farmers could afford to increase their investment in this kind of power much more and make it profitable.

On the other hand, the experience of our best farmers and the teachings of scientific agriculturists all point to deeper plowing, more thorough tillage and the expenditure of more power on the soil, if we are to obtain larger crop yields. Also, and this is important in this connection, investigations by the Bureau of Farm Management on a large number of farms show that the small farm of less than 160 acres is an uneconomical unit, in view of the prices of farm labor and power. They show quite conclusively that large farms of from two hundred acres to a half-section give the best profits.

This brings us to a consideration of the size of power units and its influence on the cost of crop production. With the exception of the combined harvester, about the largest number of animals that can be used effectively in any farm work is the five-horse team drawing two plows. The size of the power unit is less than four horse power and there is required a man to operate it and a considerable amount of his time and energy must be spent in taking care of it—in feeding, currying, harnessing, etc. More generally, two or three work animals are used, and in many farm operations only one. The number of farm laborers required with such a power system is, therefore, necessarily very large and expensive. All things considered, the cost of farm labor is not far from two dollars a day. This makes the attendance charge per horse power unit excessively

high as compared with power used in manufacturing or in any other kind of work.

But what is of even more importance is the fact that work with animals can not always be carried on at the required rate of speed in the busy season, as for example, when the weather is very hot in mid-summer, or in the short preparatory season in early spring.

Experiments in early plowing in Kansas show that the yield of wheat is materially increased if the ground can be plowed immediately after harvest, but the weather is very hot at that season of the year, thus making it impossible to get the work

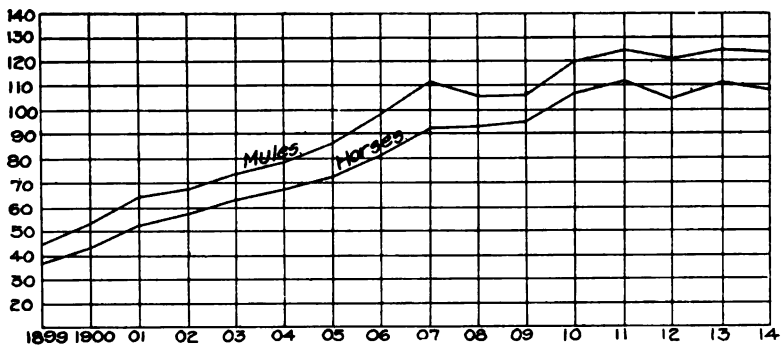

Chart IV. Average values of all horses and mules.

all done during the most favorable period. It is also found that in order to control insect pests to the best advantage, plowing in certain sections of the country must be performed within a very brief period and that, too, when the weather is unfavorable for the use of animal power.

The price of horses and mules has advanced year by year for a number of years, until today the cost of a good team of draft animals is four or five hundred dollars. Heavy drafters bring even higher prices. The trend of prices is shown in Charts IV and V. Chart IV gives the average prices since 1899 and Chart V the average maximum and minimum prices of draft horses, general purpose horses and Western horses from 1899 to 1907 in the Omaha horse market. These averages were

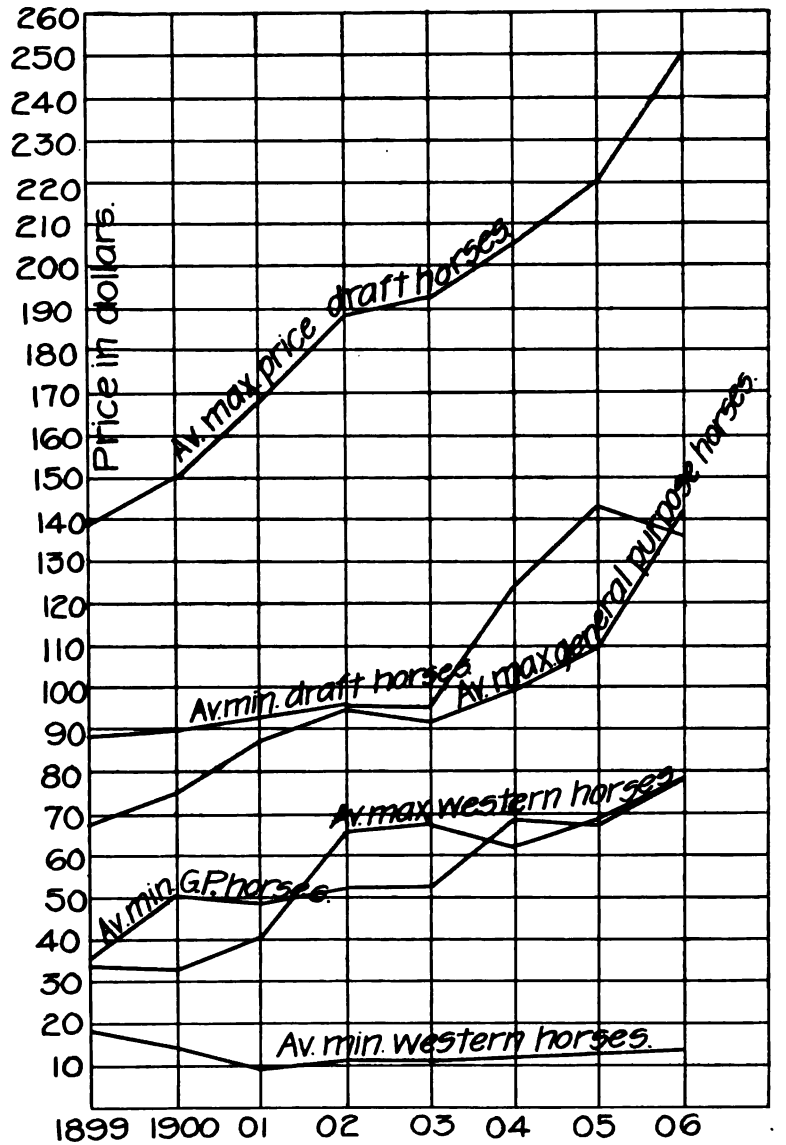

Chart V. Average maximum and minimum prices paid for horses in the Omaha horse market, showing the effect of small range horses on average values. (Yearbook, U. S. Dept. of Agriculture)

computed from tables given in the Agricultural Year Books for these years. The object of Chart V is to show how the average for the entire country is affected by the low cost of the small range-horses. It will be noted that the trend of horse prices has been pretty steadily upward and there is little likelihood that there will be any appreciable drop in prices for a number of years.

The total horse census of the world is estimated at a little over one hundred millions, of which the United States has about one-fourth. The war in Europe will undoubtedly deplete the number of horses in all the European countries and especially of European-Russia which has about the same number as this country. After the war is over, we may confidently look forward to a heavy exportation of horses for a number of years that will have a tendency not only to maintain prices but enhance them and make the necessity for mechanical power even more acute.

While the writer can not conceive of the time when animal power in agriculture either will be or should be entirely dispensed with, it does seem to him, in view of the figures just presented, that the future development of farm power can not economically be carried out by increasing the number of our work animals and that an increased use of mechanical power is certain.

The multiplicity of machines for doing various kinds of farm work that have been brought out during the last score of years has made it impossible for any farmer to compete with the old hand methods and prosper. Power-driven machines are now a necessity and are becoming more so every year. Machines have been invented for almost every kind of work. There are sawing machines, pumping machinery, machines for grinding feed, cutting ensilage, shelling and shredding corn, and for a thousand and one other kinds of work. No up-to-date farmer will now do by hand what can be done by machinery, if he has enough work to occupy more than a day or two. In fact, with the high cost of hand labor, he can not afford to do so. The following table, taken from data submitted in an address by Carl J. Rohrer, delivered before the American Society of Agricultural Engineers at their 1913 meeting in Chicago, will give a

very good idea of the amount of power required to drive the principal farm and household machines. Mr. Rohrer obtained these data in doing experimental work for the General Electric Company.

TABLE IV.

Machine	Minimum hp.	Maximum hp.	Size of motor commonly used on average farm
Sewing machine	.....	.....	1/30
Buffer and grinder	1/50	1/30	both
Vacuum cleaner	1/8	5	1/8 to 1/4
Ice cream freezer	1/8	1/4	1/8
Washing machine	1/8	2	1/8 to 1/2
Meat grinder	1/4	3/4	1/4
Water pump	1/2	5	3
Cream separator	1/10	1/4	1/8
Churn	1/8	3	1/4
Milking machine	1	3	3
Refrigeration	1/2	10	5
Feed grinders, small	3	10	5
Feed grinders, large	10	30	15
Ensilage cutters	10	25	15–20
Shredders and huskers	10	20	15
Thresher, 19" cylinder	12	18	15
Thresher, 32" cylinder	30	50	40
Corn shellers, single hole	3/4	1 1/2	1
Power shellers	10	15	15
Fanning mills	.....	.....	1/4
Grain graders	.....	.....	1/4
Grain elevators	1 1/2	5	3
Concrete mixers	2	10	5
Groomers, vacuum system	1	3	2
Groomers, revolving system	1	2	1
Hay hoists	3	15	5
Root cutters	1	5	2
Cord wood saws	3	10	5
Wood splitters	1	4	2
Hay balers	3	10	7 1/2
Oat crushers	2	10	5

The available mechanical farm power consists of steam engines, internal combustion engines, wind mills and water power. Electric power, generated either by steam plants or hydro-electric stations, is used to a limited extent in some

favored localities, as along the Pacific seaboard, in Montana and in some of the Central States, but, as yet, it has not come into serious competition with any of the other powers, nor is it likely to do so for many years to come. Throughout the Central States of Illinois, Indiana and Ohio, electricity is distributed to a number of farm homes, but the cost is high. The farmers are obliged to build their own pole lines, furnish the wire for transmission to the nearest supply-main and put in their own transformer, and then pay at the rate of ten cents a kilowatt hour for current. While electric power is very convenient, the cost of motors and other equipment just mentioned makes the cost too high for general adoption.

Small water-power plants are available in only a few favored localities, and then the cost of the dam and power equipment is exceedingly expensive, so this kind of power may be left out of general consideration.

The use of windmills has been on the decline for a number of years. The principal objection to their use is the smallness of the power units and the uncertainty of obtaining power when needed. The principal use of windmills is for pumping water and for this purpose they are very widely distributed. On an average, a windmill will not generate more than one tenth to one quarter of a horse power. Large mills, with twenty-foot wheels in a strong wind may develop as much as one and a tenth horse power. Even the immense mills of the Netherlands rarely develop more than five horse power, so as a general source of power, they are also, a negligible quantity except for the single purpose of pumping water.

The first cost of windmill power is extremely high. An ordinary ten-foot mill on a forty-foot steel tower will cost, erected, about $120.00, and it will develop only about 0.12 of a horse power, according to figures furnished by one of the leading windmill companies. In units of this size, the cost per horse power amounts to nearly one thousand dollars. In large sizes, of course, the initial cost will be much lower, but in any event it is high. The only advantage it possesses is very low operating and maintenance cost. There are no statistics available as to the number of windmills in use, but a safe estimate would place the number at approximately 750,000. During the

last ten years, windmills have been quite rapidly superseded by small gasoline engines.

This, then, leaves only two sources of power for serious consideration, namely the steam, gas or oil engine. The former has been in use in this country since about the year 1830. Steam did not come into very extensive use until after the Civil War, and then only for operating threshing machines, running small saw-mills and for grinding feed. Experiments were made in this country, along in the seventies and eighties of the last century, with steam plowing outfits but not with much success, either because the engines were not designed rigidly enough, or because the country was too poor to invest in such costly machines. Probably both causes had an influence on the situation.

About the year 1898, however, when the Western prairies were being opened up so rapidly, a demand arose for heavy power outfits to break up the virgin sod and within the next five years a number of excellent steam rigs were put on the market. Practically every threshing outfit sold throughout the West in the early nineties was sold not only for threshing but for plowing also. Thousands of acres were broken by these rigs, but their great weight and the difficulty of getting water to them on the dry Western plains created a demand for something different and better.

It was these conditions, together with the rising price of horses, that paved the way for the gas tractor. The first of these machines came out about the year 1900, but it was not until six years later that they became practical machines. Two companies divide the honor of being the pioneers in this new industry, the Hart-Parr Company of Charles City, Iowa, and the Kinnard-Haines Company of Minneapolis, Minn. The success of these machines brought into the field a host of competitors among the old threshing machine manufacturers, and by 1912 the tractor industry had grown to considerable proportions. That was the banner year. It was freely predicted by many enthusiasts that the horse was doomed and that in a very short time all farm work would be done with tractors. They practically crowded the steam plowing outfits off the market and thousands of farmers bought them.

A considerable number succeeded with the tractor, but a larger number failed. In some cases, the cause of failure was due to the failure of the machine, but in the majority of cases it was due either to the ignorance of the operator or to the fact that his style of farming was not adapted to power machinery. It was also found that the heavy outfits that were used to break up the prairies were not adapted to general field work, and so the industry has suffered a partial collapse during the last two years. Another factor that contributed to the general slump in business was the faulty methods employed by most of the companies in doing business. The market was not well sold. Farmers were induced to buy, who could not possibly make a success with a tractor, and there was not enough care given to the instruction of the operators. The tractor has suffered in comparison with the automobile because the latter has had the help of countless garages to help keep them in good working order. The tractor, on the other hand, has had to get along generally without any expert attention. Invariably, those who have made a success have been good mechanics. In fact, failures among mechanics or those of fair mechanical ability have been rare.

At the present time, February, 1915, there is a decided revival in the use of the light-weight tractor that sells for a few hundred dollars and will take the place of a half dozen horses. There are perhaps fifty companies that will bring out a light-weight tractor this spring in response to a demand by the farmers of the corn belt and wheat belts. This demand is not one that has been worked up by ingenious and persistent advertising but comes from the farmers themselves, who realize the limitations of animal power and who desire to do a better grade of farming than they have done in the past. Just how the light-weight tractor will develop is difficult to forecast at this time, but where such a genuine need exists there seems little doubt that the manufacturers who have had a number of years' experience will be able to produce a machine that will be able to supplement the horse and the mule, even if it does not displace them. The present tendency toward very light machines, weighing only 3000 or 4000 pounds, probably marks the extreme swing of the pendulum toward light

weight. The tractor that appears, to the writer, to have the best chance for ultimate success will weigh from 6000 to 8000 pounds and have about a 30-horse power motor.

A careful canvass of the States west of the Mississippi made last winter by Mr. A. P. Yerkes, a government agent connected with the Bureau of Farm Management of the United States Department of Agriculture, shows that there are something like thirteen thousand tractors in operation. There are probably not to exceed one quarter as many east of the river, making something less than 20,000 tractors in use in the entire country. These tractors vary greatly in size, but will doubtless average close to forty brake horse power each.

The possibilities for the use of tractors are, however, almost unlimited when the number of farms of large size containing 175 acres or more, is considered. Each one of these farms would appear to be large enough to make profitable use of some form of mechanical power for general farm use, provided one can be built and sold for a price at which the farmer can afford to make the investment.

Steam traction engines are still used as the principal source of power for threshing, and it does not seem likely that they will be displaced entirely for a great many years. From the best information available, which, by the way, the writer has checked over in several ways, it is estimated that there are a total of close to one hundred thousand steam tractors in this country used for threshing and other agricultural work. The average brake horse power of these machines is probably about forty horse power. Quite a large number are used for plowing, for filling silos, grading roads, grinding feed, shredding and husking corn and for operating small portable saw-mills.

We have now left for consideration the small stationary and portable gas and oil engines. The writer has made many efforts to obtain reliable data as to the number in use, but with not very great success. In 1911, statistics for that year were obtained from forty-five manufacturers of farm engines, whose total output of farm engines amounted to a little over 126,000. There are half a dozen companies whose annual output exceeds 15,000 annually, and at least three that will double that figure. The average size of these engines was 5 horse power.

There are, altogether, something over two hundred companies making small farm engines in this country, and it is the writer's opinion that their total annual output has been at least 250,000 for a number of years. The average life of these engines is not far from ten years, so that it seems a conservative estimate would be a million engines with a total of about five million horse power. Altogether, there were 6,261,352 farms in the United States in 1910 and one engine to six and one-third farms seems a reasonable estimate when one stops to consider that many farms have anywhere from one to six engines.

These small machines are used for a great variety of purposes, such as sawing wood, pumping water, grinding feed, filling silos, furnishing electric lights for farm homes, for spraying fruit trees and for many other purposes about the farm home. For all work requiring power about the house or barns, they have proven themselves the most economical and most reliable power available. They require little attention and the cost of operation for fuel is only about two or three cents per horse power hour. In the raising of fruit, the gasoline spraying engine is indispensable. And yet, in spite of its wonderful record for efficiency, the gasoline engine is not used as generally as it should be. There are several million farms that, as yet, have never heard the chug of the gas engine.

There is still left the automobile and the farm truck to consider. The latter is used very little, but of the former, the number is very large, running into hundreds of thousands. In the state of Iowa alone it is estimated that there are 65,000 automobiles owned by farmers, and a number of other states are not much behind. Since these are primarily pleasure machines rather than farm power machines, I shall not spend much time with their consideration. Suffice it merely to say that they are finding a rapidly increasing use in marketing light farm produce and paving the way for better roads and for the use of trucks.

I said in the beginning that farm power exceeds in value and amount that used in all manufacturing industries. The proof has been submitted in the foregoing pages, but to make it more apparent let us tabulate the results:

Kind of Power	Number	Average Value	Total Value	Total Power
Horses and mules	25,411,000	$ 111.85	$2,842,655,000	14,230,000
Harnesses	20,382,000	10.00	203,820,000	.....
Windmills	750,000	100.00	75,000,000	75,000
Steam tractors	100,000	.....	.....	4,000,000
Gas tractors	20,000	2,000.00	40,000,000	600,000
Gas engines	1,000,000	150.00	150,000,000	5,000,000
			$3,311,475,000	23,905,000

The total power used in all manufacturing enterprises, according to the 1910 census, was 18,755,286 horse power. Even allowing a large margin for possible error, it is thus seen that the farmer's power problem is a big one and involves millions of dollars. Mechanical power, as yet, is much smaller in amount than animal power, but it is rapidly increasing and within a few years will doubtless assume first place.

DISCUSSION

Mr. Dickerson.

Mr. I. W. Dickerson* (by letter) desired to call attention in the opening paragraph to the statement of the author that "There is actually more power used on the farm than in all other industries combined". This is true, as he afterwards proves; but it should be kept in mind that, from the standpoint of work done, the number of horsepower hours is decidedly in favor of manufacturing. The manufacturing power plant must be operated to as near its full capacity as possible and often twenty-four hours per day; while, as the author points out, "In our Northern States, a horse works on an average only about three hours per day throughout the year". A manufacturer who planned his work with the idea of using his power plant only three hours per day would be considered a fit subject for an insane asylum.

Is there any way of securing a better and more efficient use of power in farming operations? The power curve for almost any farm shows two or three very marked peak loads, one in the spring plowing and seeding season and another in the fall plowing season. Peak loads, as we know, are the bane of the central power and lighting station manager and probably cause him more anxiety than anything else with which he must contend. Such stations meet the difficulty in two distinct ways: first, by increasing their low-load spots by working up industries requiring power at those times; and second, by dividing up their power units so that a new unit may be thrown into operation only to take care of the peak loads. This enables all their units to be worked at their maximum efficiency.

* Assoc. in Farm Mechanics, University of Illinois, Urbana, Ill.

Mr. Dickerson.

The same principles may be used in improving the efficiency of farm power, and the tendency will be strongly towards a combination of horses and tractors. By adding more variety to farm crops and to the farm operations, the tendency will be to fill up the low places in the power curves and perhaps to cut down the peak loads slightly. Enough horses should then be used to be kept fairly busy a larger part of the year on the general work on the farm which only a horse can do, while the heavy plowing and soil preparation work will be taken care of with the proper sized tractor. In general, the tractor of today will cost not more than the horses which it will displace, and it has the very great advantage of only the simple charge for interest while standing idle, while horses cost practically the same whether working or idle. The oft-repeated advice to "keep the tractor busy" is wrong, it should be "keep the team busy".

Perhaps the most noticeable thing about this whole farm power-equipment question is the deplorable lack of reliable information and data. The amount of horsepower and value invested in the different kinds of power units is known quite accurately, so far as nearly all branches of manufacturing are concerned; but no attempt has been made, so far, to get the power data for the farm. Why should not the number, size, and value of each internal combustion engine, steam engine, and electric motor used on the farms of the United States be tabulated just as it is for manufacturing industries? Also the number and value of windmills, number and value of horses and mules actually used for power purposes, etc.? It certainly must be done, and the sooner a start is made the more valuable such data will become.

Paper No. 231

AGRICULTURE AND THE ENGINEER.

By

J. B. DAVIDSON, Mem. Am. Soc. A. E., Mem. Am. Soc. M. E.
Prof. Agric. Engrg., Iowa State College
Ames, Iowa, U. S. A.

Agriculture is the world's greatest industry. It always has been so and must continue to be. As long as the human race endures, agriculture must supply the constant demand for food. What is true of the whole world, in this respect, is true of the United States. From the Thirteenth Census report, the following data are taken to emphasize the present status of agriculture when compared with other industries.

Thirteenth Census of the United States, 1909.

Total value of agricultural products	$ 8,244,000,000
Value of products, all manufacturing industries	20,672,052,000
Value of products, meat packing industry (largest)	1,370,568,000
Value of products, foundry and machine shop industry	1,228,475,000
Horsepower, used in manufacturing industries	18,755,286
Value of the products of the mines	1,255,370,163
Horse power used in the mines	4,722,479

It is noted from these data that the value of the agricultural products in 1909 was 40 per cent of the value of all the products of the manufacturing industries grouped together, and nearly seven times the value of the products of the mines. It is estimated that twenty million horsepower is available for use in agriculture, which is nearly equal to the power used by the manufacturing and mining industries combined.

The production of agricultural products involves many varied operations. Some of these are far removed from the purely mechanical operations which generally prevail in the factory. The fertility of the soil, the seed, and the climate

which nature provides are vital factors in crop production. Yet, a large part of agricultural production involves many mechanical operations not dissimilar to those used in the factory. That this is true may be proven, indirectly, by the relation in the various states between the value of the crops produced and the amount invested in farm machinery per rural resident, as revealed by the Census. The following table shows quite clearly that farm crop production increases with the investment in farm machinery and the number of work animals. The last item furnishes the best information obtainable in regard to the amount of power used, as the Census does not take into account mechanical power used on the farms. It would be somewhat more satisfactory to have these data per rural worker rather than per rural resident, but the Census does not furnish this. The proportion ought, however, to be very nearly the same.

Table Showing the Relation Between Investment in Farm Machinery, Value of Farm Crops Produced, and the Mature Horses and Mules on the Farms per Capita of Rural Population.

(Thirteenth Census)

	Investment in Farm Machinery	Value Farm Crops	Mature Horses and Mules
Florida	$ 8.33	$ 67.80	.12
Mississippi	10.68	92.60	.21
Ohio	24.60	109.60	.39
Minnesota	42.80	157.50	.55
Iowa	61.85	204.50	.86
North Dakota	85.50	350.10	1.11

Farm surveys which have been made show that the farmer's income varies almost directly with the investment in farm machinery. Under-equipped farms cannot furnish the same income as well-equipped farms. The small farm, which, for economic reasons, cannot be so well equipped, simply provides "a means to furnish a laborer's wage to the operator". Economists generally agree that farm machinery and the extensive use of power have been a most important factor in the development of American agriculture. They have not only been the means of increasing the production per capita, reducing the cost of production, and improving the quality of the products, but

also have had an important and far-reaching influence upon the welfare of the farmer himself. The matter has been well stated by J. R. Dodge when he wrote: "As to the influence of machinery on farm labor, all intelligent expert observation declares it beneficial. It has relieved the laborer of much drudgery; made his work and his hours of service shorter; stimulated his mental faculties; given an equilibrium of effort to mind and body; made the laborer a more efficient worker, a broader man and a better citizen".

In the production of livestock and livestock products, the mechanical and constructional features are also important factors. The efficiency of the labor depends directly on the convenience of arrangement and the character of the equipment. Livestock cannot be expected to do well unless quartered in comfortable and sanitary buildings. The quality of many of the livestock products, such as milk, depends directly upon the sanitation of farm buildings, thus influencing in a general way the health of all of the people. In 1909, over $6,325,000,000 was invested in farm buildings in the United States, representing nearly 15 per cent of the fixed capital of the farms. The value of farm buildings increased between the years 1900 and 1910 at the rate of over $277,000,000 yearly. If it is assumed that an equal annual expenditure is required to cover the repair and depreciation of buildings, it follows that the farmers of the country are spending over five-hundred million dollars annually for farm buildings.

A very small proportion of the rural population is included in the registration area from which vital statistics may be obtained. There is abundant evidence, however, that notwithstanding the generally favorable conditions which prevail in rural communities conducive to good health and longevity, the health conditions in the country are not so good as in well regulated cities. Inasmuch as 50 per cent or more of the population of the United States is essentially rural, the question of rural sanitation must be recognized as being of first importance, not only from the medical but also from the constructional or engineering standpoint.

It must be appreciated by all that an increase in the area of agricultural land in the United States must come through

reclamation of now worthless areas, either by drainage or irrigation. It is estimated that the total area of land reclaimed by drainage is thirty-two million acres, and twenty million acres have been reclaimed by irrigation. It is further estimated that seventy-four million acres may be reclaimed and two hundred and fifty million acres made more productive by drainage, and that fifty million acres may be reclaimed by irrigation, for which water is available. An attempt will not be made to estimate the value of the lands reclaimed by drainage and irrigation, but it is recognized that it would be represented by an enormous sum.

Public roads are a vital factor in the social and economic condition of rural life, and have a direct bearing upon the cost of production and distribution of agricultural products. This fact has been recognized for many years, and there are many federal and state organizations for the purpose of directing and aiding in the expenditure of the enormous sums which are spent annually for this purpose, and which the Secretary of Agriculture, Houston, estimates to aggregate $200,000,000. That the road problem is important to the entire nation and offers a splendid opportunity for economic advancement, is clearly emphasized by the estimated present cost of transportation on country roads, which is given as 23 cents per ton mile, or nearly one hundred times the cost of railroad transportation.

Many of the purely manufacturing processes involved in preparing agricultural products for the market cannot be separated from the farm and must be carried on in conjunction with the purely agricultural work. The manufacture of dairy products is an example of such a correlation. Again, many of the manufacturing processes, although removed from the farm, must be closely related to agriculture.

The foregoing discussion has been for the purpose of setting forth, in a brief manner, the extent and importance of the various features of agricultural activities which are of a mechanical nature, and which can best be executed by the use of engineering methods and practice. It is obvious that agricultural development and progress is dependent to a large extent upon the use of engineering science and art. It is quite a general custom in the United States to style the engineering in-

volved in and identified with the industry of agriculture as agricultural engineering.

A committee of the American Association of Agricultural Colleges and Experiment Stations on methods of teaching agriculture, defined and described the scope of rural engineering as follows: "In its most comprehensive sense rural engineering includes all of the branches of civil and mechanical engineering relating to the location, arranging and equipping of farms and the construction, operation, and care of farm implements and machinery". Agricultural engineering may be likened to mining engineering in that it is a branch of engineering connected and identified with an industry, rather than engineering of a special type or class.

"Agricultural engineering" and "rural engineering" as indicated above, by the use of the latter term, are used with a common meaning. "Agricultural engineering" is the more generally used term and is almost universally used in the West and Midwest, while "rural engineering" is more generally used in the East. "Farm mechanics" is a term used to represent certain phases of agricultural engineering, and no doubt has been used in the same sense as "mechanic arts" was used at one time where the term "engineering" is now used.

To develop agricultural engineering, it is not necessary to create an entirely new science, for it is largely the adaptation of civil, mechanical and architectural engineering to the problems of agriculture. It is true, however, that new branches of agricultural engineering are being developed and extended. As now generally recognized, agricultural engineering consists in at least eight branches, viz:

Farm Machinery
Farm Power
Farm Structures
Rural Sanitation
Manufacture of Agricultural Products
Drainage
Irrigation
Public Roads

The first four of these relate more directly to the farm, and naturally are of more recent development, while the last three

relate to the agricultural community and have reached a higher state of development.

Agricultural engineering, in America at least, did not attain early recognition as a distinct branch of engineering. This late development was due largely to two facts: first, agriculture was in such a state of development that there was little or no demand for the services of the engineer, and second, technical education developing, in particular, along the line of scientific agriculture and engineering identified with other industries made it difficult to emphasize and develop the engineering closely related to agriculture. Scientific agriculture in the United States made slow progress for many years. It is obvious that a branch of engineering depending upon an industry cannot forge ahead of the industry itself. When agriculture did begin to make progress, the conditions in technical education were such as to make the development of agricultural engineering slow.

A discussion of agricultural engineering may be divided between agricultural engineering as an applied science and agricultural engineering as a profession. An elementary knowledge of the principles of nearly all of the branches of agricultural engineering is valuable to those who would make the farm the object of their life's work. This necessitates the organization of agricultural engineering information and research and investigation to develop and extend the science. In addition, one or more phases of agricultural engineering may be made a specialty for a professional career.

The value of agricultural engineering as an applied science is recognized by the agriculturist. He cannot, however, be expected to become a specialist in agricultural engineering, but would ordinarily specialize in one of the more important branches of agriculture, such as grain growing, animal husbandry, horticulture or dairying. That the value of agricultural engineering in the training of the young farmer is recognized by agricultural educators, is evidenced by the more and more general introduction of agricultural engineering into the curriculum of the agricultural college course. These studies are not arranged to make the farmer an engineer, but merely to enable him to perform his necessary duties in a more efficient

manner. It ought also to lead the farmer to appreciate more fully the value of the services of a trained engineer. It is true, however, that the farmer must be an all-round man and must be prepared to perform many functions he would not be called upon to perform under other conditions, such as might exist in a large organization with a special staff for each special line of work.

It is not best to pass, without due consideration, the value of training in agricultural engineering science to the agriculturist. It may be called "farm mechanics" by those who so desire. In many respects the farm may be likened to a factory. Small grain production, although requiring a fundamental knowledge of the seed, fertilizers and methods of tillage, is largely a series of mechanical operations. The plowing of the soil and its smoothing in the preparation of the seed bed, the drilling of the grain, the harvesting and threshing of the crop when it is grown, and finally its transportation to commercial centers where commercial transportation companies may transport it to the consumer, are all mechanical operations requiring for their successful execution engineering methods. Much of the comfort and pleasure of farm life comes through the introduction of engineering methods and appliances. Reference is here made to such things as better homes, water supply, sewage disposal, etc. The farmer can now afford, in the present state of prosperity in agriculture, to have more of this work performed for him by a specialist, but, nevertheless, he must do for himself much work of an engineering nature. This will not keep the professional engineer from the field, but will lead to a more general appreciation of the work of the engineer by the agriculturalist.

Agricultural engineering is gradually opening as an inviting field for the professional engineer. In Europe the agricultural engineer has been recognized for a long time. The writer has in his library a book in French, on the fly-leaf of which are listed the writings of no less than five "*ingenieurs agronomes*". Some nine years ago an organization of the agricultural engineers in the United States and Canada was formed, known as the American Society of Agricultural Engineers, and the membership has increased from a very few to the neighbor-

hood of two hundred. The membership, during the past year, increased nearly forty per cent.

It is to be noted, however, that agriculture is not generally organized on such a large scale as to provide a place for the specialist of one or a few of the various branches of agricultural engineering. Like the work of the farmer, whose activities are quite general, the work of the agricultural engineer must, likewise, be quite general. If his work is not made general, he will not be able to serve to the extent that he will be able to obtain a livelihood. This condition has created a demand for an agricultural engineer with a special training confined to the engineering identified with agriculture.

This demand for the agricultural engineer first appeared in colleges for men to handle instruction in agricultural engineering. It was not possible, as this work was introduced into the curriculum, to employ a complete staff of men consisting of a mechanical engineer, a civil engineer, and an architect. It was necessary that one man offer the work along all lines. It was found, furthermore, that first, there was much in any one of the other branches of engineering that had little or nothing to do with agriculture; second, that in the older branches, emphasis had been laid on engineering foreign to rural life, and such an engineer was not in a position to render the best service in solving agricultural problems; and third, familiarity with agricultural conditions was found to be necessary, not only from a practical but also from a scientific standpoint. The early positions were filled by mechanical and civil engineers and by men trained purely in agriculture. It was soon recognized that each of these men had much difficulty in handling the work satisfactorily. Further, it was recognized that although the work was fundamentally of an engineering nature, the man agriculturally trained had some advantages to his credit in being able to correlate his work to that of the various branches of agriculture.

Several colleges in the United States of late years have undertaken to supply this demand by training agricultural engineers. The college courses offered for this purpose differ slightly in their make-up, but, in the opinion of the writer, a course in agricultural engineering should be fundamentally a

strong engineering course, having the same foundation in mathematics, science, cultural studies and general engineering subjects—such as analytical mechanics and materials—as either civil or mechanical engineering. The man trained by such a course cannot be said to be weak in fundamentals. To this fundamental training are added the branches of civil and mechanical engineering which relate to agriculture, and special studies in agricultural engineering. The value of these special courses in agricultural engineering cannot be overlooked, as they bring the student into immediate touch with the engineering problems in agriculture and furnish as much information as is available relating thereto. It is obvious that little of this work can be offered to students in either civil or mechanical engineering. The engineering principles may be the same, but there is a direct application which counts much toward the development of the subject. In addition, it will be found possible to include some of the general courses in agriculture. If an engineer is to solve the engineering problems in agriculture, it is quite necessary that he know something of the modern scientific methods of agriculture and be in sympathy with the industry and its workers. A general practical knowledge will not suffice. For an example, a knowledge of soils is useful to the man doing drainage or irrigation engineering. Many other examples might be cited.

It should be emphasized here that no attempt should be made to offer as agricultural engineering an elementary course in engineering. It should be just as thorough and strong as any engineering course, recognizing the limits to which a subject may be exhausted in an undergraduate course. Experience has demonstrated that all of the eight branches of agricultural engineering can be carried farther in an agricultural engineering course than in any other, with the possible exception of highway engineering, which has in many places become a specialty in itself. Thus, drainage engineering is carried farther than in a civil engineering course, and additional courses in agriculture and mechanical engineering are added which are related to the subject.

A course in agricultural engineering should not be confused with an agricultural course where, by a group arrange-

ment, a student is permitted to select more agricultural engineering work than is usually required. This arrangement, no doubt, meets a desired end, but the student so trained is still an agriculturalist and not an engineer.

The argument that it requires a distinct type of man to handle either civil or mechanical engineering is not tenable. Neither is it correct that an engineer of one branch of the profession can avoid entirely the work of another branch. All constructional work is more or less mechanical, and this is especially true of drainage and irrigation practice and highway construction. The civil engineer engaged in either of these branches cannot avoid the use of machinery and the mechanical problems involved.

At Iowa State College, which was the first to offer a course in agricultural engineering, the original purpose was to assist in supplying the demand for instructors in agricultural engineering. Although many of the graduates are now engaged in educational work, the majority have found it a special inducement to enter other fields of activity, indicating that there is at this time a demand for the professional agricultural engineer. Graduates are now filling the following positions:

a. Professional agricultural engineers.
b. Agricultural contractors.
c. Instructors of Agricultural Engineering in colleges and secondary schools.
d. Managers of farms where agricultural engineering practice is the principal feature of the management.
e. Positions in the agricultural machinery industry.
f. Government and experiment station experts.

One of the fields which may yet develop is that for the consulting agricultural engineer. It is believed that when this branch of engineering is more fully developed and the work of the trained engineer more generally appreciated, it will be possible for an engineer to build up a lucrative practice in progressive rural communities if he will be able to render service in several branches of agricultural engineering. At least two engineers in Iowa are attempting to do this. It is proposed in one wealthy county in another state to supplant the county

advisor or expert with three experts; one an agronomist, one an animal husbandryman, and one an agricultural engineer. This has been taken by some to mean a general development along this line.

It is not proposed to exclude from the field of agricultural engineering all except those who have had a special training in the work. There are in agricultural engineering many fields of work where the civil or mechanical engineer will find he can render efficient service. The design of agricultural machinery may be such an example.

It is very easy, by the addition of a little extra time in training, to make a combination of agricultural engineering with either civil or mechanical engineering. Such a combination is to be highly commended and usually requires about one extra year, and experience has indicated that this additional time is profitably expended. The work of the architect is so little involved outside of the science of structures, that there is little need of laying special emphasis on this branch of agricultural engineering. Farm structures must be especially practical.

BIBLIOGRAPHY.

Thirteenth Census for the United States.

"Influence of Farm Machinery on Production and Labor", H. W. Quaintance.

"An Agricultural Survey", G. F. Warren and K. C. Livermore, Bul. 295, Cornell Agric. Exp. Sta.

"Agricultural Engineering and the Demand for Agricultural Engineers", Samuel Fortier, Vol. IV, Trans. Amer. Soc. A. E.

DISCUSSION

Mr. Walton.

Mr. S. V. Walton† stated that the work to be done by the agricultural engineer in the future is a big problem. The question of the efficiency of power is becoming more and more important as applied on the farm. In a paper recently presented before this Congress, the author stated that the kilowatt-hour per capita used in a community is a measure of the civilization of that community. In Mr. Davidson's paper it is stated that the total horsepower used on the farms of this country amounts to 18,000,000 hp. California has for future development from hydraulic sources 6,000,000 hp., while the present development is only

† Pacific Gas & Electric Co., San Francisco, Calif.

600,000. This indicates future possibilities. One power company up to 1913 distributed its power largely for mining purposes, while in 1913 the agricultural industry used almost as much power as the mining industry. Mr. Walton.

In the paper by Mr. Rose, reference is made to the cost of keeping a horse and a comparison is made with the high cost of electric power. The conditions referred to by the author do not exist along the Pacific Coast. The use of electric power here is growing very rapidly and everything is in favor of the use of electricity.

Mr. W. D. Young desired to ask Professor Davidson to explain the difference between an agricultural engineer and an agriculturist. Mr. Young.

Also, he said that it had been mentioned that many farms under 175 acres are accepted as economic failures. Would an agricultural engineer help to make these small farms a success, or would he devote his time to the larger farms and leave out of consideration this large and important class of farms.

Professor Davidson, replying, said that an agricultural engineer is a man who makes a specialty of the problems of engineering as applied to agriculture, while an agriculturist does not specialize. If we go back to a fundamental definition of an agricultural engineer, we are bound to come to the conclusion that an agricultural engineer is an agriculturist, but if he does not specialize, he is not an agricultural engineer. Prof. Davidson.

To Mr. Young's query concerning the service of the agricultural engineer to the small farmer, Professor Davidson replied that it is possible for an agricultural engineer in the Middle West to get fees from large farmers. If he can help the large farmers his work would of necessity reflect help to the farmer on small farms. The small farmer can hardly offer sufficient inducement for a man with ability to devote his time to, unless he can do it in a collective way; and this is an agricultural engineer's duty,—to work to the help of these small farms in a collective way. Some day there will probably be agricultural engineers for each county, to help the small men in a collective way.

Mr. H. H. Musselman,* President, Am. Soc. of Agri. Engrs., by letter, desired to make clear the aims and purposes of the American Society of Agricultural Engineers. As stated in the constitution of the Society, the purpose is to "promote the art and science of engineering applied to agriculture". Mr. Musselman.

Both of these great fields of enterprise are of extremely ancient origin, beginning even before the dawn of history. They have developed as separate industries, hitherto having been considered as having little relation to or little dependence upon each other. Very few of what might be considered the great engineering works of ancient times, as, for example, the pyramids and the sphinx, had any direct bearing upon agriculture. No doubt many of the ancient roads and waterways, some of which are indeed excellent examples of engineering, even to engineers

* University of Michigan, East Lansing, Mich.

Mr. Musselman.

of modern times, have contributed indirectly to agriculture, but in the main they were not constructed with a view to its development.

The last century, however, marks the beginning of greater development in both these fields,—in fact the time of the greatest advancement in each field is practically within the memory of men now living. In view of the wonderful and amazing development of the last one hundred years it would be beyond the limitations of man to say how long or in which direction this advancement is to continue. This much seems clear, however, that as these arts develop they come to have more of a dependence on other agencies, as well as more of an interdependence. Hence, finding their own insufficiency, they have come to seek mutual benefit, each in what the other has to offer. And the tiller of the soil, with whom the rudimentary ideas of engineering probably originated, has now come to advanced engineering to seek coöperation.

Now it is with this coöperation or interrelation that the Society is intimately concerned. Perhaps the constitution in stating the purpose of the society as, "to promote the art and science of engineering as applied to agriculture" does not state in its fullest sense the possibilities of this organization; for in bringing engineering to agriculture, the former must also receive a benefit from the latter. It may be hoped that this sense of the reciprocity of helpfulness will be felt deeply enough to bring to engineering the realization that she is deeply indebted to and dependent upon agriculture, the most basic of all industries. The role of this Society then, in its broadest sense, is to serve as a clearing house between these two industries. It should be an organization whose seal of approval is sought on matters which pass from one field over to the other. In a broad sense, the duty of the agricultural engineer is to establish the fullest possible relationship between two world activities,—engineering and agriculture.

Turning to the subject at closer range, it will readily be admitted that both engineering and agriculture are constructive. Success or advancement in each, therefore, is, to a degree, commensurable with the intelligent or scientific application of natural laws.

In the field of farm and power machinery, more than in any other perhaps, engineering was first brought into close touch with agriculture. As a result, operating methods on the farm have been almost entirely revolutionized, and, as a consequence, the enormous demands for farm machinery have stimulated engineering, manufacture, and distribution to an extent to which the world has never before dreamed. In men like McCormick, Hussey and Appleby are seen the forerunners of the agricultural engineer. Yet the full possibilities are far from having been realized. The work of these men and others who have blazed the way for agricultural engineering is yet to be amplified, refined and brought to a higher degree of perfection by the present and future agricultural engineer, who has been trained more systematically, if not more thoroughly, than those whose efforts have previously illuminated this field of endeavor.

Mr. Musselman.

Thus far in the development of machinery, attention has been confined chiefly to machines, the function of which has been to transform power into useful work. Today, however, we are upon another era of development,—the generation of motive power by mechanical means. Notable progress already has been made and the agricultural engineer, who has been recognized as such, has a justifiable reason to feel proud of the fact that he has had some influence in this development through the agency of motor contests and the interest he has aroused in this, his recognized field. These developments are so notable that if their further course may be predicted by what has been seen in similar lines, the dawn of another day may be anticipated,—a day wherein the methods of operation in agriculture will again be revolutionized through the application of mechanical power to agricultural operation.

Again as the world grows older, the need of putting to use every acre of usable land becomes more and more keenly felt. The response to this need comes in schemes of engineering which will bring water to arid land and remove it from the flooded and wet, until both these areas become rich, productive, and valuable. Then, too, the world feels the need of conserving her resources. Houses and other buildings need to be correctly and economically planned in order to provide for the comfort of man and beast; roads must be built to minimize the expenditure of power and effort in transportation, and to bring the ends of the earth closer together. Furthermore, health should be protected, and the living conditions of the agriculturist be made ideal. With all these movements the agricultural engineer is deeply concerned.

In concluding, the writer desired to quote from Professor Davidson, who so aptly stated the work of the Society in his, the first president's annual address in 1908: "The work then of this body must be largely educational, for not only must the science of agricultural engineering be developed, but its practice must be given to the world. As soon as better homes and more improved machinery, more complete and refined drainage and irrigation systems and better highways are demanded by the people in general, in a like proportion the prosperity of the nation and the agricultural engineer will advance.

Mr. Coates.

Mr. D. S. Coates* (by letter) desired to emphasize the points made by the author of the paper regarding the training and mission of the agricultural engineer. He felt sure that there is just as distinct a field for the specially trained agricultural engineer as there is for the civil or mechanical engineer. The demand for this engineer is slowly increasing and new avenues are opening up for his labors every day. Calls have come not infrequently to the attention of the writer from some large farmer for such a man. Assistance is desired in planning farm buildings, their arrangement and design, or perhaps the selection of a large consignment of farm machinery. The amount of money involved

* Professor of Agricultural Engineering, Mississippi Agricultural & Mechanical College.

Mr. Coates.

is large and he is willing to pay well for the advice. We have many farms in this part of the country from 1000 to 10,000 acres which are run by one man or a company. These farms are run to make money and their operators are very keen to have all equipment of the best and the most efficient types. Manufacturing firms also often wish outside advice or expert counsel on some piece of machinery for farm use.

Agricultural contracting is a very attractive field for the agricultural engineer, as there are large drainage, irrigation and farm building contracts continually being let. Some of these projects are very large and call for the very best engineering skill.

The writer felt that it is only a question of time before the heads of our immense farm machinery and farm motor manufacturing plants will be college-trained agricultural engineers. These large plants, which are turning out millions of dollars worth of machinery to be used on the farm, must be in charge of men who have had the best possible training along agricultural and engineering lines. In fact, most of the men who are doing such excellent work as heads of these firms at the present time would have been college-trained agricultural engineers if the colleges had offered such training when they went to college. In its absence, however, they were compelled to get their training by serving a long apprenticeship in the shops and experimental fields.

The calls from colleges and experiment stations for agricultural engineers constitute at the present time the principal demand. These positions call for specially trained men, and those having a degree in agricultural engineering seem to get the preference.

Mr. Page.

Mr. L. W. Page,* M. Am. Soc. C. E. (by letter) desired to emphasize certain of the points brought out by the author of the paper.

There has been for several years a demand for the application of engineering principles to rural or agricultural operations. Unfortunately the demand has not been recognized by engineers to the same extent that it has been by those engaged in farming operations, or in industries allied thereto. Because of its slowness in recognizing this field for engineers, the engineering profession has not been in position fully to meet the demand for agricultural engineers in the past. Coupled with this lack of preparedness on the part of the engineer has been the failure on the part of the farmer and the agriculturist to realize that the engineering graduate should be given the same opportunity to familiarize himself with what may be called the "trade conditions" of agriculture that is given him in any branch of manufacturing or engineering development. As is generally recognized, it is not the function of an engineering course to turn out graduates thoroughly grounded in the minute details of any particular branch of manufacturing or construction, but, in so far as possible, to give a thorough grounding in engineering principles, and a general knowledge of the fundamental processes of several branches. It

* Director of Office of Public Roads and Rural Engineering, U. S. Dept. of Agriculture, Washington, D. C.

Mr. Page.

is expected that the graduate must devote a year or more after graduation to the acquisition of the operative details of that branch that he elects to follow.

Unless he has had considerable farm experience before graduation, it is not to be expected that a mechanical, civil, or electrical engineer will step from the graduation platform to the field of agricultural engineering and become a pronounced success immediately, any more than it is to be expected that the graduate of a medical college will within a week after graduation be performing major operations, or that the graduate of a law school will plead cases before the Supreme Court within a short time after graduation.

Through the failure to recognize this limitation the feeling has grown up in some circles that the agricultural engineer must be an agriculturist rather than an engineer. This, in Mr. Page's opinion, is erroneous, and he does not look to see agricultural engineering as a profession reach the standing to which it is entitled until the fact is generally recognized that it is primarily an engineering profession, nor will it reach that desired point until it is recognized also that the engineer must be well grounded in the fundamental operations of agricultural work and in the conditions to be met in the application of engineering principles to that work.

He is sure in his own mind that the success with which the graduates in engineering of the Iowa State College have met is due in great part to the fact that their work in college was done under the supervision of a man who had the thorough and rigid training of the engineer combined with the knowledge of agricultural conditions, and the imagination to see the possibilities open to the profession of agricultural engineering.

That the need of work along the lines of agricultural engineering is recognized by the United States Government is evidenced by the fact that a reorganization of the U. S. Department of Agriculture was made effective on July 1, 1915, in which all the engineering work of the Department was placed in one bureau, this being the Office of Public Roads and Rural Engineering. In addition to acting as a consulting engineering bureau for all other bureaus in the Department, the scope of work in the Office includes the following: highway engineering, including maintenance, construction, economics, and chemical and physical tests of road materials; drainage; irrigation; water supply; drainage, or sewage, disposal; the design and grouping of farm structures of all types; traction investigations; and all other rural engineering subjects involving mechanical principles.

That there is need for such a bureau in the Department of Agriculture is shown by the fact that already it is swamped with applications for advice and assistance. It is particularly gratifying that so many of these requests are for assistance in securing a good supply of pure water, for help in installing a septic tank or other good system for sewage disposal and for information relative to conveniences and labor-saving devices for the kitchen, and elsewhere in the farm home.

Mr. Page. The writer was pleased to note that Prof. Davidson had so emphatically stated that the essential requirement of an agricultural engineering course is that it be strong in both fundamental and applied engineering subjects, and that it must not be confused with an agricultural course in which a few engineering subjects are placed, and which, of necessity, must be to a great extent informational in their nature. He believed that every agricultural course should offer, either as a requirement or as an option, considerable instruction in shop work and in engine and machinery operation, not for the purpose of turning out agricultural engineers, but to equip each man going into farming or allied operations with sufficient knowledge to enable him under ordinary circumstances to be independent of outside help. It is very probable that a man with such a training will be the first to call an agricultural engineer into consultation when conditions arise that are distinctly out of the ordinary, or when it is desired to prepare a layout and program for present needs and for future development of the farm.

He felt, further, that the field of the agricultural engineer is not limited strictly to purely farming communities or operations, but covers also the engineering work to be done in small isolated villages and communities.

For some years it is probable that the most successful agricultural engineers will be those who have had considerable farm training and experience prior to graduation, but there seems to be no reason why, as the profession is developed and the requirements become more generally known, there should not be found, each year, an increasing number of graduates with little or no farm experience, who will have a very good grasp of the conditions to be met, and who will, after brief experience become competent in this line of work.

The writer considered that this condition is much to be desired, as it will bring new blood and a new viewpoint into the profession, and will tend to prevent the danger of in-breeding, which is as fatal in an educational institution or in a profession as it is in human or animal life.

Prof. Davidson. **Prof. J. B. Davidson**, in closing, said that although the opinions expressed in the various discussions have indicated a general confidence and faith in the future of Agricultural Engineering as a professional specialty for the engineer, there is some difference in the ideas presented concerning just what offices such an engineer should fill. To the author it is not important or necessary that all of the various fields of activity in which the agricultural engineer may engage be made clear; it is sufficient that we see certain definite opportunities now and let the future prepare the way for development. If it is granted that agricultural progress can be furthered by the engineer, then it is fair to grant that there is now a field of service open to the man who has a vision of the opportunity.

The author will agree with Mr. Page that engineers in general have not been as keen to see the opportunity for service in connection with the engineering problems of agriculture, or as willing to further the

development of the specialty as the agriculturists. This has no doubt been due in part to the lack of intimate contact, on the part of the engineer, with agriculture, and also to the organization of technical education in separate divisions of agriculture and engineering, making the development of a specialty depending on both divisions a difficult matter. Prof. Davidson.

It is hoped that the future will witness more coöperation between the engineer and the agriculturist, especially those who are responsible for the direction of our educational affairs.

Paper No. 232

TECHNICAL EDUCATION FOR THE PROFESSIONS OF APPLIED SCIENCE.

By

IRA N. HOLLIS, Mem. Am. Soc. M. E.
President, Worcester Polytechnic Institute
Worcester, Mass., U. S. A.

Technical education in the United States may be investigated under either of two heads. One of them relates to the training of workmen for the industries, supplemented by enough general education to make them intelligent and useful citizens. The other deals with the collegiate studies in science that commonly lead to a profession. The name of a technical school is not a reliable indication of its place in this classification. It is often as confusing as a college which may be anything from a business school to a university. The word institute is most commonly used for the higher education, especially when associated with the word polytechnic or technology, but used alone it, too, covers a very wide range from trade school to professional school. It would almost seem worth while to call the Polytechnic Institutes Colleges of Applied Science, as set off against Colleges of Liberal Arts. They are both institutions of higher education, covering generally the same ground for two years, and then differentiating into studies with a professional or utility end in view and studies with only general information or mental training as the main object. Roughly speaking, this distinction between the two types of technical education is supposed to be expressed by the words "hand work" as contrasted with "head work".

It is a curious fact that the professional side of technical education should have been the first of the two to gain systematic attention in America, as shown by the fine record of the Rensselaer Polytechnic Institute, founded in 1824. Workmen

were left to learn their trades as best they could until the modern trade school, or vocational school, came into existence. The manual training, or Mechanic Arts High Schools are not strictly speaking vocational and are, therefore, not easily classified in either of these two groups, as their purpose has varied somewhat with the ideas of the locality. Usually, they have simply supplemented the high school systems of our cities for boys who need practical stimulus towards a general education without training for some special occupation. The trade school is one of our most useful institutions, so long as it remains true to its purpose; viz., the training of young men for the trades. The country has great need of good mechanics who are not over-educated by ambitious teachers into something between the working and the professional classes. Furthermore, a large body of foreigners must be trained into industrious Americans through these schools. The great manufacturing corporations have begun to discover the value of producing their own workmen by means of apprenticeship departments under the management of good teachers. They are wisely supplementing the grammar and high schools with much the same training to be obtained in the public vocational schools. An excellent example of this is found at Lynn under the General Electric Company, whose public service in thus lifting the general average of workmen deserves cordial recognition. The trade schools are mentioned here only because, in some instances, they form the stepping stones to a higher education.

The subject chosen for this paper relates rather to the professional side of applied science, on which much has already been written. Notwithstanding the numerous publications and discussions in engineering societies, it is doubtful if there is even substantial agreement upon the best methods of training young men for the technical professions, except along very general lines. Most educators and members of the engineering profession will agree that an engineer ought to have a broad fundamental education as a basis for the subsequent study of applied science, but a wide divergence of opinion will surely be found in the discussion of the word "broad". What is a broad education? Too often, it is what the person speaking or writing has studied at college, and yet, if we define it as a systematic understanding of

other people's problems, most college courses are narrowing. As a matter of fact, an education in a university of recognized standing may be as limited in field as that in some technical schools. Excellent examples of this might have been found in the elective system at Harvard University, which permitted a boy to specialize from start to finish in any direction that pleased him. He might put nearly all of his time into mathematics, or any other technical subject. The system has been changed somewhat under a new administration, but nevertheless a student may now limit himself during his four years' course in much the same way that a student in any technical school would confine himself mainly to courses of a special nature.

Any specialty to which a human being devotes his entire time has a tendency towards narrowness. This appears even in the writings of learned men. Nothing could be more pathetic than some of the papers and addresses by college professors on the European War. Any man who keeps to the one subject he has studied in college is likely to be a cultivated prig. Experience of life usually tends toward a broad education, and the college must be judged by its success in giving the power to assimilate most quickly and most easily. When we come to compare the technical school with the college, it is perfectly plain that three-fourths of the work given in the former might be taken in the latter towards the bachelor's degree. The drafting-room, workshop and laboratory are usually too practical for the ordinary undergraduate degree, and yet much of the instruction given in these groups is quite as valuable as the laboratory work in physics.

In all schools, the scientific method must be safe-guarded against reducing everything to a mathematical formula without taking into consideration the human element. This is the failure of many excellent courses of study, especially in mathematics and the sciences, whether they are taught in colleges or technical schools. Again, it is not too much to emphasize that the spirit of the subject determines whether it is well taught and broad. Any technical application that makes more of the technique than of the larger principles involved in science is likely to be misleading.

One of the reasons why graduates of technical schools seem

to compare unfavorably with graduates from non-technical colleges is more likely to be the fault of their experience after graduation than the narrowness of their undergraduate years. This subject is not capable of adequate treatment to determine all the facts of the case. The criticism that scientific men and engineers cannot talk on their feet is a perfectly sound one, but then, few men can talk well on their feet. It must be remembered that the engineer's work is so absorbing that he has not time for cultivating oratory, sometimes no time for cultivating what would be more advantageous, the power of expression. Still, much of the argument against the ability of engineers to express themselves and against their general education no longer holds good as the profession is gradually making its place as a learned profession.

There is a great variety of treatment of the technical subjects in schools and colleges. One example will be sufficient to illustrate this fact. Mechanical engineering is taught in some places with practically no shopwork for the students, while in others a great amount of shopwork in school is considered absolutely essential to the training of a well-qualified mechanical engineer. Few schools ever get beyond the mere craft stage, affording only a slight hint that the modern industrial world has been almost revolutionized in its methods by a few enthusiasts on efficiency.

The value of shopwork in the training of an engineer, particularly a mechanical engineer, depends so much upon the spirit and purpose behind it that a good case cannot be made out in favor of any exclusive plan of teaching it. Several different methods have been tried, but not one has survived to the exclusion of all others. English engineers have divided the study for the profession of engineering into training and education, meaning by the former the practical work in a shop, and by the latter the theoretical book courses in a technical college. Their discussions have covered the field, always under the theory that the two should be kept entirely separate. Some believe that part or all of the practical work should be taken in advance of the college course; others that it should be placed in an apprenticeship course after the theoretical instruction has been completed.

Americans have generally held the theory that the two should go hand in hand through part or all of a four years'

course. Nevertheless, there is no real agreement in this country as to details. In some cases, the shopwork is introduced into the curriculum more from force of example than from conviction, and under such circumstances is a mere routine hardly worth the time spent upon it. Young men can do far better by taking the theoretical courses first and the apprenticeship in a real shop afterwards. In other cases, it is given simply for the knowledge of materials and tools that every engineer should possess, and, as the catalogues sometimes say, for practical illustration of the theoretical instruction. Here, again, it is of comparatively low efficiency; for the knowledge of materials and tools is very limited, and the understanding of every-day manufacturing operations almost entirely lost. Furthermore, shopwork is not the best illustration of theory. A good course in Physics is better. The great danger, too, in this kind of shopwork is the slip-shod methods at the hands of teachers who have had little experience in real manufacturing.

The alternative system by which a student passes half-time in a manufacturing shop and half-time in the class room may do well under some circumstances. It is at least being tried out and should give the profession a fair basis of judgment in course of time.

In one school, the Worcester Polytechnic Institute, the belief prevails that shopwork is of no great value unless it is so combined with lectures, reports on cost systems, accounts and shop management, as to afford a real understanding of manufacturing. To this end, a commercial shop doing a business of from 50,000 to 60,000 dollars a year has been maintained as an integral part of the Institute for nearly fifty years. The organization is that of any other shop with foreman and employees who work the year through, while the students get their instruction, and a larger amount than in any other technical school, in contact with the permanent force. They also have access to the accounts and time cards in making their own reports. It is not necessary here to go into the details of this system, which has all the elements of modern workshop management. Here the shopwork in a commercial shop connected with an institution of learning has a genuine value in a scientific sense, when intelligently directed. The main object of any school, one that is often lost sight of, is,

after all, the power of application and work. The curriculum makes little difference, if the students acquire that power. The only drawback lies in the financing, as the cost of the product is likely to be higher than in a shop where every man is a real producer.

The profession of mechanical engineering has changed greatly in the past forty years, in proportion as the great combinations have been formed and as machinery has been standardized. Boilers and engines are no longer designed outside of the large shops where they are built, except for special applications or in the rare instances where an engineer has some ideas that he wishes to put into practice. As a consequence, the modern mechanical engineer is likely to be a business man as well as an engineer. Here, again, the power to work transcends everything else and a workshop that sends a boy out with an exalted sense of his attainments is likely to leave him in the end dissatisfied and without faith in hard work.

The above holds particularly in Mechanical Engineering, but all other branches of engineering have their practical side, which is good only if properly taught. It should always have a relation to some mental effort on the part of the student. As between a practical course with some theoretical instruction and a theoretical course with some practical work, the choice is unquestionably for the latter. Engineers spend their lives in gaining experience and education with practical matters, but they study the theory only once.

It is difficult to write on the subject of the professions in applied science without a clear understanding of the distinction between an occupation and a profession. This is not always kept in view by educators themselves, and even the courses planned out by them add to the confusion. The early years of the Worcester Polytechnic Institute afford very strong evidence of either difference of views or of a confusion as to what would fairly constitute a profession. The school was founded in 1865 for the purpose, as the founder stated, of training men for practical life, especially, "such as are intending to be mechanics or manufacturers, or farmers". This seems to indicate that the school was to be an advanced vocational school. Yet the list of the courses set down in the early days was clearly adapted for the professions.

of mechanical and civil engineering. Later on, the courses for the professions of chemistry and electrical engineering were introduced. For many years after the foundation, the classes were required to pass through an apprenticeship stage, quite similar to that found in any trade or vocational school. It was not until thirty years after the charter had been granted that the Institute placed itself squarely on the side of the professions, and adopted a four-year course for engineers and chemists. The slowness with which it developed indicates a considerable divergence of opinion in the minds of its faculty on the subject of what really constituted an education for practical life, and what constituted preparation for a profession in connection with applied science.

All professions have begun more or less as occupations, and have become professions by the development of principles and rules that must be learned before a man is really considered an adept. The self-made man, without college education, is no exception to this, as his knowledge of principles and rules is acquired only in the hard school of experience and in the study of books produced by better-educated men. When we think of the professions, we must recognize that in a certain sense all professions, except the ministry, are coming more and more under the aegis of science, and the methods adopted in scientific research are now generally applied to the study even of history and literature. Yet the term "applied science" is here limited to those applications based almost wholly upon the investigation of materials and forces of nature. This is essentially the difference between the profession of law, of medicine, of teaching, of business as distinguished from engineering, agriculture and chemistry. Architecture stands in a place by itself. The first occupation of man on this planet was dealing with the forces and materials that nature placed around him. In this sense, engineering and agriculture as occupations have existed from the earliest times. While they were thus the oldest of our occupations, they are the newest of our professions. Man owes his development to the constant struggle against nature. We can, therefore, classify agriculture and engineering as professions, only because both of them have accumulated by long experience that code of rules and that library of scientific principles so nec-

essary as the basis of any profession. In connection with agriculture, forestry necessarily takes its place as essential to the proper utilization of the soil. These two professions must eventually become more or less state-supported, because few farmers can afford the expense of advice on the management and care of their farms. As professional advisers acquire the confidence of the public and demonstrate beyond question their qualifications to solve all problems relating to the soil, they will take a very large part in our governmental system.

The lack of agreement among educators has left, in the present loose system, four roads by which a young man may enter the profession of engineering:

1. The older method, by apprenticeship in a shop or in the field, after an early education in the grammar or high school

2. Apprenticeship in some industry, after a college education without technical study

3. A four years' course in some school of technology or in the scientific department of a university, followed by a modified form of apprenticeship in some practical field

4. A general education in some college, followed by post graduate study in a technical school or in the technical department of a university

The first and last of these represent the two extremes. One is disappearing and the other is on trial as the most modern method of recruiting the profession. Nevertheless, some men will always be superior to the classification of teachers, or rather to the road over which they travel. They will be independent of schools and conventional systems, but for the ordinary American boy who is looking to engineering for a living, the third road is the most definite. It must be followed to a sufficiently good fundamental education in applied science to give the boy at least his novitiate in the profession.

It is doubtful if any sweeping generalization can be made with regard to the last two methods. There is a vague impression that college education, followed by the study of technical science, yields the broader man, but the result is too much involved in the capacity of the individual to justify any dogmatic statement on the subject at present.

The undergraduate and the graduate study of engineering can each justify itself. The first demands from four to five years and the second about two years longer. Both may be followed in the same school, whether exclusively technical or the scientific department of a university. The school of engineering that admits only young men holding a degree from some college cannot be classified here. There are too few graduates to afford any satisfactory conclusion. The degree accepted may be anything from the bachelor of science in a purely technical school to the bachelor of arts based upon the study of mathematics and the classics. The wide range of subjects between these two extremes leads to some difficulty in the classification of incoming students. Some students may require only one year and others the full four years to get through. There is, unfortunately, no clear line of division between undergraduate and graduate studies, as in going from an academic department to the law or medical school. The fundamental subjects for applied science are quite definite,—mathematics, physics and chemistry. The line where pure science leaves off and applied science begins cannot be drawn, hence a technical course is only a continuation of many schedules of studies found in colleges of liberal arts. The schools of technology represent a frank recognition of this fact. Graduate schools of engineering must always accept a wide range of preparation in their students, and must provide for it in preparatory years or in definite examinations for admission. For the average boy who must get to work as soon as possible, the technical, or scientific, school will always supply the natural preparation for graduate work in applied science. It is very doubtful if a graduate school is the best place for the average boy. The workshop, drafting room, or field is his graduate school. There will always be some, however, who find their proper place in graduate study, as investigators, teachers, and men with marked aptitude for special branches of science.

No reference has been made to a graduate school where nothing but professional courses are given. There are none in the United States, probably on account of the great endowment required to pay expenses. In such a school, the number of students would be few, but their contributions to applied science would be large, and the public would reap admirable service

from them. It would be possible to establish such a school, with the Bureau of Standards at Washington as a centre about which to form. The money spent by the Government would be amply returned and many of our young men could become enthusiastic investigators and teachers under such auspices. It is important to keep in mind the distinction between this type of school and what has been referred to as a graduate school, receiving students with degrees from any kind of college. Of one thing, engineers may be certain,—a school for real graduate work in engineering is not likely to flourish in a university where either politics or lack of understanding lead to fatal vacillation.

There is some general agreement as to what a technical school ought to have in its curriculum, but in the desire to do as much as possible for their students, the teachers often overcrowd them. In most cases, where courses are found too difficult for boys prepared in the high schools, it is from over-crowding rather than from over-loading; the distinction between these two words being that the former is applied here to too great a variety of work at the same time with hours badly arranged, and the latter is used in the sense of too many hours.

The tendency of technical schools towards schedules of study made up of scraps is bad in most respects. Any student who has to keep too many separate things in his mind at the same time is likely to be crammed for examinations and superficial in his knowledge. In some of the American technical institutions there are as high as twelve or thirteen studies going on at the same time for the same boy. Of course, it proceeds upon the amiable theory that a graduate must be prepared in as many directions as possible, so that he may be ready to take advantage of every opportunity after graduation; but our schools should remember and the employers of young engineers ought to understand that no graduate is a veteran in science. He must learn his specialty and his profession in contact with things that are being done and with men who are doing them. The most that any student can do, therefore, is to be ready to enter his novitiate or apprenticeship after graduation. The sooner this is fully recognized and the sooner the logical consequences are worked out, the better it will be for the engineering profession. Many of our schools ought without delay to reduce the number of subjects given at the same

time. This can be accomplished in several ways; one is by absorbing the scraps into larger courses; another is by dividing each term into two parts and concentrating courses in each part, instead of letting them run through the whole term; and the last is by lopping off some of the work that is now given. A schedule of studies covering four years should hardly extend beyond the foundation upon which the sciences or the professions of engineering are based.

For the purpose of exhibiting at a glance the ordinary schedule of studies in American technical schools, a few diagrams have been prepared as shown in Numbers 1 to 8. They are taken from the Massachusetts Institute of Technology, the largest technical school in the country; from the engineering department of Michigan University; and from the Worcester Polytechnic Institute, one of the smaller technical schools, like Rensselaer, Stevens, and Case. For convenience of comparison and reference, the studies are divided into six groups:

1. Language, History, Government and Economics
2. Mathematics, Chemistry, Physics and other subjects taught as pure science and not as special applications to professional practice
3. Applied Science, including that given to all engineers and that for the special branches of engineering
4. Drafting, Descriptive Geometry and Elementary Designing of Machinery and Structures
5. Workshop, Surveying and those laboratory courses intended primarily to teach the use of instruments and tools
6. Summer Practice
7. Physical and Military Training

The relative amount of work in each of these groups may be measured by the number of hours of exercises when the student is present in the classroom and the laboratory, or by the total number of hours he must give to the subject, including preparation and study at home. The first of these may be put down from almost any college catalogue, but the second is somewhat elusive. Some schools, like the Massachusetts Institute of Technology and the Worcester Polytechnic Institute, give in the catalogue the number of hours of preparation as well as the hours of exercise.

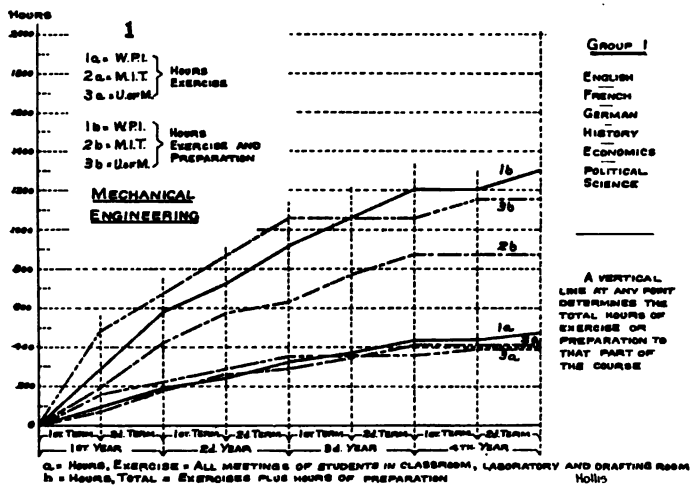
Hours
1
1a = W.P.I.
2a = M.I.T.
3a = U. of M.
Hours Exercise
1b = W.P.I.
2b = M.I.T.
3b = U. of M.
Hours Exercise and Preparation
Mechanical Engineering
1b
3b
2b
1a
2a
3a
1st Term
2d Term
1st Year
2d Year
3d Year
4th Year
Group 1
English
French
German
History
Economics
Political Science
A vertical line at any point determines the total hours of exercise or preparation to that part of the course
a = Hours, Exercise = All meetings of students in classroom, laboratory and drafting room
b = Hours, Total = Exercises plus hours of preparation
Hollis

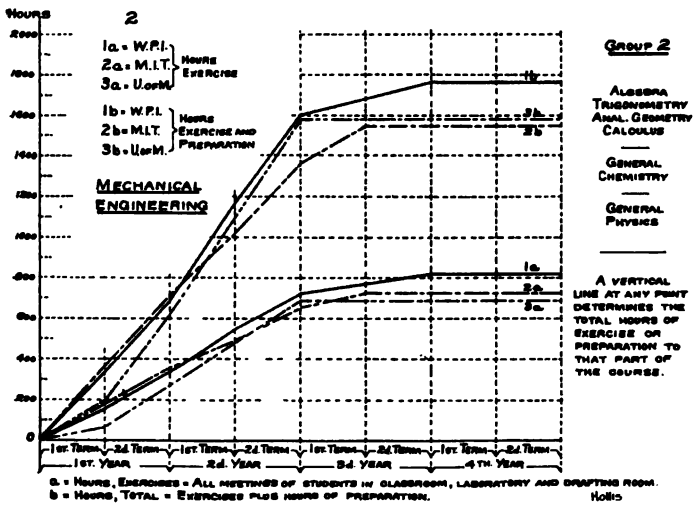
Hours
2
1a = W.P.I.
2a = M.I.T.
3a = U. of M.
Hours Exercise
1b = W.P.I.
2b = M.I.T.
3b = U. of M.
Hours Exercise and Preparation
Mechanical Engineering
1b
2b
3b
1a
2a
3a
1st Term
2d Term
1st Year
2d Year
3d Year
4th Year
Group 2
Algebra
Trigonometry
Anal. Geometry
Calculus
General Chemistry
General Physics
A vertical line at any point determines the total hours of exercise or preparation to that part of the course.
a = Hours, Exercises = All meetings of students in classroom, laboratory and drafting room.
b = Hours, Total = Exercises plus hours of preparation.
Hollis

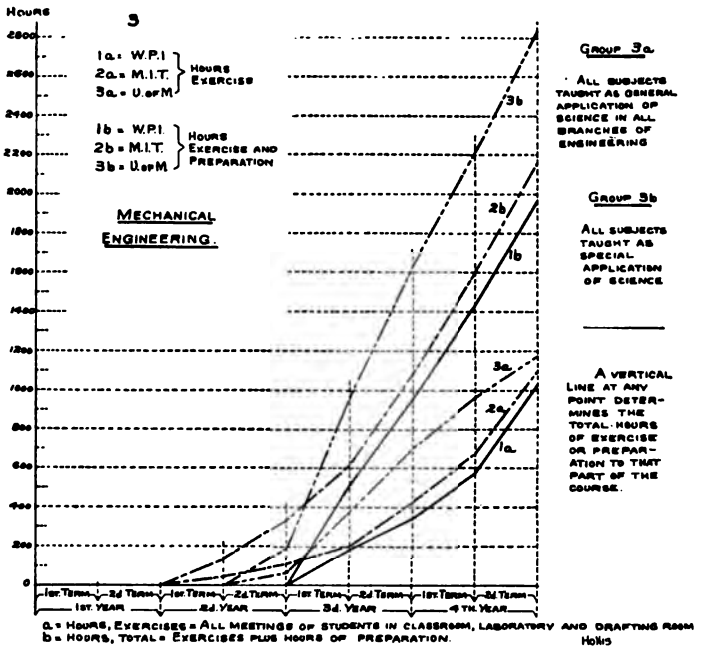
HOURS
3
1a = W.P.I.
2a = M.I.T.
3a = U. of M.
HOURS EXERCISE
1b = W.P.I.
2b = M.I.T.
3b = U. of M.
HOURS EXERCISE AND PREPARATION
MECHANICAL ENGINEERING.
GROUP 3a.
ALL SUBJECTS TAUGHT AS GENERAL APPLICATION OF SCIENCE IN ALL BRANCHES OF ENGINEERING
GROUP 3b
ALL SUBJECTS TAUGHT AS SPECIAL APPLICATION OF SCIENCE
A VERTICAL LINE AT ANY POINT DETERMINES THE TOTAL HOURS OF EXERCISE OR PREPARATION TO THAT PART OF THE COURSE.
1st TERM
2d TERM
1st YEAR
2d YEAR
3d YEAR
4TH YEAR
a = HOURS, EXERCISES = ALL MEETINGS OF STUDENTS IN CLASSROOM, LABORATORY AND DRAFTING ROOM
b = HOURS, TOTAL = EXERCISES PLUS HOURS OF PREPARATION.
Hollis

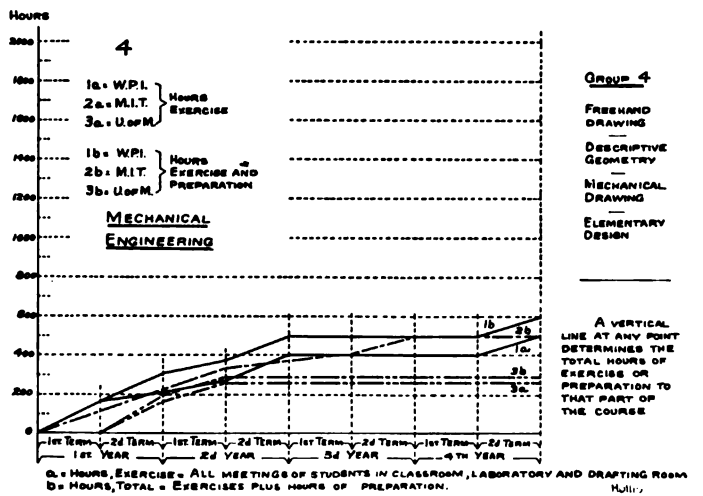
HOURS
4
1a = W.P.I.
2a = M.I.T.
3a = U. of M.
HOURS EXERCISE
1b = W.P.I.
2b = M.I.T.
3b = U. of M.
HOURS EXERCISE AND PREPARATION
MECHANICAL ENGINEERING
GROUP 4
FREEHAND DRAWING
DESCRIPTIVE GEOMETRY
MECHANICAL DRAWING
ELEMENTARY DESIGN
A VERTICAL LINE AT ANY POINT DETERMINES THE TOTAL HOURS OF EXERCISE OR PREPARATION TO THAT PART OF THE COURSE
1st TERM
2d TERM
1st YEAR
2d YEAR
3d YEAR
4TH YEAR
a = HOURS, EXERCISE = ALL MEETINGS OF STUDENTS IN CLASSROOM, LABORATORY AND DRAFTING ROOM
b = HOURS, TOTAL = EXERCISES PLUS HOURS OF PREPARATION.
Hollis

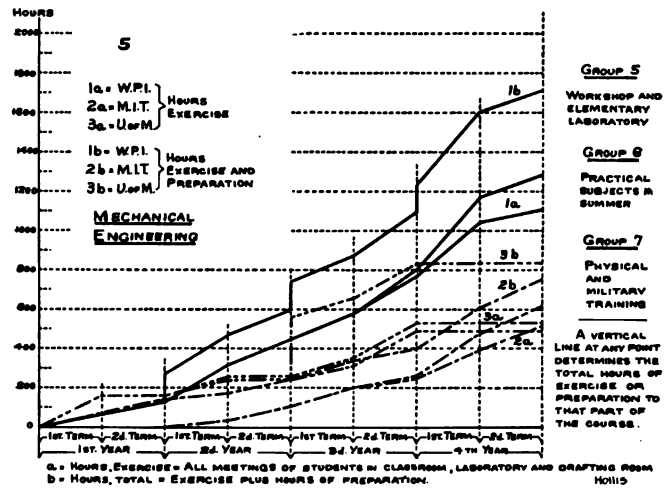
HOURS
5
1a = W.P.I. } HOURS EXERCISE
2a = M.I.T.
3a = U. of M.
1b = W.P.I. } HOURS EXERCISE AND PREPARATION
2b = M.I.T.
3b = U. of M.
MECHANICAL ENGINEERING
1b
1a
3b
2b
3a
2a
GROUP 5
WORKSHOP AND ELEMENTARY LABORATORY
GROUP 6
PRACTICAL SUBJECTS IN SUMMER
GROUP 7
PHYSICAL AND MILITARY TRAINING
A VERTICAL LINE AT ANY POINT DETERMINES THE TOTAL HOURS OF EXERCISE OR PREPARATION TO THAT PART OF THE COURSE.
1ST TERM
2d. TERM
1ST YEAR
2d. YEAR
3d. YEAR
4TH YEAR
a = HOURS, EXERCISE = ALL MEETINGS OF STUDENTS IN CLASSROOM, LABORATORY AND DRAFTING ROOM
b = HOURS, TOTAL = EXERCISE PLUS HOURS OF PREPARATION.
Hollis

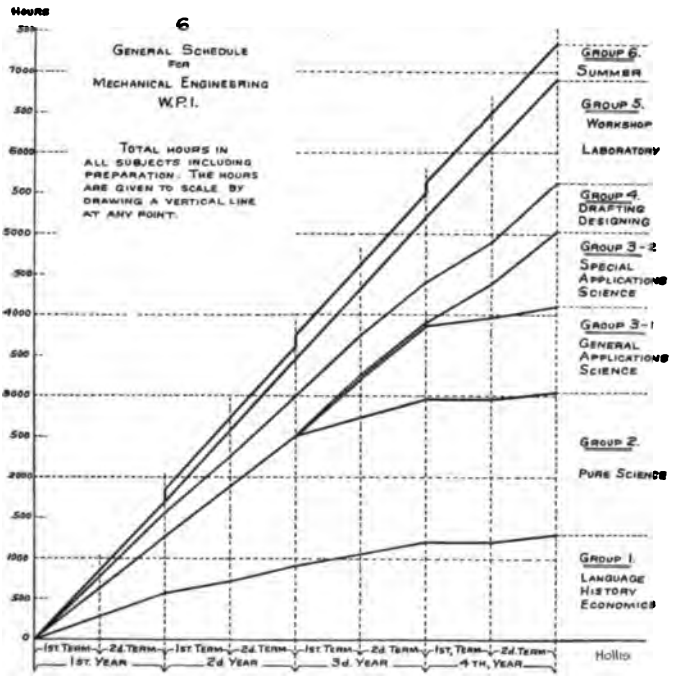
HOURS
6
GENERAL SCHEDULE FOR MECHANICAL ENGINEERING W.P.I.
TOTAL HOURS IN ALL SUBJECTS INCLUDING PREPARATION. THE HOURS ARE GIVEN TO SCALE BY DRAWING A VERTICAL LINE AT ANY POINT.
GROUP 6. SUMMER
GROUP 5. WORKSHOP LABORATORY
GROUP 4. DRAFTING DESIGNING
GROUP 3-2 SPECIAL APPLICATIONS SCIENCE
GROUP 3-1 GENERAL APPLICATIONS SCIENCE
GROUP 2. PURE SCIENCE
GROUP 1. LANGUAGE HISTORY ECONOMICS
1ST TERM
2d. TERM
1ST YEAR
2d. YEAR
3d. YEAR
4TH. YEAR
Hollis

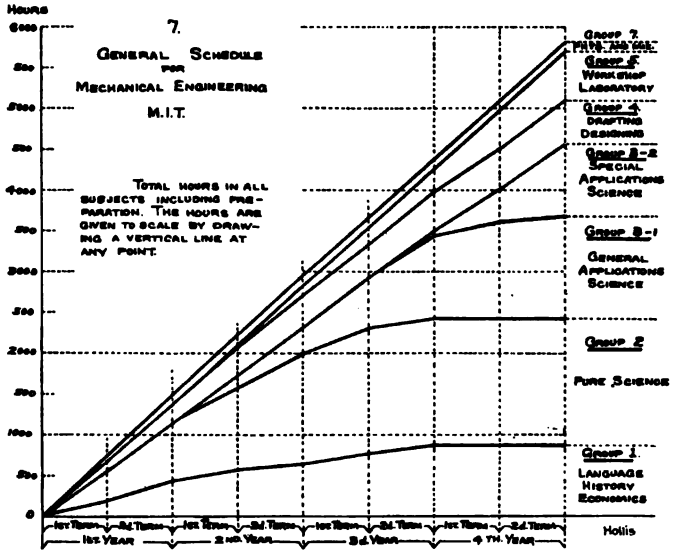
HOURS
7.
GENERAL SCHEDULE FOR MECHANICAL ENGINEERING M.I.T.
TOTAL HOURS IN ALL SUBJECTS INCLUDING PREPARATION. THE HOURS ARE GIVEN TO SCALE BY DRAWING A VERTICAL LINE AT ANY POINT.
GROUP 5 WORKSHOP LABORATORY
GROUP 4 DRAFTING DESIGNING
GROUP 3-2 SPECIAL APPLICATIONS SCIENCE
GROUP 3-1 GENERAL APPLICATIONS SCIENCE
GROUP 2 PURE SCIENCE
GROUP 1 LANGUAGE HISTORY ECONOMICS
1st YEAR
2nd YEAR
3d YEAR
4TH YEAR
Hollis

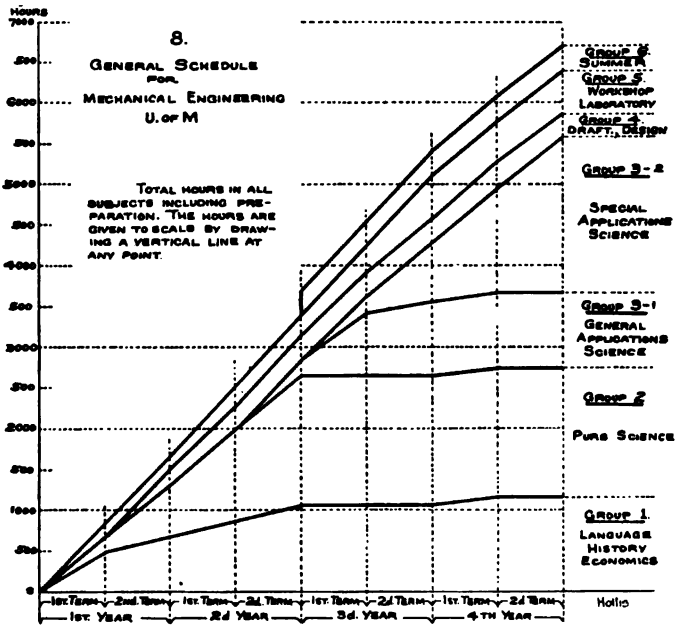
HOURS
8.
GENERAL SCHEDULE FOR MECHANICAL ENGINEERING U. OF M
TOTAL HOURS IN ALL SUBJECTS INCLUDING PREPARATION. THE HOURS ARE GIVEN TO SCALE BY DRAWING A VERTICAL LINE AT ANY POINT.
GROUP 6 SUMMER
GROUP 5 WORKSHOP LABORATORY
GROUP 4 DRAFT. DESIGN
GROUP 3-2 SPECIAL APPLICATIONS SCIENCE
GROUP 3-1 GENERAL APPLICATIONS SCIENCE
GROUP 2 PURE SCIENCE
GROUP 1 LANGUAGE HISTORY ECONOMICS
1st YEAR
2d YEAR
3d. YEAR
4TH YEAR
Hollis

The time required for preparation, writing reports, working problems and, in general, for all that would be classified as home work, is usually based upon the judgment of professors, checked up, more or less, by consultation with students. Such information is not altogether reliable, as students vary a great deal in their ability to assimilate the school instruction, and classes vary greatly in their collective power. However, if the upper-class men have been taken into the confidence of their instructors, the tabulation of preparation for each course is accurate enough to serve two very useful purposes. First, it enables the faculty to allot a proper amount of time to each subject and to see that the zeal of an instructor does not lead him to excessive demands. Roughly speaking, every lecture or recitation hour requires about two hours of preparation, and every laboratory course only enough time to write up reports. For the Massachusetts Institute of Technology and the Worcester Polytechnic Institute, the hours are all stated with accuracy and definiteness in the catalogue. For Michigan University, the information has been obtained from the Engineering Department. Mechanical Engineering has been selected for publication on account of the workshop courses, but the general conclusions do not differ from those reached in Civil and Electrical Engineering. The diagrams are plotted by laying off horizontally the four years, with two terms of about sixteen weeks in each of them. At the end of each term, the sum of the hours for each group, back to the beginning of the four years' course, is plotted vertically so that any vertical line determines the total amount of work in the course up to that time. The number of hours for any one term is found by taking the difference between the reading at the beginning and at the end of the term.

A set of these diagrams shows that the proportion of liberal education and special technical informational study in these groups varies little with the institution, except in the workshop. The first two groups will be found in all colleges, and they constitute a large part of the instruction during the first two years of a technical school. Furthermore, they make up a very large fraction of the whole body of instruction. For example, in the Massachusetts Institute of Technology and the Worcester Polytechnic Institute, the one a large technical school on a university

scale, and the other a smaller technical school on a college scale, the percentage is easily found. Including the hours of preparation, the two groups require 2415 hours at M. I. T. and 2964 hours at W. P. I., with percentages respectively of 41.4 and 44.1.

The third group is nothing but advanced or applied physics and mathematics. It differs from these subjects as taught in non-technical schools only in the point of view, and in the detail with which they are worked out. In engineering, small decimals are rarely necessary on account of the large commercial scale on which work must be done, while in the pure science very great accuracy is found essential. Furthermore, in the industries, unusual accuracy of calculation may have to yield to standard forms produced in the process of manufacture and the factor of safety is usually large. It does not follow that advanced physics and mathematics taught in a technical school are less enlarging because they are studied with a definite application in view. The difference in result is too often due to a difference in the spirit of the teachers. Physics can be made either broad or narrow, and if taught as merely a set of problems, it may become very markedly the latter. There should never be narrowness on the part of physicists or mathematicians any more than on the part of engineers. Each must strive to understand the problems and methods of the other. If a technical school is weak in its department of physics, its teaching of professional subjects is also likely to be weak.

In the diagrams, the number of hours in Group 3 is 2165 for M. I. T. and 1904 for W. P. I., making in all for the first three groups 4580 and 4868 respectively, the percentages being 78.6 and 75.3. These percentages are figured on the total number of hours of work in the year, excluding the summer practice, which is relatively large in the case of the Worcester Polytechnic Institute. Thus, it will appear that Groups 4, 5 and 6 have respectively 21.4 and 24.7 per cent of the total, if summer work be excluded. If the hours of preparation are correctly stated, then these two schools are about the same, and it will be found that the western schools have in general very nearly the same percentages given to each group.

There are several theories of education that have a distinct relation to the success or failure of a technical school. One of

them is to be found in the graduate departments of our larger universities. A student has comparative freedom. He may study what he likes and attend when he likes. The only limitation placed upon him relates to residence and the general responsibility to some department. He is judged only by the results of his study and investigation.

Another theory is found in some technical schools where every subject is carefully prescribed, and, one might almost say, where every footstep is marked out for the boy. He may have no volition except in the number of hours given to his home study, and even then he is checked up by numerous tests and recitations. West Point and Annapolis set the limit in this direction.

Neither of these extremes seems to be well adapted to the modern American college, specially to the technical college with its mixture of undergraduate and professional studies. Where a student has been confined too much to a cast iron schedule, he is likely to come out with a lack of initiative and confidence in himself. He will, for a few years, always be waiting for orders. The rigid prescription may be well for the military and naval academies where every graduate has a commission and lifelong guidance ahead of him, but, even there, it is doubtful if the system gives us the best officers. The standards of education at these schools are too often confused with the discipline and self-control taught before everything else. It is entirely right that a civilian school should have its standard of excellence and its minimum of work for a degree, but a prescription allowing no freedom of action or choice for four years is dwarfing. Its tendency to produce only routine men is harmful to the technical schools and to the profession of engineering. If the students were kept under supervision within brick walls, the discipline might offset the lack of initiative, but they cannot be held in that way. They are subject to home, fraternity and outside influences over which their teachers have no control whatever. The best remedy for this condition is not rigid prescription of studies but greater freedom of choice, especially in the upper years of the school course.

The common answer, that this is letting down the bars, is met by the experience that it is also improving the instruction in the classroom, and enabling an instructor to maintain his own

standards better. Any election, or freedom of choice in studies leads to greater expense and most schools are restrained by a limited endowment, so that the suggestion that every technical school should have elective courses is not always practicable. Furthermore, there would be no general agreement as to what the elective courses should be. In the schools where such courses are offered, or permitted, the choice for a student in one branch of engineering is usually a technical subject in some other branch, rarely a non-technical subject of enlarging quality.

One of the serious criticisms against technical education relates to the minute specialization which often begins before the students have really mastered the fundamentals. The first year is made the same, in many schools, for all branches of science as a concession to this criticism, but teachers may very well ask themselves if the process has gone far enough. The tendency to meet the employer with a full-fledged engineer is almost irresistible, and yet every teacher knows that a young graduate must ordinarily expect to spend a year or two in an apprenticeship before he can be of much use. Since that must always be true, why should not the ordinary schedule allot less time to technical information and more time to the fundamentals of engineering and to good citizenship? The plans recently published by the Engineering Department of Johns Hopkins, in which the first three years are to be the same for all branches of engineering, present a very interesting experiment. If it succeeds, and it deserves to succeed, the university may do for technical education as much as it did under President Gilman for graduate instruction in all other universities.

Another valid criticism against technical education is the lack of cooperation among the schools and faculties. The Society for the Promotion of Engineering Education was formed for mutual help and discussion, but it has led to little that might not have been accomplished without it. The schools still go their own way, each one reaching out to be complete in itself, like a great department store. Machinery, laboratories, and instruction are duplicated without even a thought of letting any institution have its own personality and its own equipment. It is, after all, the competition of trade that has crept into our education, and every teacher ought to strive to get rid of it. Emulation in

good work is one thing, but the struggle to attract or grab students is quite another. The publicity agent is only part of the whole disagreeable business. Our schools should not be factories, but rather the home of American aspiration as to character and achievement. Every cent spent in advertisement is a surrender of educational ideals.

The size of salaries paid to professors and instructors must have an important bearing upon the spirit and efficiency of a technical school. Many give themselves to their teaching with heroic self-sacrifice, but teachers must live. They will, in ordinary circumstances, go where they can do their work under most comfortable conditions. The salary list will therefore be a rough measure of the school's place in our educational system. On the whole, the average technical school is probably better off in this respect than the average college, but it is not as well off as it should be. The industries pay so much more for the service of good engineers, that the teaching profession is in a measure robbed of its best blood. Hence, the custom of permitting professors in technical schools to take outside work has become common, to the detriment of the teaching. The plea that the students must be kept up with the times by a wide-awake professor is entirely convincing to those who can pay only small salaries. Outside work on a considerable scale interferes seriously with classroom work, and the teacher who divides his work and his interests in that way is never so useful to an institution as one whose thought and time are wholly given over to the students.

The literature of engineering has suffered from small salaries and want of leisure. America has produced very few technical books that are not superficial and hasty. Neither the over-worked professor who does no outside work, nor the outside engineer who is brought in for a little teaching and much advertisement, has the time to spare for research and writing. All this bespeaks the importance of good living salaries and leisure for every professor.

Note: All discussion pertaining to Engineering Education will be found following Paper No. 233.

Paper No. 233

SOME CONSIDERATIONS REGARDING ENGINEERING EDUCATION IN AMERICA.

By

GEORGE F. SWAIN
Past-President Am. Soc. C. E., Mem. Am. Soc. M. E.
Professor of Civil Engineering, Harvard University
Cambridge, Mass., U. S. A.

This paper is not a complete discussion of engineering education, or of any phase of it. It only discusses the general tendency and development of engineering education in this country, and touches a few salient points. By engineering education is meant the higher training of engineers, and no reference will be made to trade or vocational schools.

The development of engineering education in America, as would naturally be expected, took place more slowly than in Continental Europe. The early American engineers were, for the most part, men untrained in colleges, but trained in that institution which is the best school of all, namely, the school of life. Notwithstanding this, their work, like that of the early English engineers, could not be improved upon, and demonstrates conclusively that while colleges may assist a man to get his education, the only true education is self-education, whether obtained at college or elsewhere.

At the time of the Declaration of Independence there were only two professional schools in the United States, the Medical College in Philadelphia (afterwards the Medical School of the University of Pennsylvania) and the Medical School of Kings College (afterwards Columbia University). The Harvard Medical School was established in 1782, since which time medical schools have greatly multiplied. The first law school in America was not connected with any college and was established in 1784 at Litchfield, Conn., but was discontinued in 1833. The Harvard

Law School was established in 1817 and was the first to be connected with a university and authorized to confer degrees in law. It was followed by the establishment of the Yale Law School in 1824, that of the University of Virginia in 1825, of the University of Cincinnati in 1833, and of Columbia University in 1858. In 1901 there were eighty-six law schools in the United States, with a total of 11,883 students.

The first engineering school in this country was the Rensselaer Polytechnic Institute at Troy, N. Y., which was organized in 1824. The Sheffield Scientific School at Yale was established in 1847, and the Lawrence Scientific School of Harvard University in 1850, and these were followed by the Massachusetts Institute of Technology in 1865, and the Worcester Academy Free Institute, now the Worcester Polytechnic Institute, in the same year. Since that time the number of schools and students has greatly increased. The following statistics relate to professional schools in 1905:

	Theological Schools	Law Schools	Medical Schools	Schools of Conferring Technology only B. S. Degrees
Number of institutions	156	96	148	44
Teachers	1,094	1,190	5,465	1,865
Students	7,580	14,714	25,835	16,110

Technical schools were organized in Europe much earlier than this. The Ecole des Ponts et Chaussées was established in 1747 under the direction of Perronet, who continued its director for forty-seven years. In 1748, the Ecole Polytechnique was founded, giving a general scientific training preparatory to the engineering school. The Ecole Centrale des Arts et Manufactures in Paris was established in 1829, the Polytechnisches Institut in Vienna in 1815, the Mining School at Freiberg, Germany, in 1765, and some other technical schools in Germany before 1835. The first Chair of Civil Engineering and Mechanics in the University of Glasgow was established in 1840, the School of Engineering in Dublin University in 1842.

Law, theology and medicine had, as is well known, been taught for centuries in the universities of Europe. From these

statements it is clear that engineering schools in this country as well as abroad, are of later growth than schools for training in the other so-called learned professions, and that engineering schools in this country were established much later than similar schools abroad.

The later developments in engineering schools, however, are widely accounted for by the comparatively recent growth of applied science, and the tardy reception of the fact that engineering is a science as well as an art. When we remember that Newton's laws of motion were only formulated in 1687; that Galileo in 1638 held a theory governing the flexure of simple beams which violated the fundamental principles of statics; that the principle governing the truss bridge was not fully understood up to about the middle of the last century; and that most of the modern developments in the theory of structures, as well as in electrical engineering, sanitary engineering, and other branches, have been entirely developed since that time, the comparatively late development of engineering schools is easily understood.

At the Rensselaer Polytechnic Institute, the first to be established, the curriculum of that date (1826) is outlined in the following circular issued by the trustees:

> "Article 1. The course of exercise at said school in the Fall Term shall be, as nearly as circumstances shall permit, as follows: Each student shall give five lectures each week on systematic botany, demonstrated with specimens, for the first three weeks, and shall either collect, analyze and preserve specimens of plants, or examine the operations of artists and manufacturers at the school workshops, under the direction of a professor or assistant, who shall explain the scientific principles upon which such operations depend, four hours on each of six days in every week, unless excused by a professor on account of the weather, ill-health, or other sufficient cause. For the remaining twelve weeks, each student shall give fifteen lectures on mineralogy and zoology, demonstrated with specimens; fifteen lectures on chemical powers and substances not metallic; fifteen lectures on natural philosophy, including astronomy; and fifteen lectures on metalloids, metals, soils, manures, mineral waters, and animal and vegetable matter—all to be fully illustrated

with experiments performed with his own hands; and shall examine the operations of artists at the school workshops, under the direction of a professor or assistant, four hours on every Saturday, unless excused as aforesaid.

"Article 2. During the Winter Term students shall recite, to a professor or to a competent assistant, the elements of the sciences taught in the fall and spring terms; and shall study and recite, as auxiliary branches in aid of these sciences, rhetoric, logic, geography, and as much mathematics as the faculty shall deem necessary for studying land surveying, common mensuration, and for performing the common astronomical calculations.

"Article 3. The course of exercises in the Spring Term shall be, as nearly as circumstances will admit, as follows: Each student shall, during the first six weeks, give ten lectures on experimental philosophy; ten lectures on chemical powers and on substances not metallic; and ten lectures on metalloids, metals, soils and mineral waters. For the remainder of the term each student shall be exercised in the application of the sciences before enumerated to the analysis of particular selected specimens of soils, manures, animal and vegetable substances, ores, and mineral waters; and shall devote four hours each day, unless excused by one of the faculty, to the examination of the operations of the agriculturists on the school farms, together with the progress of cultivated grains, grasses, fruit trees, and other plants, to practical land-surveying and general mensuration, to calculations upon the application of water-power and steam which is made to the various machines in the vicinity of the school, and to an examination of the laws of hydrostatics and hydrodynamics which are exemplified by the locks, canals, aqueducts, and natural waterfalls surrounding the institution".

The first mention of a Civil Engineering course is in the catalogue of 1828, and the first complete curriculum in that subject had been established by 1835, in which year the School issued a circular which is believed to be the first prospectus of a school of engineering ever printed in English. This circular contains the following statement with regard to the instruction in engineering:

"Students of the Engineering Corps are instructed as follows:

"Eight weeks, in learning the use of Instruments; as Compass, Chain, Scale, Protractor, Dividers, Level, Quadrant, Sextant, Barometer, Hydrometer, Hygrometer, Pluviometer, Thermometer, Telescope, Microscope, etc., with their applications to Surveying, Protracting, Leveling, calculating Excavations and Embankments, taking Heights and Distances, Specific Gravity and Weight of Liquids, Degree of Moisture, Storms, Temperature, Latitude and Longitude by lunar observations and eclipses.

"Eight weeks, Mechanical Powers, Circles, Conic Sections, construction of Bridges, Arches, Piers, Rail-Roads, Canals, running Circles for Rail-Ways, correcting the errors of long Levels, caused by refraction and the Earth's convexity, calculating the height of the atmosphere by twilight, and its whole weight on any given portion of the Earth, its pressure on Hills and in Valleys as affecting the height for fixing the lower valve of a Pump; in calculating the Moon's distance by its horizontal parallax, and the distances of Planets by proportionals of cubes of times to squares of distances.

"Four weeks, in calculating the quantity of Water per second, etc., supplied by streams for feeders for Canals, or for turning Machinery; in calculating the velocity and quantity effused per second, etc., from flumes and various vessels, under various heads; the results of various accelerating and retarding forces of water flowing in open raceways and pipes of waterworks, and in numerous miscellaneous calculations respecting Hydrostatics and Hydrodynamics.

"Four weeks, study the effect of Steam and inspect its various applications—Wind, as applied to Machinery; also Electro-Magnetism—inspect the principal Mills, Factories and other Machinery or works which come within the province of Mathematical Arts; also, study as much Geology as may be required for judging of Rocks and Earth concerned in construction".

One year was sufficient for obtaining a Rensselaer degree of Civil Engineering. The fee was $4 for each sub-term of four

weeks, with no extra charge except $8 for the course in experimental chemistry given to the students of the Natural Science Department, candidates for the degree of bachelor of natural science. The degree was conferred on candidates of 17 years of age and upwards. The admission requirements appear to be covered by the statement "Candidates are admitted to the Institute who have a good knowledge of arithmetic and can understand good authors readily and can compose with considerable facility".

With regard to the Sheffield Scientific School, which had its beginning in 1846, formal announcement was made in the Yale College Catalogue of 1847, that a new department was being established under the term "Philosophy and the Arts". The new departure consisted primarily of a School of Applied Chemistry intended for graduate students. In the Catalogue of 1852 an announcement is made for the first time of the establishment of a "School of Engineering", so that at this particular date there were two departments in the so-called "Department of Philosophy and the Arts", namely, a "School of Applied Chemistry", and a "School of Engineering". The announcement in the Yale Catalogue of the year 1852-53 reads as follows:

"School of Engineering".

"The Course of Instruction embraces the following studies and exercises:

"Surveying, in all its branches, with the adjustment and use of instruments and operations in the field.

"Drawing—topographical, geometrical, mechanical, architectural; with shading and tinting.

"Descriptive Geometry—Shades and Shadows—Linear Perspective—Isometrical Projection; pursued in connection with systematic exercises in geometrical drawing.

"Applications of Descriptive Geometry to Masonry and Stone-cutting, in the construction of Arches, etc., and to Civil and Mechanical Engineering, generally.

"The Principles of Architecture.

"Analytical Geometry, and Differential and Integral Calculus.

"Mechanics, including Hydraulics and Pneumatics; Application of Mechanics to Machinery and Engineering.

"The Science of Construction in its various departments; with a discussion of the nature, strength, and mode of preparation of building materials.

"Engineering field-work; or the location of roads, surveys for excavations and embankments, etc. Use of astronomical instruments for the determination of time, latitude and longitude, etc.

"This course will occupy two years. Students will be admitted to pursue a full or a partial course, at their option.

"The Preparatory mathematical studies required for admission to the full course, are Arithmetic, Algebra, Geometry, and Trigonometry".

At Harvard University the Catalogue for 1848-49 contains the following statement:

"Engineering".

"It has not yet been in the power of the Corporation to fill this department. It will be brought into operation as soon as possible".

Apparently the first detailed account of this course appeared in the Catalogue for 1850-51, as follows:

"Professor Eustis will receive special students to the course of instruction in Engineering, who will give their attendance at the School from 9 o'clock A. M. to 5 o'clock P. M.

"The course will include instruction in:—

"Descriptive Geometry, with its application to masonry and stone-cutting, the construction of arches, etc.

"The theory of shades, shadows, and perspective, illustrated by a course of drawing, and mapping in all its branches.

"Surveying, with the use of the instruments, and actual operations in the field.

"The nature and properties of building materials, and their applications to the construction of railroads, canals, bridges, etc.

"For those who are not sufficiently prepared, the course will commence with a review of such parts of practical mathematics as may be required".

The Catalogue for 1851-52 contains the following statement:

"Professor Eustis will receive special students to the course of instruction in Engineering, who will give their attendance at the School from 9 o'clock A. M. to 5 o'clock P. M.

"The course will include instruction in:—

"Surveying, with the use of the instruments, and actual operations in the field.

"Drawing in all its branches; topographical, outline, shaded, and tinted, including Isometric Projections.

"Analytical Geometry and Differential and Integral Calculus.

"The principles of Mechanics, and their application to Machinery and Engineering".

"Descriptive Geometry.

"The theory of shades, shadows, and perspective.

"The applications of Descriptive Geometry to masonry and stone-cutting, in the construction of groined and cloistered arches, domes, etc.

"The nature and properties of building materials, and their applications to the construction of railroads, canals, bridges, etc.

"The instruction will be given by daily exercises at the blackboard and by lectures".

These curricula afforded scarcely more than what would now be considered a good elementary education. Nevertheless, the graduates of these schools were found equal to any emergency which crossed their paths, and it was men trained in this manner, or in the field, who built our railroad systems and many of our great municipal works.

By the end of the third quarter of the last century, our engineering schools had multiplied rapidly, but their curricula were still elementary in comparison with those of some of the German and French technical schools. Up to that time, or even perhaps up to within fifteen or twenty-five years, it was necessary for a student who desired to acquire the broadest and most thorough fundamental training in engineering theory and prac-

tice, to resort to Europe to complete his education. The French schools of engineering were not very hospitable to American students, and comparatively few Americans, therefore, went to Paris to study engineering. Large numbers, however, frequented the German technical schools, and these men returned to this country thoroughly equipped in the theoretical basis of their professional work. Large numbers of talented Germans and Frenchmen also sought this country to become citizens, and to take advantage of the great opportunities for the practice of engineering afforded by this comparatively new country.

In the last quarter of the last century, however, American schools began to develop with extreme rapidity, establishing courses in all branches of the science and inaugurating effective methods of instruction, in some cases, in advance of the European schools. The first course in Electrical Engineering was established at the Massachusetts Institute of Technology in 1883-84. The same Institution established in 1888-89, a course in Chemical Engineering, and in 1889-90, a course in Sanitary Engineering, and similar courses have since been established in many of our universities and technical schools.

Again, the laboratory method of instruction, now so fully developed everywhere, was first put into operation, in any systematic way, in the United States. Even up to the time of our Civil War, or later, chemistry was studied in our colleges entirely as a lecture-room subject. Some experiments were made by the professor in the presence of the students, but the latter received no training in experimental work, except in graduate courses. The Massachusetts Institute of Technology recognized from the beginning the importance of the laboratory method, even for undergraduates, not only in subjects like physics and chemistry, but in engineering; and, at a time when the German technical schools were offering little or no laboratory training, American schools had constructed efficient laboratories, which were used not only for research, but in which every student was required to acquire some practice in the manipulation of the apparatus and materials which formed the subject of his studies. Since that time, engineering schools the world over have recognized the value of laboratories, spacious buildings have been constructed both here and abroad, equipped with the most modern apparatus

and machinery for use by the students in connection with the various engineering courses.

While the development of technical curricula and of mechanical equipment has thus been extremely rapid in this country during the last thirty years, it is a question whether methods of teaching have correspondingly improved, or whether indeed they have improved at all. A generation or two ago it was recognized that education consisted in drill, discipline, and self-culture. Of late years, however, there appears to have been a tendency to consider it to consist of listening to lectures. The lecture system, the characteristic feature even now of foreign schools, has apparently steadily grown in this country, until the prevailing impression is that all that a college professor does is to lecture. The writer considers this tendency—if he is correct in conceiving that it is a tendency—to be an unfortunate one, and that much would be gained in some of our colleges and technical schools, or in some of the courses therein, in going back to the old ideas of discipline, recitation, and work by the student, in place of the too prevailing practice of work mainly by the professor.

Another unfortunate tendency has accompanied the great development of engineering science and the establishment of a greater number of courses and subjects of study, and that is the endeavor to crowd a constantly increasing amount of work into the same space of time. It seems to have been too often forgotten that a four years' course, like a measure of volume, can only hold a fixed amount. In order to get into our engineering curricula, therefore, an increasing number of subjects, one or both of two alternatives become necessary, namely: either to crowd out some of the subjects previously taught, or to crowd in others at the expense of the time formerly devoted to those already existing. In other words, something had to be crowded out or the pressure had to be increased. The result has been, in the case of students who could only afford to take the standard college course of four years, a narrowing and one-sided training, or a superficial knowledge, or both.

Notwithstanding, therefore, the great development of our technical schools in physical resources, it may well be doubted whether the results obtained are as good as they were two generations ago, or whether we are now turning out men who are really

any better qualified to develop into capable engineers than we did two generations ago. This appears to be particularly true in view of the fact that the phenomenon just discussed is not only observable in our technical schools and colleges, but in our primary and secondary educational institutions. Thoroughness, the development of initiative and the habit of reflection, seem to have been largely replaced by a smattering of many things.

The above tendencies have been accelerated and accentuated by the extension to the young and immature of the ideals of personal freedom and individual equality, so generally held up to admiration as the peculiar characteristics of a democratic form of government. The tendency certainly has been to substitute academic freedom for academic restraint and discipline. Perhaps the result has been good, on the whole, but the writer is one of those who disbelieves this. Education is a preparation for a vocation, perhaps, but, more than that, it is a preparation for life; and life requires not only the development of initiative, but the ability to submit to discipline, to realize responsibility, to obey orders and to accomplish unpleasant tasks cheerfully and well. Education in this country today does not seem well calculated for these latter purposes; it rather trains young men to be intellectually arrogant, intolerant of others, unwilling to learn from those who have experience behind them, and to be a fit preparation for the great American game of bluff rather than for a modest, efficient, and successful life. Of course these things, like almost all things that form the matter of subjects like education, economics, history, politics, government, etc., are incapable of exact determination. The statement can never be verified nor conclusively demonstrated that present-day education is better or worse than that of the past, because the question is not whether the graduates of our schools today, or any large proportion of them, achieve success, but whether the same man exposed to the same conditions would succeed better with our present education or with that of former years. Subjects of the class that we are now considering differ from those in physics and mathematical science, not only in that the conclusions reached are, in general, unverifiable, but in the fact that effects are due to a plurality of causes rather than to a single cause. These peculiarities render

dogmatic statements on any of these subjects in bad taste and open to serious question.

Noticeable, however, is the fact that in the crowding out process, which has been referred to, some subjects have been displaced which were formerly considered among the most valuable subjects for educational discipline. Among these may be mentioned formal logic which (though included in the first course at the Rensselaer Polytechnic Institute) is now studied by an insignificant proportion of students in our colleges. Physiology, descriptive geometry, and some other subjects of great importance, have been either crowded out or greatly reduced in time. The tendency seems to have been to replace these subjects by courses consisting too largely in the giving of mere information. Scientific facts have accumulated with such wonderful rapidity that training of the mind has been largely subordinated to the acquisition of scores of these facts, unmindful of the unquestioned truth that the ability to think correctly is a faculty which can be turned upon any subject with which the human mind may be engaged, and is, therefore, one of the most valuable acquisitions which a student can hope to make. Many will probably agree with the writer that too much is made of knowledge and too little of training.

Another significant fact connected with the recent development of our technical schools and colleges, is the greatly increased number of students. This has led to another evil, namely, the subordination of the exceptional man to the average man. It is probably safe to say that today the exceptional man in our schools is held back, to a considerable extent, and made to conform to the average of the class, just as is the case in greater degree in the trades unions. There is a leveling down instead of a leveling up.

Some of our colleges have met this difficulty by offering advanced subjects in almost every field, resulting in very small classes, where men who are specially interested pursue their chosen specialties as far as they like. This fact does not quite meet the difficulty, but rather, substitutes, in some cases at least, another one, namely excessive specialization and corresponding narrowness. Would it not be desirable if in every subject, even

those which ought to be taken by every student, the exceptional man were offered an opportunity to press ahead as fast as he could? In other words, as President Hyde of Bowdoin College has expressed it, should not our colleges run special trains for those who are capable of traveling in them?

The difficulties which have been outlined are apparent to our educators, and an attempt is being made to remedy some of them by increasing the length of the engineering courses from four to five or six years, and by the suggestion that breadth of training may be obtained by taking a college course of three or four years and superposing upon this an engineering training, as is done in some schools of law and medicine. This fact, for several reasons, does not fully meet the case. In the first place, very few students can afford to follow the latter suggestion, and indeed a four years' course is all that the great majority of engineering students can take the time to pursue, considering the fact that when a young man has graduated from an engineering school he is by no means an engineer, but must begin at the bottom of his professional ladder in the school of experience. Perhaps this is not any more true in engineering than it is in medicine, and yet the writer believes that it is.

In the second place, engineering differs fundamentally from the law, theology, or medicine, in regard to the preparation necessary for the technical work. It matters nothing to the student of law what subjects he has studied in college. He may have studied mathematics, or the classics, or economics, or language. Provided he has a reasonably trained mind he can enter the law school and begin the study of law equally well, no matter what his collegiate training may have been. The same is true with regard to medicine and theology, though perhaps not quite to the same extent.

Engineering, however, resting as it does upon mathematics, the natural sciences, and mechanics, requires a definite sequence of study from the beginning of the college course. In other words, the aim should be toward applied science from the beginning, and not from the end, of the college course. Does it not follow, therefore, that the best course of study for the engineer is one which is directed from the beginning toward applied science, and which includes both technical and general subjects in every year, the proportion of technical studies gradually in-

creasing toward the end, and the proportion of general studies correspondingly decreasing?

Does it not follow also from the foregoing discussion that the difficulties which have been outlined may best be met by cutting off from the top of our present too elaborate and too widely expanded curricula, and in offering the bachelor's degree for a more general course in engineering science and the humanities, in which fundamental principles rather than practical applications are emphasized; and in attracting, if possible, men with the intellectual capacity, the money, and the time, by post-graduate courses of one or two years, leading to higher degrees, in which the various technical subjects are pursued to the limits of the various fields as they are known today?

The writer believes that this is the proper direction in which our engineering schools should develop, and that it will lead, if combined with improvement in some respects in present methods of teaching, to better results than have been attained within the past few years.

It may be added that it is not necessary that every engineering school should offer post-graduate courses. The great majority should confine themselves, the writer believes, to the fundamental or elementary four years' course, leaving to the comparatively few institutions who have the means, the equipment, and the men, the task of offering post-graduate instruction.

It seems to be admitted, however, that so far as concerns curricula and the opportunities for obtaining the highest engineering instruction in the various fields, there is absolutely no need today, except perhaps in chemistry and possibly physics, for an engineering student to go outside of the United States of America. Conditions have so changed within the past twenty-five or thirty years that while, as already stated, it was formerly necessary to go to Europe to obtain the highest instruction, it is now not only unnecessary, but it is extremely probable that better opportunities are now offered in some institutions in this country than are to be found anywhere else in the world.

DISCUSSION

Prof. Durand.

Prof. W. F. Durand,* Mem. Am. Soc. M. E., in opening the discussion, expressed the opinion that the fundamental question underlying the problem of technical education turns on whether it is better to give the student discipline, or information. Either extreme is bad enough. If too much of the time is devoted to fundamental principles, he is hampered by lack of familiarity with practical facts. On the other hand, if too much stress is laid upon information or terminal facts, he is hampered by a lack of coördinative grasp. This situation has developed with increasing importance in the last few years, during which the field of terminal facts has been so vastly enlarged.

If technical schools should give information courses on every subject which might present some reasonable claim for recognition, it might well take a student some ten or fifteen years to complete all the courses offered. A golden mean must therefore be chosen between information and discipline. He felt that in selecting such mean, primary importance should be placed on disciplinary and fundamental training courses, and that the information courses should be chosen as to subject and quantity with a view of impressing and illustrating the fundamental courses, rather than with a view of equipping the student as a specialist in any particular line of engineering work.

He felt that during the past few years the pendulum had swung too far toward the information courses and with a corresponding hazard to the amount and character of the fundamental training. He felt that the viewpoint which the student acquires and the habits of thought and study which he develops are, after all, of greater importance than the particular subjects which he may study. He had often seen students graduate in some one so-called course, in civil or mechanical or electrical engineering, and after graduation find themselves by stress of circumstances forced into quite different lines of actual practice from those for which their studies may have seemed to prepare them. The well-grounded student, in such case, finds very little handicap and overcomes quickly any apparent lack of specific training.

The student when he reaches the field of actual practice often finds that the particular labels which have been attached to certain groups of studies have little real significance, and indeed if he has had the right kind of fundamental training and if he is the right kind of man at the bottom, he cannot be hemmed in or limited in any way as to the field of engineering in which he can render effective service. The speaker had often thought that educators suffered from lack of contact between those who develop and those who use the product of technical schools. The teachers turn out the product, but they do not use it. It is used by a different class of people who deal with life and its diversified problems. The product is used by manufacturers, engineers, superintendents, etc., and not always in the most sympathetic mode. The result may well be that teachers do not always direct their energies profitably, because of

* Prof. of Mech. Eng., Leland Stanford, Jr., University, Calif.

this lack of contact with the field wherein their product is actually utilized. If someone with wisdom and experience were given a roving commission to visit the entire field of engineering work and observe the product of engineering schools closely and critically, to consult the graduates as they are making their way in the practical field and to confer with those who are employing them, the speaker felt confident that most valuable suggestions might be developed and that such information would be of the highest value as a basis for a more intelligent and effective ordering of the energies which are expended in training these young men. Prof. Durand.

Prof. C. D. Marx,* Pres. Am. Soc. C. E., said that he would like to tie onto Professor Durand's remarks. The American Society of Civil Engineers has had for many years a committee on engineering education. That committee was appointed to study the present status of engineering education in this country and to make suggestions for its improvement. Before the work of this committee could be completed the Carnegie Foundation for the Advancement of Teaching decided to make a study of the teaching of engineering in American schools, similar to the investigations carried out by the Foundation as to the teaching of law and medicine. Professor Mann has been placed in charge of this investigation and the Committee of the American Society of Civil Engineers is cooperating with him. It is to be hoped that good results will follow from this critical study. Prof. Marx.

One of the charges constantly brought against the technical graduate of American engineering schools is that he is lacking in culture. The fact is that the student of engineering enters college with the same preparation with which his classmates enter the so-called cultural courses. The training which the embryo engineer gets should and does teach him to see straight, to think straight, and to do the right thing. Professor Marx doubts if any training of greater value is given in the cultural courses.

Then, too, it is said that engineering graduates are as a whole lacking in command of their mother tongue. They can neither write nor speak good English. At a recent meeting of the National Educational Association in Oakland, the speaker expressed the opinion that it is not the duty of a university to give a student additional instruction in elementary English. After a three- or four-year course of English in the high school, the student should come to college prepared to speak and write English correctly.

A few words as regards the study of modern languages: The students, after having studied a modern language in the high school for a year or two, come to the university with very little knowledge of that language and a disgust for its study. The time spent for this preparatory study is therefore apt to be wasted. With good courses in the study of English and the modern languages in the high school, the universities could be relieved of this elementary work, and additional time would be gained in the engineering curriculum for studies in law and economics.

Recognizing the fact, as Professor Durand has said, "That the labels

* Prof. of Civil Eng., Leland Stanford, Jr., University, Calif.

Prof. Marx.

given to different kinds of engineering have but little meaning'', for many years at Stanford there has been given an undergraduate course which, for the first three years, is substantially the same for all engineering students. There is no attempt to train specialists, but merely men grounded in the elements of the profession of engineering.

Professor Marx agrees with Professor Swain, that when you have a vessel of certain dimensions you can only get a definite quantity into it. In a four-year college course only a definite quantity of work can be done, and if specialized courses are added to undergraduate work, the training of the student in general principles must suffer.

As to the doing of outside work by teachers of engineering, he takes the ground that it is necessary and desirable that teachers of engineering should stand at the head of their profession. To be able to do this, they must stand and have stood in active practice. The outside work of the teacher should be of the kind which will advance the practice of the profession and enlarge the usefulness of the teacher. If the professor of engineering devotes more time to outside work than is consistent with doing his best work as a teacher, he should not retain his position in the university.

Prof. Merriman.

Prof. Mansfield Merriman,* M. Am. Soc. C. E., said that while not prepared to give a thorough discussion upon the papers, he would like to refer to the statement in Professor Swain's paper regarding the character of technical training, and to strongly endorse the statement. He believed that the men who are trained under the old system in technical schools are the stronger men. It had been his observation that those drilled in self-culture are the best. It is not the eastern nor the western school; it is the man that counts. In this world, some very great men never were in a college. The boy who, on the farm, late at night makes experiments with simple spool and strings, gets more actual benefit therefrom than by listening to the most learned professors. Professor Swain also calls attention to the four roads by which a student may obtain an education. The road of self-culture is not mentioned, yet it is of the utmost importance. Students in the university should devote themselves during leisure hours to little fads instead of idly wasting their time, as is so often the case. Education is in reality the drawing out of a strong man. On the subject of the great differentiation of engineers, he agreed with the previous speakers. We have gone too far. The old course of four years of engineering seems to be the ideal one. It should not be civil engineering, mechanical engineering or electrical engineering, but engineering. That is the important thing. It is difficult to make the parents of young America think so, however. Parents desire these various courses. They desire their children to specialize. If all the professors in this country over the age of forty were to vote upon the question, they would agree that the excessive differentiation in engineering courses should cease. There should be only one year of the four devoted to specialization.

* Consult. Eng., New York, N. Y.

Prof. J. C. Clark,* Assoc. A. I. E. E., expressed high appreciation for the paper of Professor Hollis and regretted that the author was not present to answer some of the questions which might arise. He felt that there was one inconsistency in the paper. In the early part of the paper the author states that "any man who keeps to one subject he has studied in college is likely to be a cultivated prig. Experience of life usually tends toward a broad education and the college must be judged by its success in giving the power to assimilate most quickly and most easily", while at a later point appears the statement: "Outside work on a considerable scale interferes seriously with class-room work, and the teacher who divides his work and his interests in that way is never so useful to an institution as one whose thoughts and time are wholly given over to the student". The speaker felt that these two statements do not quite agree. He himself agreed fully with the first of the two. Prof. Clark.

Prof. A. H. Fuller,† M. Am. Soc. C. E., called attention to Professor Swain's closing statement, that the old graduates are equal to any problem which is brought before them. He felt that no better ideal could be chosen for the present schools. Of course, the details may differ widely, but the object is the same: the development of the ability to think; and this he felt should constitute the main purpose in all college training. Prof. Fuller.

Dr. Alexander C. Humphreys‡ (by letter) desired to emphasize the point made by Prof. Swain that the college education in engineering is only preparatory, and that it is in the school of experience that the engineer must finally qualify himself for his profession. Dr. Humphreys.

It is interesting and instructive to note the early courses of study as offered by the Rensselaer Polytechnic Institute in 1826, in 1828, and 1835, and by the Sheffield Scientific School in 1847 and 1852. These courses were more particularly in line with so-called civil engineering.

The first course in mechanical engineering offered in the United States was that of the Stevens Institute of Technology. The first catalogue, 1871, gives quite a complete outline of the proposed course of instruction, to extend through four years. The building and equipment are described and illustrated in considerable detail, including some of the apparatus, instruments and models, particularly of the physics department. The equipment in instruments, apparatus, etc., was extensive for that period, electrical apparatus being much in evidence.

The departments were:

Mathematics and Mechanics,	Physics,
Belles-Lettres,	Mechanical Drawing,
Languages,	Mechanical Engineering,
Chemistry, including Metallurgy,	Shopwork.

* Asst. Prof., Elec. Eng'g., Leland Stanford, Jr., University, Calif.

† Prof. of Civil Engrg. and Dean, College of Engrg., University of Washington, Seattle, Wash.

‡ President of Stevens Institute of Technology, Hoboken, N. J.

Dr. Humphreys.

The requirements for admission were: Candidates to be "not less than 16 years of age and must be prepared to pass a satisfactory examination in English grammar, geography, arithmetic, algebra—including quadratic equations,—plane geometry, as given in Davies' Legendre, plane trigonometry —Solution of Plane Triangles". These entrance requirements, though exacting for the period, have since been greatly stiffened. Provision was made for the student to continue through the four years for the degree of mechanical engineer, or to decide at the end of the second year, and then take the last two years for a degree in "pure" science.

In addition to the regular class work, lectures were delivered by eminent engineers not on the regular teaching staff, and public lectures were delivered by eminent scientists, for the benefit of all who cared to attend. These lectures were a prominent feature of the early years of Stevens. As compared with the Rensselaer and Sheffield, it is particularly to be noted that the course leading to a degree was four years in length.

As early as 1880 special attention was paid to electrical engineering, though the instruction was given in the department of physics. It was not until 1902 that a separate department of electrical engineering was established. From the very first, the laboratory methods of instruction were strongly emphasized. While lectures had their place, the laboratory and class-room work were depended on for instruction and test.

The writer agreed with Dr. Swain that there is too great a tendency to depend upon lectures. Lectures have their place and definite value, but the laboratory and the class-room must be depended on for the personal work of the student and the test of his application outside of roster hours. Over-dependence on lectures means insufficient personal application of the student and, hence, superficial training.

He also felt, with the author of the paper, that there is far too strong a tendency to crowd our engineering curricula. Apparently too many educators think that the college unaided must keep pace with the progress of engineering science, and so they crowd more and more into the curricula, and after it is crowded to saturation, they then propose to extend the undergraduate course to five, six, or more years. These men fail to appreciate that no matter how many years were added, they could not keep pace with the advance in knowledge, and they also fail to appreciate the fact that the student must qualify himself as a specialist (preferably a broadly trained specialist), after he has left college. It is also not sufficiently kept in mind that few graduates of engineering colleges know at the time of graduation what is to be their specialty. The graduates of Stevens, although the emphasis (and only the emphasis) is laid on the mechanical branch of engineering, are to be found in nearly every branch of the profession.

Dr. Swain says:

"Thoroughness, the development of initiative and the habit of reflection, seem to have been largely replaced by a smattering of many things."

This is the inevitable result of crowding the curricula. It is the result obtained also in our graded schools from the same fault, though not from

this fault alone. We do need in all of our schools and colleges more "academic restraint and discipline." We need it not only for the good of the engineering profession, but for the good of the country as a whole. We do not want our students burdened with memorized facts, but we want them educated to be disciplined reasoners, and then taught how to select and refer to their authorities for their facts. As Dr. Swain says, we want training rather than stores of knowledge. Dr. Humphreys.

The writer had not noticed at Stevens "the subordination of the exceptional man to the average man" to the same extent, evidently, as Dr. Swain has experienced. The weak men are weeded out and the exceptional men have opportunities to employ effectively their spare time and mental energy; and bearing in mind the crowded curricula, they also have more time for reflection.

The writer, further, did not believe in post-graduate work in college for the great majority of engineer students. There are plenty of opportunities for some post-graduate work of all kinds in the school of experience. Post-graduate work in college or university is for the few, perhaps very few; and this may well be confined to comparatively few institutions, as Dr. Swain suggests.

If the day has not arrived, let us hope it soon will, when it will not be necessary for an engineering student to go abroad to get the highest engineering education. Further progress in this direction will probably result from the present war.

As a last word—it is a surprising fact that so little, comparatively, has been done for engineering education by the men of the United States who have made fortunes in the industries. Much has been done for education by the rich men of America, but not enough, comparatively, for engineering education.

Prof. C. Derleth, Jr.,* (by letter) pointed out that since so much depends upon the powers of the individual student it is futile to argue whether better results are being obtained by present-day engineering instruction than by earlier and less ambitious curricula. A first-class man benefits by any reasonable course of instruction. The average student acquires more information now than heretofore, but not more training and discipline. Prof. Derleth.

Today, engineering schools are matriculating students who have had widely different degrees of actual preparation. Where students are accredited from high schools to universities, as in the western United States, no certain test is possible, since entrance examinations are eliminated. Thus, in State universities a class of freshmen consists of men of unequal powers, assimilating instruction at widely different rates. The most capable scholar therefore loses time unless the individual may be counted upon to do extra tasks and additional reading without supplemented definite assignments from an instructor. Institutions which tolerate weak freshman and sophomore students must find them severe deterrents upon the rate at which subjects are pursued.

For the most capable and promising young men there is loss of time

* Dean of College of Civil Engineering, University of California, Berkeley, Calif.

Prof. Derleth.

also in the high school, because subjects are studied which are not necessary requirements or are mere manual work. A young man at eighteen should have acquired a liberal training. If not, he has failed to select the proper subjects in high school or he is incapable of assimilating fundamental subjects at a quick pace.

It is a mistake to interpolate in a four-year engineering course too many liberal subjects which should have been studied in the high school. From the age of eighteen to twenty-two an engineering student should be concerned with such subjects as mathematics, physics, chemistry, mechanical drawing, special sciences like mineralogy, geology, economics, with hydraulics, analytical mechanics and their applications to the design of structures and machines. A student who desires additional courses in languages, history, the social sciences, should elongate his otherwise four-year course to a period not less than five years. The liberal studies, though, should be centered in the earlier part of the course, appearing less prominently in the later years, because a professional student in the last years of his college study ought to devote himself primarily to his major department.

To avoid the necessity of "liberal courses" in a four-year engineering curriculum, students defective in training in the "humanities" should be eliminated,—in other words, matriculation standards should be sufficiently raised. Students entering the freshman year of an engineering college should show proficiency in English, history, elementary sciences, mathematics, drawing and at least two foreign languages. Only a few schools in the United States should attempt five- and six-year, or more, engineering courses They should be schools richly endowed, so that they may afford expensive equipment and attract the best instructors. They should be schools in fortunately located communities, so that students and faculty may be in close touch with large enterprises and observe at first hand manufactures, machinery, transportation, harbors, structures. The great majority of students should not remain in college more than four years. Only those exhibiting capacity should be encouraged to study a fifth or sixth year or carry on what may be termed graduate work in engineering. It would be better to have students, as a rule, consume their extra year or years for advanced liberal studies or for subjects in other departments of engineering, that they might be broadened in their training. Thus a student who has studied for four years in a civil engineering course would be wise in devoting a fifth or sixth year to subjects in language, literature, economics, law and in other branches of engineering like metallurgy, mechanical and electrical engineering. Such a student, had he the foresight, would wisely have taken some of the additional liberal studies earlier in the first four years, but few, if any, can see more than two years ahead.

At least 80 percent of the students registered in our engineering courses in the United States get no proportionally increased benefit from more than four years' university training. They lose valuable years if they remain in school later than twenty-four years of age. Even for the best students it is questionable how many do well by remaining for graduate engineering work. Those who have a taste for teaching or who show high theoretical

Prof. Derleth.

abilities may perhaps safely remain; but for the typical, keen engineering graduate likely to show promise in business methods, the effective graduate school is the actual field of engineering itself. A well-trained college student twenty-four years of age, employed in a great undertaking under the leadership of a competent and experienced chief or consulting engineer, has the best opportunity for advanced engineering study. In his early apprenticeship years he has the time. His office and the field exhibit the finest laboratory opportunities. The most virile college graduates prefer to seek employment after four college years instead of remaining at the university for additional mathematical study and training in analysis. Work in our testing and other laboratories cannot be considered the equivalent in possibilities to the offerings of actual construction; that is, when we are speaking of the average best student. Such are Prof. Derleth's reasons for arguing that there never can be any bona fide students in a truly graduate engineering course.

There may be many students in a mixed liberal and engineering course of five or six years' duration, but they must be men who can devote the time and who have the money to defray their expenses.. Otherwise we must subsidize students of promise to take broad courses, mixtures of the liberal and the applied, through the offering of fellowships and scholarships. These aids must not merely relinquish tuition, but offer ample financial assistance to meet living expenses and to pay for books and apparatus. Otherwise, the student is tempted to consume his most valuable hours in drudgery or hack work.

In a large engineering school a department, today, consists of men of widely different ranks and training. There are professors representative of special subjects in which they are expert, e. g., sanitary or railroad engineering. Secondly the department contains a group of junior instructors, younger men who deal with laboratory instruction and the more elementary subjects like surveying, or who assist the senior professors in the conduct of such courses as strength of material or structural design. In addition, a third group of officers are those who assist in the mechanical part of the work and who may range from expert mechanicians to laborers. It is sometimes difficult to know where to draw the line between these classes. A large, modern engineering department may be compared to the personnel of a contracting office, particularly where a school department concerns itself not only with instruction but also with professional matters relating the university through service to the State, to municipalities, to private individuals and corporations. Thus the question arises, how many instructors and assistants most effectively serve to their fullest capacities.

Assistants and junior instructors, with few exceptions, should devote their entire energies to instruction. They should be given time free for study, for travel and observation. But they should be discouraged from using spare time for mere routine and hack duties which bring meagre compensation, because in the nature of the case the work thus done must be elementary—sapping rather the energies than adding to the professional standing and knowledge of the instructor.

Prof. Derleth.

The senior professors must be men interested in outside affairs and should be capable of speaking with authority on subjects in which they are the representative experts of the university. Of course their outside relations as consulting engineers must not interfere seriously with their main duties of instruction. Just what should constitute an even balance in these responsibilities, educational and private, must be left to personal conference between the executive head of the university, that is, the president or regents, and the individual professor.

Too much commercial or routine work done by educational departments of engineering schools through so-called experiment station activities and university extension must inevitably lead also to disadvantageous situations. Where instructors consume part time with small or varied problems better handled by trade and correspondence schools, by practicing engineers or by testing and inspection firms, of necessity the regular instruction given by that department must suffer; at least particular officers of instruction must divert time to extraneous purposes which time might otherwise be used for real educational endeavor.

Paper No. 234

SCIENTIFIC AND ENGINEERING IMPROVEMENTS IN THE HEATING AND VENTILATING ART.

By

ROLLA C. CARPENTER,
Professor Experimental Engineering, Cornell University; Past President American Society Heating and Ventilating Engineers; Member A. S. C. E., A. S. M. E., I. M. E.; Consulting Engineer.
Ithaca, N. Y., U. S. A.

In the following paper I propose to make a concise statement covering in a broad way the general character of improvements of a scientific and engineering character which have been made in the heating and ventilating art during the past decade. I shall not undertake to give any details as to the exact character and scope of the development of such improvements, but will refer those who wish such information to the papers on the special phases of the development in this art which have been submitted to this Engineering Congress for consideration and discussion.

The improvements in the art may be classified as pertaining to (A) the scientific development and (B) the engineering and mechanical development. It is a safe assertion to make, that during the past few years the greatest development in the art has been made along the scientific side, with the result of giving us underlying fundamental knowledge relating to the laws which apply to the art, and a great deal of information as to the coefficients which are to be applied in connecting the theoretical underlying laws to the practical application of the same. There have, however, been great and fundamental improvements made in the engineering and mechanical fields, and, as a result, the systems of practice and details of construction have been varied greatly during the past few years and new fields of development have been introduced which are well recognized as of great im-

portance, and which were given little or no consideration ten or twelve years ago.

I will first call your attention to the general character of the scientific development and to the results which have been obtained within the last few years. The scientific development has been of a character which has tended to change the art from a mere trade, in which the rules of practice applied in design and construction were principally "rules of thumb" which had no scientific basis for existence, into an engineering art founded on scientific principles of design.

The art of heating is in many respects quite independent of that of ventilating, but the mechanical requirements in the two arts are similar and the necessity for simultaneous application to practice of the two arts, when applied to building construction, has led to such a close association that they are both practiced as a single art, which has made it necessary for consulting and practicing engineers to understand both the art of heating and of ventilating. Practically, the two arts are inseparable and it is desirous to consider them together, although scientifically they may vary greatly from each other.

Regarding the scientific development of the art of heating, I will merely state that during the past few years extended investigations have been carried on to obtain accurate information as to the amount of heat required to warm enclosures in buildings to any desired temperature under every practical condition. It may be stated that the principal information which engineers have had as to the heat required for warming buildings has depended on scientific investigation relating to the transmission of heat made more than fifty years ago by Péclét. The recent investigations have resulted in a modification of the Péclét coefficients and a greater accuracy in the method of computing the heat required for warming buildings. It is evident that the heat required for warming buildings must be that needed (1) for supplying the losses through the enclosing walls and windows, and (2) for supplying the heat required to warm the entering air. It is evident that the entering air may be supplied positively when forced systems of ventilation are used, or it may get into a room through cracks and crannies or accidental openings; it is a well-recognized fact that it is not possible to

construct the enclosing walls of a room impermeable to air, and that there is a constant interchange of air in an enclosure with that outside, which has a marked effect on the ventilation of the interior. The air which enters through accidental openings is sufficient to change the cubical contents of a living room once or twice per hour, dependent upon conditions in ordinary still weather, and two to four times an hour in extremely windy weather, unless the building construction is of an unusually impervious character. The modified coefficients referred to above have been made public by the German Government and are to be found in the recent text books relating to this art. The investigations of R. P. Bolton, Past-President American Society Heating and Ventilating Engineers, in determining the coal consumed for a number of years in various classes of buildings and under different conditions, have been of great value in giving information necessary to modify the coefficients of previous years and render them more accurate when applied to actual construction.

Extended investigations have also been made as to the results produced in operation by various kinds of apparatus which are designed to supply heat to an apartment or building. This information is generally expressed in the terms of coefficients which represent the heat supplied per unit of surface per hour, for stated conditions; or in the case of furnaces or steam boilers, which serve as apparatus in which fuel is consumed, and the resulting heat received by the circulating medium employed to convey it to the position where it is to be utilized, the coefficient is expressed in terms of "efficiency", calculated on a basis of theoretical results possible with the fuel consumed. The results of such investigations are to be found in recent editions of text books relating to the art and are sufficient to give quite accurate information of the possible results from a theoretical standpoint, and from various types and kinds of heating apparatus.

SCIENTIFIC DEVELOPMENT IN THE ART OF VENTILATION.

The scientific development in the art of ventilation has been startling in some respects, since it has served to prove that our former theories as to the needs of ventilation and the amount of air required were erroneous and based on an entirely mistaken idea of the physiological requirements of mankind. The scientific developments have tended to disturb our former requirements

of the amount of air necessary and the modes of introducing such air and the effect of various impurities on the human body, and just at the present time there is considerable uncertainty as to just what specification as to amount of air is strictly necessary. The paper by Mr. D. D. Kimball presented before the Congress gives full consideration to the character of the investigation referred to and of the conclusions relating to the amount of air needed for perfect ventilation. It has been customary for many years to adopt as a basis for ventilation requirements the introduction of 30 cubic feet of air per minute for each occupant of the room; this amount was computed on the basis of an assumed increase in carbon dioxide contents as a result of respiration products. The recent investigations have proved that an increase in carbon dioxide contents up to five or six percent is immaterial and has no effect on the health or comfort of the occupant; consequently, the carbon dioxide standard is not useful from a physiological standpoint. It has long been known that carbon dioxide did not injure any person by the process of respiration, but information was not at hand as to the percentage which would make respiration difficult. A reference to an early edition of my work on "Heating and Ventilating Buildings" serves to show that for the past twenty years carbon dioxide has not been regarded as a harmful constituent of the air we breathe. Whether or not it can serve as a standard for computing the air required from physiological standpoints is probably not of great practical importance. It can serve in the future, as it has in the past, for determining by well-known methods of computation, which give fairly accurate results as to the amount of air supplied for each occupant in a given time, the amount of air actually introduced into an enclosure. The assumed limit of increase of carbon dioxide served as a basis for computing the old standard of ventilation of 30 cubic feet of air per person per minute, on what was thought to be physiological grounds. Mr. Kimball points out that this view is no longer tenable, but that a computation made on the basis of humidity requirements points out the desirability of maintaining the same standard of ventilation in the future as in the past. It is, in fact, reasonable that a standard which has been nearly universally adopted and which has been practically applied for years must have a scien-

tific basis which confirms the past requirements and the past satisfactory practice.

Extended scientific investigations have been made as to the results of varying degrees of humidity, as to the effect of noxious gases discharged by the process of respiration, and as to the effect of odors and various other accidental constituents of the air; but conclusions have not been reached as to the results, harmful or otherwise, due to such constituents. Regarding the process of conditioning and purifying the air, the engineering and mechanical process relating to practical application is considerably in advance of the scientific investigations which are needed for knowledge of the underlying principles and of the coefficients required for design. This last statement is, I believe, one which has generally been true as regards the art under consideration. A study of the development of the art indicates, first, a development of practical application resulting in the determination of various "rules of thumb" not founded on rational underlying principles, but of a character to serve as a guide for installation of work; and, second, a development of the scientific underlying principles, as a result of investigation and research which has served to put the entire art on a scientific basis. Such scientific developments are now being undertaken, as will be noted by Mr. Kimball's paper, and these no doubt will not only give necessary information for guiding future practice, but will modify and change the past practice to a considerable and material extent.

THE ENGINEERING AND MECHANICAL DEVELOPMENT IN THE ART OF HEATING.

The art of heating has many engineering and mechanical branches and gives employment to a variety of different workmen, practising different trades and, in many instances, belonging to different unions. The heating art, especially as applied to buildings of considerable size, may be broadly considered under the following sub-heads:

(1) Hot-air circulation
(2) Hot-water circulation
(3) Steam circulation
(4) Steam heating, non-return systems

All of the above systems involve three parts, or the equivalents thereof, which I will refer to as: (a) furnace or heater, (b) circulating means, (c) radiating means through which the heat passes from the circulating system into the room to be heated. In the case of hot-air circulation, the air is usually taken from the external atmosphere and is returned to the same after performing its function of heating and ventilating; but in some instances it may be re-circulated through the furnace, with permissible, if not favorable, results. The hot-air circulation is usually due to the changing of gravity effects in the process of heating, especially as applied to small buildings, although in many instances it is successfully applied with a forced circulation in connection either with a furnace or steam-heating apparatus. I do not have time for a detailed consideration of the improvements in these various heating systems during the past ten years. I can only state briefly that each and every type of heating system referred to above has been greatly improved as to the mechanical details, as to the standards of construction, and as to efficiency. I should also state that although new systems or modifications of the old ones are being used with marked success, there is still a good demand for heating apparatus in each one of the systems above enumerated, and that from a general standpoint none of the above systems is likely to become obsolete. Heating with a hot-air furnace, which is one of the earliest developments in the heating art, has been greatly improved by the use of better proportions and better design in all parts of the system, resulting in higher efficiency and more reliable results.

Under classification (4), as above, I intend to include all steam-heating systems in which the circulation is assisted by some sort of pumping device which carries away the water of condensation from the radiating system and which is applied in various systems of exhaust steam heating and of so-called vacuum or vapor systems. In this particular branch of heating, the development from a mechanical and engineering standpoint has been of remarkable extent, and this particular line of heating has been developed from an insignificant basis to a successful, practical art which is extensively applied and which is producing results not considered possible ten or fifteen years ago. I

will not discuss any of the improvements developed in this system, as they are fully covered by the paper by Prof. Hoffman before this Congress.

DEVELOPMENT OF THE ART OF AIR CONDITIONING.

The term "air conditioning" is now quite generally applied to systems of purifying the air, changing and regulating its moisture contents, and varying the temperature thereof as needed to produce the best sanitary results. Within the last ten years an extensive business has been developed by the ever-increasing demand for apparatus that would produce and maintain any desired moisture content and that would remove from the air nearly, if not quite all, of the dust or smoke products. To meet the requirements for "conditioned air", many inventions of real merit have been produced and successfully applied within the last few years, resulting in improved sanitary conditions and increased comfort of the occupants. W. H. Carrier, Member A. S. M. E., presented a paper in the Proceedings of the A. S. M. E. Society, 1913, which can be profitably studied for information as to the underlying scientific principles applying to the art of varying the degree of humidity, and also as to the detailed construction of the apparatus. I have also presented information on this subject in the last edition on my work of "Heating and Ventilating". The art of "air conditioning" has practically been developed from an insignificant condition to a high state of perfection within the past decade and is worthy of more consideration than I am able to give it at the present time. The art of regulating the humidity of the air has been developed to a great extent and is extensively applied in many of the industries, such as weaving, the manufacture of tobacco products, etc., where the degree of humidity has great effect upon the process of manufacture and the results. Automatic humidity regulators have been developed and successfully applied for the purpose of regulating the moisture conditions, and are worthy of careful consideration as a new development which has had much to do with the success attained in the art.

Investigations of the results attained from the standpoint of healthfulness and comfort have proved that the proper regu-

lation of humidity permits a reduction in temperature, with an improvement in general sanitary results.

The Cooling of Rooms.

Considerable advance in the art of manufacturing apparatus for reducing the temperature of rooms, when the outside air is too warm for comfort, has been made during the past few years, and the business in the manufacture and installation of such apparatus is increasing at a rapid rate. My experience leads me to believe that a large proportion of the new school buildings now nearing construction in the eastern part of this country, as well as assembly rooms for certain theatres, are being equipped with such apparatus. The system most successfully applied is that of introducing the air for ventilation by positive means and cooling the entrance air by the introduction of sprays of water at the desired temperature, the excess being later removed to produce the desired humidity. The results which have been attained by the method outlined above have been, in most instances, satisfactory, and it is fair to predict that this system will be quite generally installed in the future, wherever it is desired to lower the temperature of the air in the room during some months and to raise the temperature during other months, and always to maintain the most desirable percentage of humidity.

Dust and Smoke Removal.

The art of "air conditioning" is generally practiced by a system of washing the air by sprays of water or by passing it through a filter maintained in a wet condition, together with an eliminator system for removing an excess of water. It has been practically demonstrated that a successful washing system has the effect of removing nearly every particle of dust or smoke. I merely call attention to this particular fact which has been attained by the practical application of "air conditioning" systems and which has resulted in improved cleanliness and sanitary conditions.

CONCLUSION.

In conclusion, I desire to call attention to the improvement made in the art, from a practical engineering standpoint, by the introduction of "standards" for various parts of the constructions, which standardization has been accomplished by the joint action and agreement of the principal manufacturers in the art

and fixed, after once being adopted, by the necessity for interchangeable parts, which may be obtained from any manufacturing shop producing supplies. I also call attention to the adoption of a code of specifications for hot-water and steam-heating boilers by a committee appointed by the American Society of Mechanical Engineers in co-operation with the manufacturers of such apparatus, which is certain to result in the use of a higher grade of material and a better standard of manufacture than heretofore in use. The effect of this will be higher efficiency, greater safety and a reduction in cost to the user, due to an improved durability.

DISCUSSION

Mr. Barry Dibble,* Assoc. M. Am. Soc. C. E., desired information regarding the results found by the use of ozone as a de-odorant. Mr. Dibble.

Mr. Thomas Morrin,** Mem. Am. Soc. M. E., replying to Mr. Dibble, cited the case of the use of ozonators in vaults containing old bank books. In one vault the ozonator absolutely suppressed the unpleasant odor and it was made quite inoffensive in the other. The amount of current used was 75 watt hours each. One vault was approximately 20 feet by 20 feet by 10 feet high; a Universal General Electric ozonator was used. The other vault was of 50 per cent greater capacity and 2 ozonators were used when the vaults were first opened in the morning, but only one was necessary during the day. Mr. Morrin.

In regard to Prof. Carpenter's paper in connection with the use of steam, nothing is said about the conditioning of the steam. Air in steam should be reduced to a minimum by using the same water over and over again, because in cooling the air is liberated and the free oxygen from the air then becomes vicious as an oxidizing agent on the interior of the pipes.

As to the washing of air and the change in humidity, nothing is said as to the cost of reducing the humidity. Regarding the question of a comfortable temperature of rooms, it is true that the humidity has a wonderful effect upon the occupant. If the humidity is high, the temperature must be lower in order to give the greatest comfort. In Europe, where they have as high as 50% humidity with air at 60° Fah., it is comfortable; while here, with lower humidity, we use the air at from 66° to 68° Fah. A temperature of 64° Fah. for scholars in primary schools is found sufficient. For older scholars, the temperature varies from 66° Fah. to 68° Fah.

Drafts are now being much disregarded in rooms, because it is found that, with mechanical ventilation and heating, the temperature actually varies but a small amount in different parts of a room.

---

* U. S. Reclamation Service, Minidoka, Idaho.

** Consulting Mechanical Engineer, San Francisco, Calif.

Mr. Morrin. In the conditioning of air, according to the latest and best information that we have, a high percentage of CO_2 may not affect the health, but cleanliness demands the best we can get. No one likes to use towels after others, nor cast-off clothing, and the same should be true of the air we breathe.

In Los Angeles a thorough and complete mechanical heating and ventilating installation was controlled by humidostats. With a temperature of 112° on the street, an air washer reduced the temperature 20° in the building but raised the humidity, and therefore the air in the building was quite as oppressive as outside. Under such conditions an air washer is to my mind a failure. It is better to pass the air through cool spaces without the washer in such cases. The cost of reducing air at the above outside temperature to the dew point would be ten or fifteen times that of ventilating and washing the air.

Mr. Wilson. **Mr. R. M. Wilson*** desired to ask if the question of preventing the passage of fire through ventilating ducts is considered. Also, he understood that in this country the plaster on the walls is kept about one inch away from the wall; for this he supposed there are three reasons: to prevent moisture, to prevent staining of the walls, and to prevent the temperature of the outside passing through the wall.

Mr. Morrin. **Mr. Morrin,** replying to Mr. Wilson, stated that he did not know of any particular arrangement for either blocking the ducts or stopping the ventilating fan. He had just seen a circular prepared by The National Board of Fire Underwriters, in which this matter has been taken up by them.

The space between the laths and the wall is not an insulator unless circulation is thoroughly stopped in both directions. The principal reason for furring is on account of moisture troubles and staining. It also allows a better bond of plaster with the lath.

Mr. Kaiser. **Mr. C. S. Kaiser** wished to have explained the distinction between the art and the science of ventilation.

What do engineers think of radiant heat by heating large surfaces and radiating in straight lines rather than in curved lines as from the ordinary radiators? (Mr. Kaiser then referred to an instance in Liverpool in which this method was used.)

Mr. Morrin. **Mr. Morrin** expressed inability to see why more heat per square foot should radiate from flat than from curved surfaces. In England larger pipes are used, up to 4 inches, but in these pipes there is an unused core of hot water. It has been found that a 1¼-inch pipe gives the best radiation and highest radiating efficiency. Large surfaces would necessitate massive construction and it is doubtful if the large surface would be more efficient. He had no knowledge in regard to the efficiency of the flat-surface heating.

* Brisbane, Queensland, Australia.

Paper No. 235

RECENT DEVELOPMENTS IN HEATING AND VENTILATION.

By

D. D. KIMBALL, Pres. Am. Soc. of Heat. & Vent. Engrs.,
Mem. N. Y. State Comm. on Ventilation,
New York, N. Y., U. S. A.

Professor Winslow has well stated that "The art of ventilation was born too soon." The developments of the last ten years would seem to warrant this statement. The prevailing conceptions of the essential elements of ventilation and the bases of a reasonable demand therefor have changed, but little or no change is involved in the quantitative standards of ventilation which were in use ten or more years ago.

Formerly a supply of fresh air, together with an exhaust of the vitiated air, and a temperature of approximately seventy degrees were assumed to be the aim and end of heating and ventilation. Little was heard of air conditioning, air movement, harmfulness of dust, or of ozone, insofar as they were involved in the practice of the art of ventilation. However, all of these subjects, in fact, all that are now considered essential to ventilation, were the subject of study and investigation prior to ten years ago. So that the work of the last ten years has been that of experimentation, research and development along lines previously indicated. Much this same condition exists in relation to the apparata in use in the installation of ventilating systems.

Ten years ago the practice of the art of ventilation appeared to be well established and a general belief in the efficacy of artificial ventilation seemed assured. Insofar as the adoption of such ventilation was not universal, it might have been charged to financial considerations. About ten years ago, however, doubt, and then serious questioning, concerning the merits of artificial ventilation became pronounced. In many

directions were heard statements that artificial ventilation was a complete failure, that the "cooked", "canned" or "roasted" air supplied by the ventilating system was harmful. Fortunately, as might be expected, such allegations resulted in many serious studies of the problem, and, although these have not yet resulted in the reaching of satisfactory conclusions, they give promise of an early solution of this most important and much vexed problem.

The most thorough investigation of this subject is probably that being carried out by the New York State Commission on Ventilation, which has already spent two years in investigation and experimentation, and has planned two years of further study. This work was made possible by two generous gifts of Mrs. Elizabeth Milbank Anderson, amounting to $75,000, through the New York Association for Improving the Condition of the Poor.

The members of the Commission, who serve without pay, include Prof. C. E. A. Winslow, formerly of the College of the City of New York and now Professor of Public Hygiene, Yale University, Chairman, Prof. F. S. Lee, Professor of Physiology at Columbia University, Prof. E. B. Phelps, Chemist of the U. S. Hygienic Laboratory, Dr. J. A. Miller, of the Bellevue Medical School and Hospital, Prof. E. L. Thorndike, Professor of Psychology at Teachers College, and the author, Consulting Engineer. The Commission was organized in June, 1913, formulated its plans at once, and began actual experimental work about December, 1913.

Much may justly be expected to result from the work of this Commission, for it is the first and only time that adequate funds have been made available to properly study this baffling problem. Those phases of the problem which have been the subject of study, investigation and experimentation may be classified as follows:

1. Chemistry of the air
   - Oxygen
   - Carbon dioxide
   - Organic matter
   - Odors
   - Ozone

2. Air conditioning
   - Temperature
   - Humidity
   - Dust
3. Mechanics of ventilation
   - Air volume
   - Air movement
   - Heating of air
   - Cooling
   - Recirculation
   - Natural vs. artificial ventilation
4. Efficiency of installation and operation
5. Ventilation apparata

Final conclusions have yet to be reached in the case of all of these subjects except those of carbon dioxide and organic matter. In the matter of temperature, the effects of low temperatures only remain to be studied.

Only in recent years has it been generally recognized that CO_2 was in no wise harmful. Previously it was freely referred to as a poison and abnormal concentrations thereof were interpreted as indicating also a serious, if not dangerous, diminution of oxygen. As late as 1910 Hoffman and Raber in their admirable "Handbook for Heating and Ventilating Engineers" stated that carbon dioxide

> "is constantly being diffused throughout the air of the room, thus rendering it unfit for use. If this carbonic acid gas could be dissociated from the rest of the air and expelled from the room without taking large quantities of otherwise pure air with it, the problem of the heating engineer would be simplified, but this cannot be done".

We had been educated to the belief that the sad experiences of the unfortunates confined in the Black Hole of Calcutta, the hold of the ship Londonderry, and the underground prison at Austerlitz were due to carbonic acid gas poisoning. Nevertheless it was in 1862 that von Pettenkofer showed that any possible changes occurring in the carbon dioxide and oxygen contents of the air of a room due to occupancy and the lack of ventilation thereof are well within the limits at which harm could possibly result to the occupants.

Rarely does the oxygen of the worst ventilated room fall below twenty percent (the normal proportion being approximately twenty-one percent) and rarely does the CO_2 exceed forty parts in ten thousand parts of air (normal out-door air contains approximately three and one-half parts CO_2 in ten thousand parts of air). The air of the lungs, under normal conditions contains but sixteen percent of oxygen and five percent of CO_2, and it is believed that the respiratory system readily adjusts itself to such slight changes as may occur in our atmospheric environment by a slight increase in the rate of respiration.

The conclusion reached by von Pettenkofer has been justified by the investigations of Hermans, Flügge, Paul, Hill and others, and represents the general belief of today. So that CO_2 is no longer regarded as a poison, or even as a harmful agent, but is relegated to the position of an index of air supply or diffusion. Likewise, the possibility of a serious diminution of oxygen in an ordinary occupied apartment is not regarded as possible.

Thus have we been led to look for other harmful agencies in the air of the badly ventilated room, in the belief that other than in the chemistry of the air lay the solution of the problem of ventilation.

That this question may not, however, be considered as finally settled is indicated by the result of the most recent experiments of the New York State Commission on Ventilation, as reported by Prof. Winslow, Chairman, and Mr. Palmer, Chief of Investigating Staff, in the Proceedings of the Society for Experimental Biology and Medicine (1915, XII, pp. 141-144). So important is this work that the following extensive quotation from the paper referred to seems justified:

"In the course of our investigations we have however, discovered a new measure of the influence of vitiated air, which seems to indicate that there is after all an effect produced upon the body by the chemical constituents of the air of an occupied room. This effect is manifested in a diminished appetite for food.

"The subjects in the first three of the five series of experiments reported which are tabulated below were young men, mostly students at the College of the City of New York or at New York University, and in the last two series young women. For five days a week for a period of from two to

six weeks, they were placed in the observation room of the experimental plant at the College of the City of New York (described Proc. Soc. Exp. Biol., Vol. XII, p. III). In each series of experiments the subjects were supplied with a fresh air supply of 45 cubic feet per minute on half the days, while on the other days no air was supplied and (subject to unavoidable leakage through walls and ceiling) the carbon dioxide, organic matter, and whatever else was given off from mouths, bodies, and clothing accumulated in the room. Temperature and humidity, however, were controlled so as to be the same on both ventilation and no-ventilation days. In the last three series of experiments, three desk fans were kept in motion at all times so as to prevent the introduction of an air movement factor by the current from the inlet duct on the ventilation days.

"After the subjects had been in the room from 2 to 3 hours, a luncheon made up of weighed portions of known calorific value, was served and the amount of food left uneaten was weighed to determine by difference the amount consumed. * * * * * *

"In Series XI there was a slight excess of food consumed on the no-ventilation days. This series was however rendered practically valueless by the fact that after it was under way we discovered that religious dietary laws, observed but loosely at first, but gradually with more strictness, had prevented the use of certain articles of the diet. This influence was quite impossible to measure or to balance. The results however are included for completeness.

"The other four series show a consistent excess of food consumption on the ventilation days. In view of the fact that these series represent averages of 71, 80, 196, and 160 meals respectively we believe them to be significant. In Series III and VII where the food left by each subject was separately weighed every one of the 8 different subjects ate more on the ventilation days. * * * * * *

"This effect on appetite of the absence of ventilation, though slight, is apparently a persistent one. At the beginning of an experiment there is but little difference noted on the two types of days. As the novelty of the environment and the meal wears off however, the effect of breathing the same air over and over again seems to exert an increasing influence.

"This action is illustrated in Series XII, where the average excess of food consumed on ventilation days was 6.8 per cent. During the first two weeks this excess was but 2.8 per cent. In the last two weeks it amounted to 10.8 per cent. * * * * * *

"These experiments seem to warrant the conclusion that there are substances present in the air of an unventilated occupied room (even when its temperature and humidity are controlled) which in some way, and without producing conscious discomfort or detectable physiological symptoms, diminish the appetite for food. The effect of such an influence might in time be very important and it seems possible that the observed beneficial effects of fresh air may to some extent be connected with this phenomenon". * * * * * *

Table I.

Series	Date	No. of Subjects	Sex	No. of Days	Hrs. in Chamber before Lunch	Ave. CO_2 at end		Ave. Cal. Consumed		Excess favoring Vent. day	
						Vent.	No Vent.	Vent.	No Vent.	Cal.	%
III	6-8 to 7-27-14	4	M	18	3-3½	7.5	29.5	1,308	1,151	157	13.6
VII	10-12 " 11-6	4	M	20	3	9.0	50	1,620	1,492	128	8.6
X	12-8 " 1-29-15	7	M	28	2½	9.5	36	2,057	1,971	86	4.4
XI	2-1 " 19	8	F	12	2½	7.0	37.5	1,313	1,381	—68	—4.9
XII	2-22 " 3-19	8	F	20	2½	10.0	37.5	956	895	61	6.8

Later experiments, during which CO_2 and odors representing as near as possible odors of human origin were added to the air, have not changed these results.

May it not be that inasmuch as oxygen is the active agent in the processes of oxidization which occur within the body, even the slight diminution thereof in the air of the occupied apartment has a direct effect on the extent of internal oxidization.

Of the cumulative effect of such a condition we have no knowledge at present. There is evidently, however, some positive deleterious effect incidental to the re-breathing of air, quite sufficient to warrant a demand for an ample supply of pure air.

It having been determined that CO_2 in the proportions ordinarily found in the air of the occupied apartments constituted no menace to health, attempts were made to determine what harmful substances existed in such air. By some it was urged that breathed air contained an organic poison. Early investigators along this line were Hammond (1883), Hermons (1883), Brown-Sequard (1889), Haldane and Smith (1892), Merkel (1892), Lehman and Jesse, Rauer, Leubbert and Peters, Billings, Bergey and Mitchel (1895). Rosenau and Amoss (in 1911) gave new impetus to this idea by announcing experiments in which guinea pigs were said to have been sensitized anaphylactically by the injection of the products of expired air. These experiments have been carefully repeated by Dr. Leonard Hill, D. R. Lucas (under the direction of Profs. Winslow and Baskerville) and Weisman, with uniformly negative results. The latter, in his paper on Bio-chemical Studies of Expired Air in Relation to Ventilation, has thoroughly reviewed the work and literature on this subject and offers the

conclusion, which is generally accepted, that "so far as danger to health from any effects of poor ventilation is concerned, the presence of sensitizing material in the breath is not a factor to which such ill effects may be attributed".

Odors may be said to be of no physiological importance, but nevertheless they constitute a real nuisance, and although their toxicity may not be proved, our sense of common decency dictates that our occupied apartments should be free therefrom. This may best be accomplished by fresh-air supply. To what extent, or in what manner, disagreeable odors may have a reflex action on our physical and mental condition is not now known. It may be altogether psychological; but even though this be so, and the effects of odors be not physiologically harmful, they may be annoying or disturbing enough to sensitive people to warrant the use of all possible means for their elimination. The report of the first year's work of the New York State Commission on Ventilation, in conclusion 7, suggested that possibly the reduction in the appetite of the subjects in stagnant air might be due to the sub-conscious effect of odors. Later experiments do not bear out this suggestion.

The use of ozone as a bacteriacidal agent, deodorizer or purifier of air has been advocated as an adjunct to, or even a substitute for, ventilation.

It is not now, however, considered a factor in ordinary ventilation work. Doctors Jordan, Carlson and Sawyer and others have shown that it has no value as a bacteriacidal agent within such concentrations as are not harmful to people.

Nothing has been offered indicating the desirability of temperatures lower than 68 degrees for normal beings at rest. Occasional lower temperatures, or variations of temperature, are advocated by many doctors. Scientific data concerning the value thereof are desirable.

Artificial humidification is not a new idea, for as early as 1860 it was advocated by Wolpert, by Oesperlin in 1876, Scherer in 1881, Paul in 1885, Rietschel in 1886 and by others since then. Nevertheless it was but little, if at all, practiced ten years ago.

There now seems to be an almost complete unanimity concerning the desirability of humidification. And this despite

the fact that there is not available an iota of scientific or exact data justifying the demand for artificial humidification, or proving that dry air is harmful in any way.

Concerning this subject, a writer in a late issue of "The Modern Hospital" makes the statement that "We must have humidity and the amount has not been settled". In support of the first part of this statement, and in apparent refutation of the second part thereof, the author quotes below a few of the many authorities who determine the desirable degree of humidification to be as follows:

Wolpert	40%—60%	Deitz	30%—60%
Oesperlen	40%—60%	Rubner	30%—60%
Scherer	30%—60%	Riepzchel	30%—40%
Paul	40%—60%	Richardson	40%—60%
Rietschel	40%—60%	Shaw	50%
Smith	50%—60%	Shepherd	30%—55%
Chicago Ventilation Commission (minimum)	35%—40%	Brefflar	40%—50%
		Evans	60%

In the practice of artificial humidification, 30% has been regarded as the minimum and 50% the maximum for which provision should be made. The lower standard is that provided for extreme cold weather, because there exists no reason for believing that this is insufficient, because artificial humidification is expensive, and, incidentally, the lower humidity will generally prevent frosting of the windows in extreme cold weather.

Professor Czaplewski states,

"As regards the air purifying properties claimed for the gas: (a) We need not count on a destruction of bacteria in the air by ozone, nor their destruction on the walls of rooms, nor on subjects in the room. (b) There is no oxidation of the organic dust particles. (c) There is, however, a positive effect on certain scents and the odors given off by the same.

"In ozonization of air we must differentiate between (a) ventilation with ozonized fresh air (best central ventilation); (b) ozonization of enclosed room air. The former is preferable without question, and is the only one that need be considered in the development of the ozone ventilator problem. Ozonization of room air is often only a makeshift of dubious value. Tests with ozonization of room air allow no very valid conclusions which might be applied to the ventilation of rooms using ozonized fresh air".

In general, it has been used in concentrations of one part in two to four million. Recently the suggestion has been offered that it might have value if used in concentrations of one part to ten million.

No convenient method has been suggested for determining or regulating the degree of concentration of the ozone in field work.

Within the last two to four years there has come about a general agreement that the physical, rather than the chemical, properties of our atmospheric surroundings were of the greater importance. Despite the new significance lent to the chemistry of the air by the appetite experiments of the New York State Commission on Ventilation, above referred to, there is ample warrant for this belief.

Temperature, humidity and air movement are the three physical properties of the air upon which emphasis is now laid.

Haldane, Flügge, Paul and Heymann in 1895, and Flack, Rowlands, Walker and others later, reported many experiments demonstrating that these factors had a more direct bearing upon comfort than did the chemical qualities of the air. Thus the ill effects of high temperatures, especially when combined with high humidity, are generally recognized. Experiments of the Ventilation Commission show a reduction of work voluntarily done of 37% at 86 degrees and 15% at 75 degrees, as compared with 68 degrees, all tests being made with 50% relative humidity. These tests also gave positive indications of disturbances in the regulating and circulatory systems of the body.

In explanation of the statement that humidification is expensive, it may be explained that about one horsepower of boiler capacity, utilizing four to five pounds of coal each hour, is required to humidify to 50% each thousand cubic feet of air supplied per minute for ventilation in zero weather with a room temperature of 70 degrees. And this is about three times the boiler capacity and fuel that might be saved by a reduction of ten degrees in room temperature.

It is undoubtedly true that a raising of the relative humidity makes comfortable a lower temperature, i. e., sixty-eight degrees and fifty percent relative humidity is quite as com-

fortable as seventy-two degrees and twenty percent relative humidity, and decidedly more healthful.

During the next two years the Ventilation Commission is to study this problem. It is hoped that this study and the work of other investigators may, within this period, produce satisfactory conclusions upon this subject.

Dust, as it ordinarily exists in the occupied apartment, is not generally considered seriously harmful. The fear of its bacteria-bearing proclivities has gone the way of the theory of areal infection. Nevertheless our desire for ordinary cleanliness will bring about the elimination of the dust nuisance to the greatest possible extent, and in no place with such care as in the hospital, for here the last degree of danger of germ-laden dust must be removed. Especially is this so because of the lowered vitality of the hospital patient.

The following, by Prof. Winslow and I. J. Kligler (Am. Journ. of Public Health, Vol. 2, No. 9) is in accordance with the generally accepted view of the dust problem:

> "While suggesting that dust inhaled or ingested in considerable quantities may be a real factor in the spread of certain diseases, we do not in any way dissent from the conclusion now generally accepted by sanitarians that in comparison with more or less direct contact and food infection it is quantitatively a minor one".

Many of the trade dusts constitute a really serious menace to the health of the workers, especially the hard sharp metallic dusts such as those incidental to cutlery grinding, stone finishing, and similar trades. Prof. Winslow states that "a great many more men die of industrial tuberculosis than are killed in mine fires and boiler explosions, with railroad collisions thrown in". No phase of ventilation is of greater importance than the elimination of trade dusts by suitable mechanical exhaust systems. That this is becoming recognized is evidenced by the fact that the most of the States now have laws requiring the removal of such dusts by ventilation.

Little or no change has been made to date in the volumetric standards of ventilation as established many years ago. These standards, however, find a new basis in the present day conception of ventilation, i. e., that it is the province of ventilation to remove the heat and moisture produced by the occu-

pants of the room to be ventilated. To illustrate: 30 cu. ft. of air per minute per occupant has heretofore been considered the amount of air required to be supplied to maintain a certain standard of purity of air in the school room and in many other rooms. It is this amount of air which is required to remove the heat and moisture given off by one person, when introducing the air into the room at ten degrees less than the room temperature, which is about as low as is possible without causing drafts or chilling of the occupants. This new basis for determining the volume of air required for ventilation is the rational one, and is recommended by Rietschel, Winslow, Franklin and others. Experience has thoroughly demonstrated that this volume of air, constantly and properly introduced and diffused throughout the occupied space of the room, will absorb and carry off the heat and moisture given off by the occupants thereof and give satisfactory ventilation. To what extent this may be affected by different degrees of air diffusion, by different systems of ventilation, or by the conditions of the occupants of the room is not yet determined.

Air movement is now regarded as a most important element of ventilation. Stagnant areas in an occupied room mean heat and moisture accumulations to an uncomfortable degree. The well known experiments of Dr. Leonard Hill and his associates have conclusively proven that air motion may go far towards preventing heat retention in the body and produce comfort in an atmosphere of high temperature. Without air movement the heat and moisture of the body will form a hot moist so-called "areal envelope", producing all of the discomforts experienced in high temperatures and humidities. But that this air movement should be produced by currents of fresh air is an assertion which seems warranted by the results of the appetite experiments of the Ventilation Commission above referred to.

There is a constantly lessening dread of drafts. Many of the diseases formerly believed to have their origin therein are not now so regarded. There is also a growing appreciation of the value of room perflation.

Occasionally the statement is made that air is robbed of its freshness when heated, or is in some mysterious way devital-

ized. Not a shred of evidence exists to support this contention as applied to a modern ventilating system. If it were so, no defense of the direct radiator could be made, for the temperature therein is exactly the same as the temperature within the blast coils of the indirect or fan ventilating system. But there is believed to be no possibility of ill effect to the air in either case, and both have their place.

Reasonable objections might be offered to the excessive air temperatures which were in some cases formerly used in blast or furnace systems of heating. The air from the modern ventilating system is usually introduced into the room at approximately room temperature and never at over one hundred degrees, even in systems having no direct radiators, nor does it ever come in contact with heating surfaces of a temperature of over 215 degrees to 225 degrees. At no time has it been possible, however, to find in steam-heating systems air temperature up to 400 degrees, as has been asserted; for this temperature is equivalent to a steam pressure of three hundred pounds per square inch. In defective furnace systems or in the case of air heavily ladened with dust coming into contact with high temperature surfaces (for which there is no excuse), it is possible that the air may be injured in its passage through the heaters by the absorption of gas from the furnace or by the distillation of carbon monoxide from the dust in the air.

But little artificial cooling work has been attempted and the advantages obtained therefrom have not been clearly established. The proven ill effects of high temperatures lend the subject of artificial cooling added importance. A very limited amount of artificial cooling work has been attempted in banks, residences and hospitals.

The cost of artificial cooling is very high. In the matter of installation, approximately seven tons of refrigeration capacity is required for each ten thousand cubic feet of air per minute supplied by the ventilating plant; but if the plant is especially designed for cooling purposes, the amount of air used may be somewhat less than that usually supplied for ventilating in winter.

The best method of cooling, which is a development of recent years, is by the means of a ventilating plant containing an

air washer, the water circulated therein being cooled by a refrigerating plant. If the power plant of the building is large and is to, or does, include an absorption type of refrigerating plant, so that the operating force is not necessarily increased, the operating expense of the air-cooling plant is small, being limited practically to the expense of the water used by the refrigerating plant (much of which may be saved and used again for other purposes), and oil, waste and repairs. Where a compression type of refrigerating plant is used, the expense for cooling becomes much greater, the cost of cooling 10 degrees being about equal to heating to 70 degrees in zero weather.

Experimentation with recirculated air has been reported by Professor Bass in Minneapolis, and by Dr. McCurdy at the International Y. M. C. A. College Gymnasium, in Springfield, Mass. The former, with reduced air volumes but with individual air supply, experienced difficulty with odors which the use of an air washer did not eliminate. The use of ozone appears to overcome this difficulty. Much larger volumes of air than are customarily employed in ventilation work were used by Dr. McCurdy, and by the use of the air washer freedom from odors was secured. A large theatre in Boston has been ventilated throughout the last winter, with recirculating air passing through an air washer, with entire satisfaction and a marked economy in fuel.

A preliminary experiment by the Ventilation Commission in the use of recirculated air has met with difficulties from odors. Further experiments along this line are to be carried on to determine the efficiency of recirculation as a method of ventilation, the possibility of eliminating odors, and the relative economy of operation. For the present, no recommendation favoring recirculation may be made.

Natural, or window, ventilation is receiving more endorsement than ever, but as yet no scientific data are offered to prove that it is equal or superior to artificial ventilation. It has been especially urged for schools and hospitals.

The following is quoted from a paper by the author on "The Heating and Ventilation of School Buildings".

"Usually a small class is the subject of this experiment, the class being conducted by specially selected and enthusiastic teachers; the students are given short lesson periods, ample rest periods, sleep periods and exercise

periods. They are given special medical attention. Their physical welfare and mode of living are more or less subject to the care of nurses, their homes are visited to see that the best possible conditions are provided therein for the children, they are provided with medicines and furnished with special lunches. With all these helps it would be strange indeed if the physical and mental progress of these children were not remarkable. But is there any assurance therein that the progress made is due solely to fresh air, or that similar results could not be obtained in closed rooms properly ventilated?

"Experiments recently made seem to indicate that the elimination of the special diet alone lessens the results obtained in the open air school-rooms. What the results might be with the elimination of one or more of the other special features is not known. Whether similar results can be obtained in a closed room with a similar regime is not known.

"Manifestly a breeze can produce an air current through the windows upon but one or two sides of a building. The rooms on the other two or three sides of the building must fail to receive the proper air supply.

"It should be easier to secure proper results by selecting one capable engineer to operate a well designed and well installed system than by placing dependence upon a large number of people who have many other duties to perform and who know little of either the importance or method of operating the windows or plants to secure the best room conditions".

The following quotation is taken from Dr. James Alexander Miller's admirable paper on "Hospital Ventilation from the Point of View of the Clinician".

"What, after all, is this open air on which we insist so strongly? Is it anything but the atmosphere with varying degrees of temperature, moisture and pressure in varying degrees of motion, together with certain impurities, chemical, bacterial or dust?

"Dust and bacteria in excess are always to be avoided, and certain varieties are harmful even in small amounts. In the open air as such, can we adequately control these factors, and if we could, do we know just the ideal combination we would have?

"The outside air may be cold when our patients need it warm, it may be dry when they need it moist, and vice versa, and moreover, the dust problem of open windows cannot be overlooked.

"For years ventilating engineers have been asking us what condition of air we want, and we have no reply but "fresh air". This evidently may mean any variety of that very changeable article. It may well be that open windows are better than artificial systems, but we cannot say so definitely until we can state just what we are trying to accomplish. When this is stated the problem becomes one of engineering and economics.

"By open window ventilation are we not apt to get too much air for some patients and too little for others? Can we regulate the problem, of drafts near the window and pockets of stagnant air in the corners?

"Then again it is evident that open window ventilation can never be automatically regulated. In wards this regulation would naturally devolve on the nurses, although the physicians should of course supervise it. With the multitude of other duties can we trust physicians and nurses systematically to employ the care and intelligence necessary?

"Certain it is, however, that even now the artificial system alone seems insufficient and that periodic flushing of wards with air from open windows seems reasonable and necessary. But on the other hand, it seems probable that open windows alone will be unsatisfactory.

"That the open air with all its variations when directly admitted to the wards may by no means always prove of just the desired condition, and that its proper distribution to all points of the ward may be most difficult, seems very probable. It would appear, therefore, that at present a combination of these two so-called systems is desirable, especially when we remember that in winter a heating system is always necessary and that ventilation is a natural corollary of the heating problem".

Most of the failures of the ventilation work of the past may be justly attributed to insufficient appropriations for the installation of ventilating systems and for their maintenance and operation. Very many installations are incomplete, ill-designed, and installed with the use of unsuitable or cheap apparatus and material.

Noisy apparatus and systems are often urged as an objection to heating and ventilating plants, but the presence of noise of any kind is quite unnecessary and is evidence only of lack of skill in design or installation. Failure to maintain proper upkeep and repairs is responsible for many of the failures of ventilating plants. Were the upkeep and repairs of the buildings themselves neglected to the same extent as occurs in the case of the heating and ventilating plants, a great many buildings would annually become positively unsafe for occupancy.

Possibly the most frequent and the most serious cause of failure is the absence of proper skill in operation. It is annoying to note the number of plants which are operated by boys or janitors who know absolutely nothing of the rudiments of fuel burning or care of a steam plant or of a ventilating system. Such men often waste, daily, fuel costing more than the gross amount of their wages. The loss in repairs and maintenance of the plant is more important still, and the loss in the efficiency of the plant is vastly more serious.

Often, too, there are such restrictions applied by the auth-

orities to the operation of the plant or the janitor that the proper operation of the plant is impossible. If a school board directs that the ventilating plant must not be operated before December first, or after April first, regardless of outside weather conditions or the needs of the building, is it to be wondered that complaints of insufficient ventilation are often heard? If the janitor is offered a bonus for saving coal is it surprising that the ventilation suffers? If it be further required that he must at all times operate his fan engines, should it be regarded as remarkable that he removes the belt between the engine and fan? Thus he saves coal and yet operates his engine, even though no air is being supplied to the building. Manifestly the building suffers for lack of ventilation, and the ventilating plant is charged with failure.

Very few of the vast number of school buildings erected in this country are provided with automatic recording instruments to determine the efficiency of the operation of the heating and ventilating plant, either from the standpoint of fuel consumption or as to the results obtained in the building. Such instruments intelligently used would largely reduce operating costs and improve plant operation. In very few instances is there any system of supervision to assure the proper maintenance of the economical operation of the ventilating and power plant. In a few instances such supervision is in vogue, with results in economy and efficiency which have more than justified the expense of the system of supervision. These, and other similar conditions, might be cited to explain failures of artificial ventilating systems, but therein is no ground for the condemnation of the artificial ventilating system properly installed and properly operated.

A criticism which may possibly be directed against heating and ventilating engineers is that they have too often submitted to the imposition of conditions making success impossible, usually due to restricted appropriations for the installation of the heating and ventilating plant. It is to be regretted that every consulting engineer will not decline to undertake the design of a plant for which a sufficient appropriation is not made, just as it is to be regretted that a building committee will insist that an architect shall undertake to provide plans for a larger building than may be well built for the money available, or that

other committees will insist upon an ornamental structure or the use of stone, marble or other decorative materials at the expense of the heating and ventilating equipment, even though the latter is that element of the building which means most for the health and comfort of the children.

In the field of the mechanics of ventilation there has been very little in the way of new developments. We are today using the same types of boilers, trimmings, draft apparatus, piping equipment, insulation, valves and other materials that were in use ten years ago. Such developments as there have been in these equipments have been in the nature of refinements in manufacture and installation. There is a constant trend towards a higher grade of manufacture and installation, which is encouraging. The most noticeable are those relating to fans and air washers.

Ten years ago the ordinary steel-plate fan was most generally used for ventilation work of importance. The Multiblade fan, while invented abroad in 1900, was not imported into this country until 1904, and was not manufactured here until 1908, after which its general use grew very rapidly.

The mechanical efficiency of the old type of steel-plate fan may be approximately stated as 45%, but if built with narrow and high housing, with two inlets, an efficiency as high as 55% may be secured.

The Multiblade fan in the smallest sizes will average 50% to 55% efficiency, in medium sizes 60% efficiency, and claims of 80% efficiency are made for the largest sizes of these fans as applied to mine ventilation.

Varying claims for general efficiency are made and may be largely explained by varying methods of testing.

In the minds of those familiar with the art of ventilation as practiced today it is generally felt that air washing is a recent development. However, the writer has come across a reference thereto in a book by Dr. D. B. Reid, published in London in 1844, from which the following is quoted:

"In crowded cities where the general purification of air may be deemed most desirable, and in the vicinity of manufacturing operations, or where peculiar, offensive products may be developed, the following are the principal arrangements which I have adopted:

> 2. Washing with water, so as to remove more effectively the smaller particles—the air being forced to pass through an artificial shower''.

This is one of several suggestions which he offers. It carries the suggestion of the modern air washer.

The commercial air washer, as now known in ventilation work, was first produced in 1901, but it was not until about seven to nine years afterwards that it entered prominently into the field of ventilation. Since that time the adaptation of the air washer was broadened rapidly in ventilation work, and more especially in the industrial field.

About 1906 the possibilities of the air washer as a means of artificial cooling were recognized, and about 1908 the possibilities of the use of the air washer in artificial humidification work were realized. The air washer is now found to be the most satisfactory device for use in artificial humidification work, for dehumidification, and for air cooling purposes, with or without a refrigerating plant, the latter being required where a constant amount of cooling is required independent of outside weather conditions. The air washer provides the only satisfactory means of efficiently cleansing the air. This device has practically supplanted the old forms of bagging and cheese-cloth air filters.

The most encouraging development of recent years within the field of the heating and ventilating engineer is the increasing appreciation of the application of devices tending to improve the efficiency and economy of heating and ventilating plants, including the use of coal scales, boiler feed-water measuring devices, recording thermometers and fuel calorimeters. The use of such devices and the constant improvement in the manufacture and installation of apparatus used in connection with ventilation installation, together with a better understanding of the real problems of ventilation and the methods of solving same, lend much hope for the future of the art of ventilation.

DISCUSSION

Mr. C. W. Baker,* in referring to Mr. Kimball's paper on Humidity and Health, said that in the East, with weather of zero or lower temperature and the necessity of raising the interior temperature to something like 70°, it is of great advantage to add moisture to the air. In heating plants for private residences, however, provision for increasing humidity has been generally omitted. Mr. Baker.

As an example of a simple plan of obtaining humidity with a hot-air furnace: in a house heated by hot air, the conservatory has a brick-lined well formed in the floor (which is of concrete on an earth fill), with a hot-air flue entering the rear of the well. Each course of the bricks is laid narrower than the course below, forming a series of shelves. On these shelves are placed shallow galvanized iron pans 1 inch deep, leaving an air passage 1 inch high over each pan. These pans are filled with water, the highest pan overflowing into the one below, and so on. A concrete slab covers the well, with a register opening at the end opposite the hot-air entry. In this way the hot, dry air from the furnace passes in thin layers over the water surface and is effectively moistened.

In a steam heating plant with indirect radiation, a large shallow copper pan is placed on top of the heating coils and is kept filled from a tank outside, water in which is maintained at constant level by an automatic float valve.

Mr. Paul F. Johnson,† Mem. Am. Soc. M. E. (by letter), believed that Mr. Kimball's statement, that the best method of humidifying and dehumidifying the air is by means of air washers, should be considerably modified. In cases where air washers are necessary, the humidifying can probably best be accomplished with the air washers, but there are many instances where air washers are not necessary and would prove a very expensive method of humidifying the air. In such cases, especially in small buildings and residences, he believes that the simplest and best method of humidifying the air is by means of steam humidifiers. As the boiler is merely a heating boiler, not supplying any engines, and consequently having no oil in the return steam, the steam jet humidifier will answer all purposes. But on the other hand, where the boiler is also used for running engines and the steam contains disagreeable odors, the pan humidifier is the best. By pan humidifier is meant a copper pan filled with water kept at a constant level by means of a float valve and heated by a coil of brass pipe through which live steam is circulated, thus vaporising the water and humidifying the air. Both forms of steam humidifiers have been very extensively installed throughout the country and are giving absolute satisfaction. Mr. Johnson.

A humidifier of any type, however, to give good results, must be controlled by a humidostat or humidostats in one or more of the rooms of the building which is to be humidified. Mr. Leland's remarks as to the difference in humidity between the plenum chambers and the rooms shows the

* Editor-in-Chief of Engineering News, New York City.

† Secy. and Treas., Johnson Service Co., Milwaukee, Wis.

Mr. Johnson. fallacy of attempting to control the humidity by means of controlling the temperature of the air and water of the air washers.

Mr. Kimball does not explain in his paper how de-humidifying is accomplished by means of the air washers, and the writer felt that this might be explained a little more fully by Mr. Kimball or by someone who is familiar with the use of air washers for this purpose.

Mr. Kimball. **Mr. D. D. Kimball,** in closing the discussion of his paper, offered the following remarks:

Referring to the comments of Mr. C. W. Baker on "Humidity", both suggestions made by him are admirable but applicable to a limited field. As far as the author knows there is no humidifier commercially sold for this purpose.

Referring to the remarks of Mr. Paul F. Johnson, the use of the air washer for humidifying is especially applicable to large ventilating installations. The use of steam humidifiers is limited to small plants in which the water from which the steam is made is entirely free of foreign matters, particularly oil. This method, however, may be used in small installations, but should be controlled automatically by means of a humidostat. The pan humidifier as described by Mr. Johnson is largely used in plants having no air washers, but the method of automatic control as applied thereto is the same as the automatic control applied to air washers and any objections offered to one are applicable to the other. However, the fact is that most satisfactory results are obtainable in the control of humidity by the control of the temperature of the air or the temperature of the water in the air washer.

Noting Mr. Johnson's question as to the methods of dehumidifying with air washers, this is well understood by ventilating engineers. It is accomplished by the use of cold water, sometimes obtained from deep wells but more often secured by the use of refrigerating machines by means of which cold brine is circulated through Baudelot coils placed in an enlarged water tank at the base of the air washer, a portion of these coils being submerged in the water while the balance of the coils are exposed to the dripping of the water from the washer sprays. Water thus cooled is circulated through the spray chamber at a temperature low enough to cool the air to the desired dew point, or the point where the air will contain that amount of moisture required to give the correct temperature and relative humidity in the rooms to be cooled.

Paper No. 236

VACUUM, VACUO-VAPOR AND ATMOSPHERIC HEATING SYSTEMS.

By

JAMES DAVID HOFFMAN, Mem. Am. Soc. M. E.
Prof. Mech. Engrg. and Pract. Mech's, University of Nebraska
Lincoln, Nebraska, U. S. A.

GENERAL STATEMENT.

The growth of any enterprise is largely the result of a public demand based upon necessity and convenience. Most improvements in heating systems have come about because of the influence of such a demand. Improved building construction, concentration of the population in small areas and the gradual increase of property values, together with the rapid improvement in building equipment for home and school as it relates to the health and comfort of the occupants, have been the influences stimulating development. An analysis of the great changes in the methods of steam heating that have taken place in the past twenty-five years shows that the response has been as prompt as material possibilities would permit. In this short space of time steam pressures in radiators and coils have dropped from fifty and sixty pounds gauge to atmosphere and below, and, in some cases, the return lines have been opened direct to the atmosphere. The modern steam-heating system resembles its ancestors of a quarter of a century ago fairly well in outward appearance, but is very unlike them in principle of operation. The earlier systems produced circulation by increasing the pressure on the supply, while the tendency at the present time is to reduce the pressure on the return. Figs. 1-6 show this development.

TENDENCY IN HEATING DEVELOPMENT.

Fig. 1. High- to low-pressure, one- or two-pipe, dry- or wet-returns, gravity-return system. This has been the basis for all

the modified systems of recent years. It is simple in design, general in use, but comparatively inflexible. It is not well adapted to light continuous service.

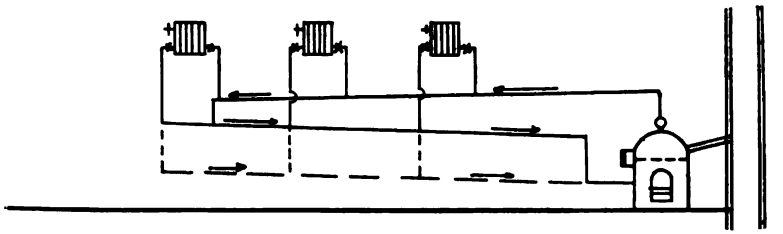

Fig. 1.

Fig. 2. Low-pressure steam, air-line vacuum, one- or two-pipe, gravity-return system. To adapt the simple steam system to light and uniform service, as well as to heavy service, it was fitted with an air line and a mercury-column attachment which permitted the escape of the air when under pressure, but sealed

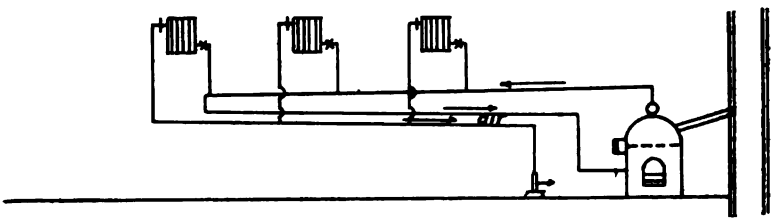

Fig. 2.

the system against air entrance when cooling down. This reduced the time of the dead period of the boiler at night by permitting steam or vapor below atmospheric pressure to circulate, when otherwise the radiators would be cold. Used especially on residence plants.

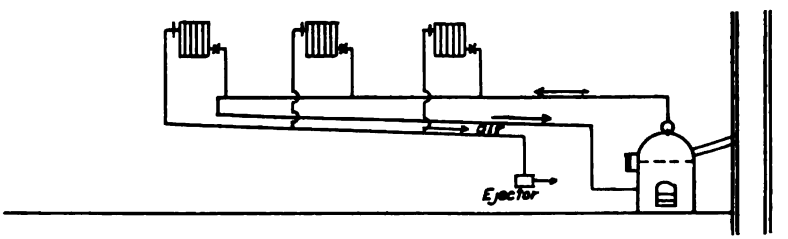

Fig. 3.

Fig. 3. Low-pressure steam, air-line continuous-vacuum, one- or two-pipe, gravity-return system. This system differs from the one just described in that a continuous vacuum was made possible in the air line by substituting an ejector for the mercury column. This change provided for larger capacity, insured the entire heating surface as effective, and substantially reduced the radiator pressure. Used on plants of medium to large capacity.

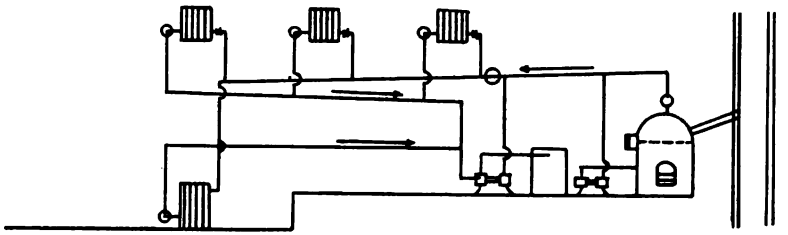

Fig. 4.

Fig. 4. Low-pressure steam, return-line continuous vacuum, two-pipe, pump-return system. In this the vacuum principle has been extended to cover not only the continuous elimination of the air from the radiator, but to assist in the return of the water of condensation to the boiler. The vacuum pump on the return line handles both water and air. Used on plants of medium and large capacity.

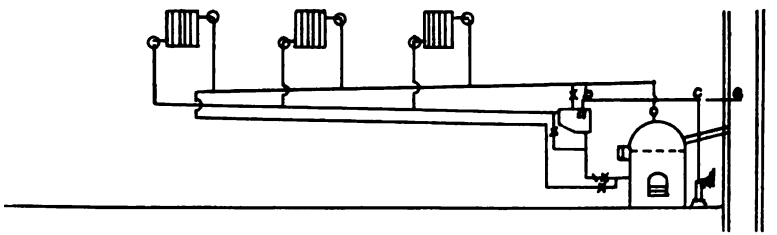

Fig. 5.

Fig. 5. Near-atmospheric pressure, two-pipe, gravity-return system. Radiators controlled, both inlet and outlet. The pressures in the radiators and the return main are approximately atmospheric. Return main opens to atmosphere, either free or through special valve. Used on residences.

Fig. 6. Atmospheric-pressure, two-pipe, gravity-return system. Radiators controlled at inlet and open to atmosphere on end of return. This shows the most recent tendency toward simplicity. Used on residences.

CLASSIFICATION OF SYSTEMS.

As a basis for further discussion, reference will be made to specific systems, with the understanding that these systems are used as typical illustrations only. Others might be mentioned if space would permit.

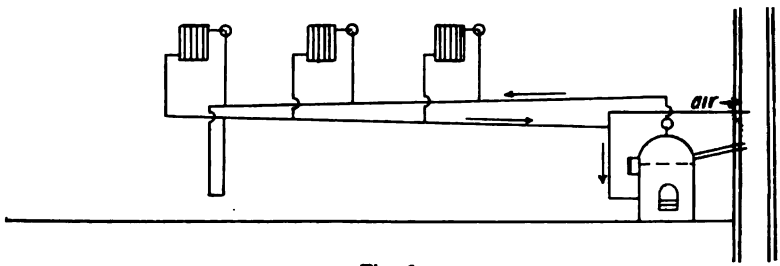

Fig. 6.

Vacuum, Vacuo-Vapor and Atmospheric Heating Systems.

I. Pressure fairly constant. Positive vacuum produced by mechanical means, such as pumps, ejectors and condensers.

A. Air and condensate returned by same line. Two-pipe. Gravity circulation advised but not necessary.

1. Webster return-line vacuum system.
2. Dunham " " " "
3. Monash " " " "
4. Automatic " " " "
5. Reliable " " " "

B. Air and condensate returned by separate lines. One or two-pipe. Gravity circulation.

1. Paul air-line vacuum system
2. Reliable air-line " "
3. Sparks " " "

C. Air and condensate returned by same line. Two-pipe. Gravity circulation or small lift.

1. Moline return-line vacuum system
2. Dunham vacuo-vapor "

II. Pressure variable from atmospheric plus to atmospheric minus. Vacuum produced principally by condensation within the radiators.

A. Air and condensate returned by separate lines. Low pressure to vacuum, variable. System open to atmosphere through air line and mercury, thermostatic or ball check trap. One-pipe. Gravity circulation.

1. Mercury-seal vacuum system
2. Eddy " "

B. Air and condensate returned by same line. Atmospheric pressure or slight variation. System open to atmosphere at end of main return. Graduated inlet valve, with or without control outlet valve. Radiator water type, top supply, bottom return. Gravity circulation.

1. Atmospheric system
2. Broomell vapor system
3. Reliable " "
4. Mercury-seal vapor system
5. Illinois modulating "
6. Webster modulation "

VACUUM SYSTEMS.

(Classification I. A.)

Mechanical Vacuum.

Air and Condensate Combined:—The term "vacuum heating" may properly be applied to that class of heating systems (Fig. 4) having a continuous negative pressure within the return main, the pressure within the radiators being controlled by the interposition of some form of thermostatic or float valve between the return main and the radiators. The vacuum may be produced by pumps, ejectors or condensers. In point of design this is probably the extreme in its departure from the original high-pressure gravity system (Fig. 1), and has the following advantages:

1. A positive and easy return of the water of condensation. In case of improper alignment of return pipes, the negative effect of water and air pockets is reduced to a minimum.

2. Radiation at low levels may be drained with comparative ease by maintaining a vacuum proportional to the lift of the water of condensation.

3. Return pipes of reduced size may be substituted for those of the ordinary gravity system, because of the positive and rapid withdrawal of the water of condensation, thus making it less unsightly, and, in some cases, actually reducing cost.

4. Positive, continuous withdrawal of the air from the heating system with the water of condensation. This insures a circulation of the heating medium within the radiators, eliminates short circuits and gives a high efficiency of all the heating surface.

5. Especially adapted to the use of exhaust steam with its extra-large air and water content.

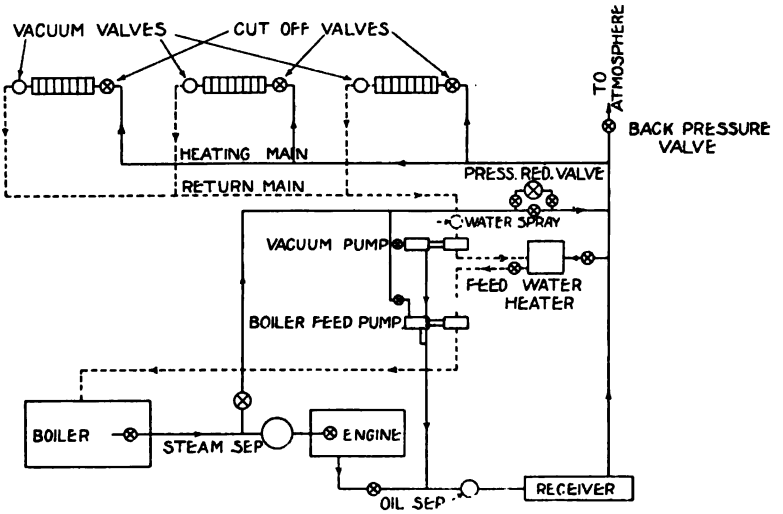

Fig. 7. Vacuum Heating System.

6. Comparative freedom from pounding and water hammer.

On the other hand the disadvantages are the small additional cost in maintaining the vacuum and the restrictions to its use in small plants because of the extra cost of installation and superintendence. Such systems of heating are usually installed in connection with lighting or power units where exhaust steam may be used in place of live steam. This substitution results in a great economy for the heating system. A diagrammatic view containing the principal apparatus involved is shown in Fig.

7. Exhaust steam is delivered from the engines, pumps or other power apparatus to a receiver and thence to the heating

system at a pressure of approximately five pounds gauge. When the supply of exhaust steam is insufficient to maintain this pressure against the condensing capacity of the radiation, the pressure falls and live steam is automatically admitted to the system through a pressure reducing valve, in sufficient amounts to maintain the required pressure. The return line carries both condensation and air, and the pressure is atmospheric or below, the negative pressure being maintained just sufficient to insure a regular movement of the water of condensation in every line. This provides a system that responds quickly to any change of conditions. When the water of condensation, at 212 degrees or above, is released from the radiator through the vacuum valve to the returns, with pressure below atmosphere, the result is a very quick withdrawal and a partial reëvaporation of the water into steam or vapor at the lower pressure. If large amounts of condensation were released at the same time, the vacuum would be temporarily broken, but being divided into a large number of small units having no regularity in the time of action, there is no difficulty. Although the vacuum is supposed to extend only from the pump to the vacuum valve, it may extend to within the radiator if the vacuum valve is set for a constant discharge. Such an arrangement can not be justified from the standpoint of economy, since the latent heat of all the leakage steam is lost to the heating system and thrown away. Just before entering the vacuum pump the steam and vapor, mixed with the return water, are condensed by a spray of cold water. This spray is an important part of the system. From the vacuum pump the returns are pumped to a feed water heater and from this by a boiler feed pump back to the boiler. The Webster vacuum system, shown in detail in Fig. 8, is a typical representative of this class. The operation of this system is so well known that it will not require explanation. In all essential points Figs. 7 and 8 may also stand for a number of others, among them the Dunham vacuum system, the Monash noiseless system and the Automatic vacuum system. The automatic control valves on the radiator returns may be either thermostatic or float. Those used on the systems named are respectively, Figs. 28, 29 and 34; Fig. 31; Fig. 36 and Fig. 33. The Reliable vacuum system is somewhat different from others in this class, in that it is usually equipped

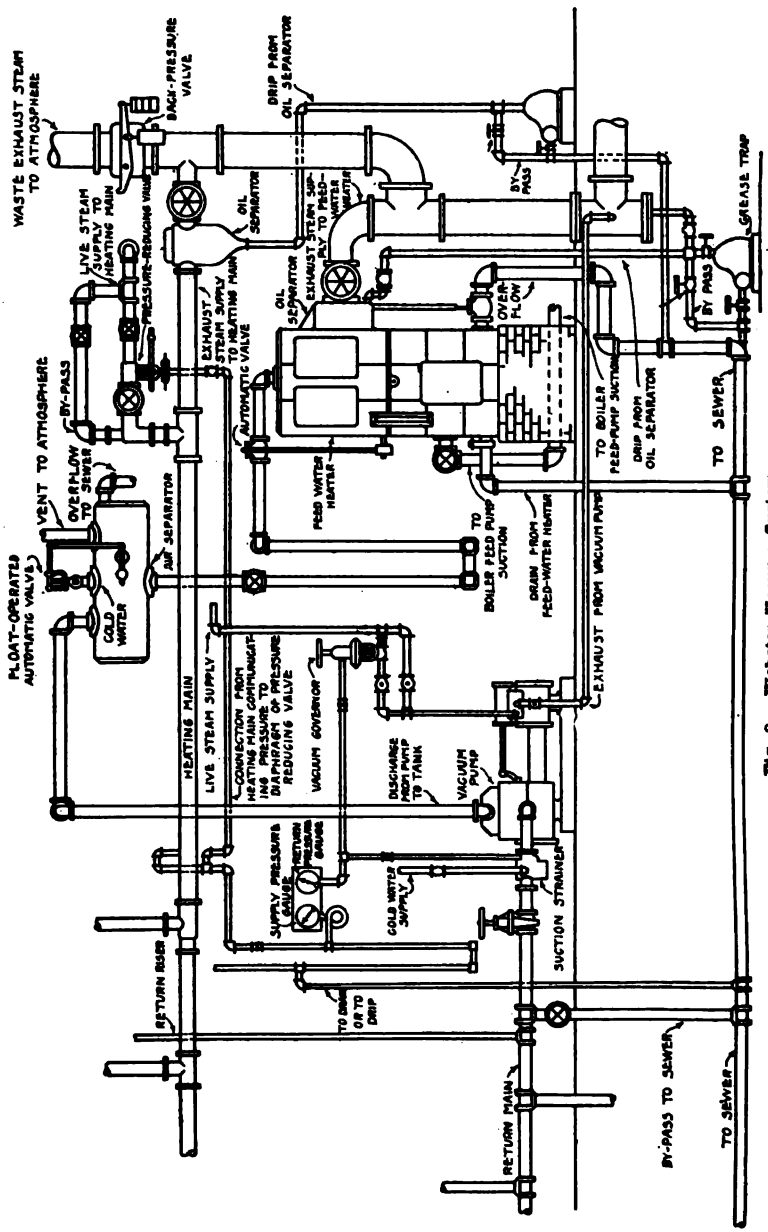

Fig. 8. Webster Vacuum System.

with an expansion tank on the return line, Fig. 9, and has an electric-motor vacuum pump instead of the usual steam pump or exhauster. The automatic radiator valve is shown in Fig. 32.

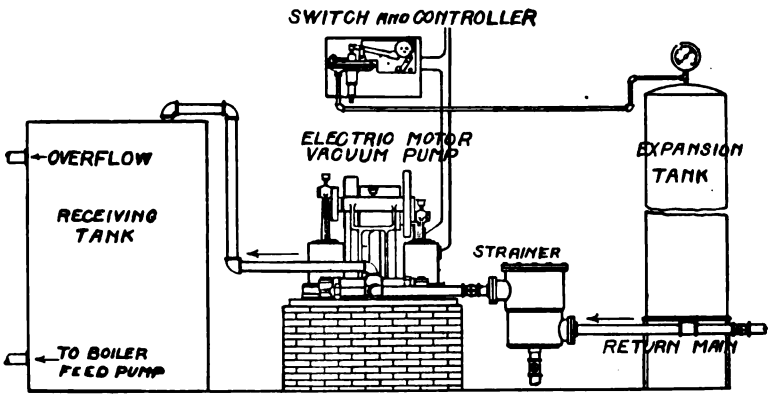

Fig. 9. The Reliable Vacuum System.

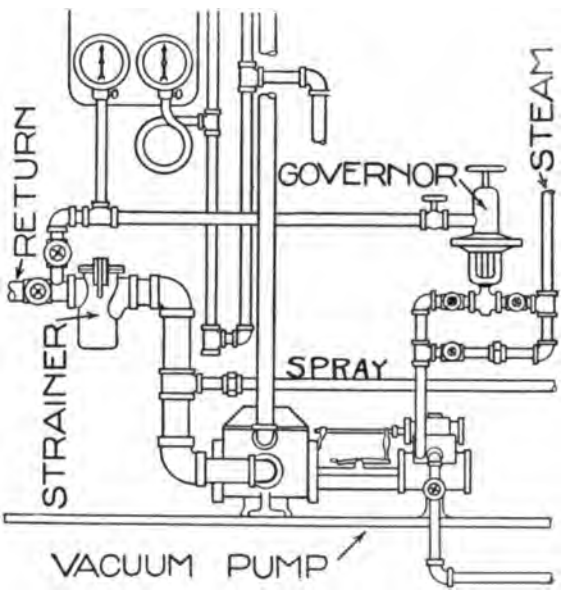

Fig. 10.

In regulating the vacuum pressure three systems of control are used, Fig. 10, (see also Fig. 8) where the suction pressure controls the steam supply to the pump; Fig. 11, where the suc-

tion pressure controls the amount of injection water admitted to the spray; and Fig. 9, where the suction pressure controls the electric switch to the motor.

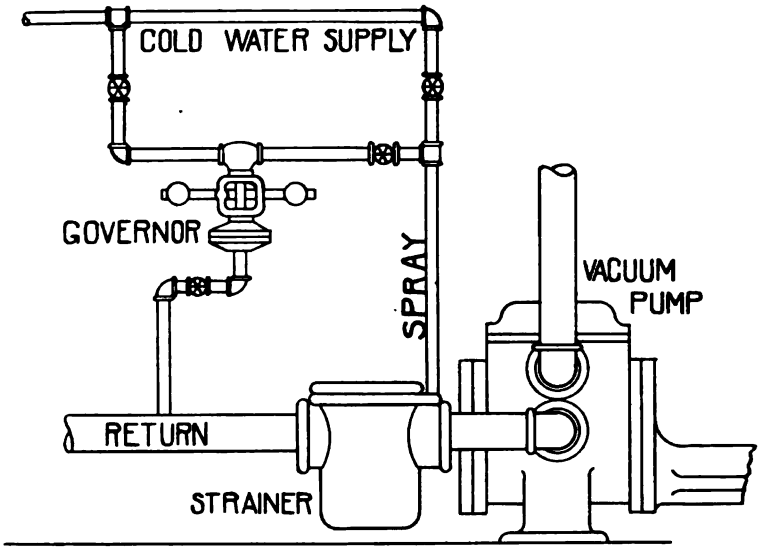

Fig. 11.

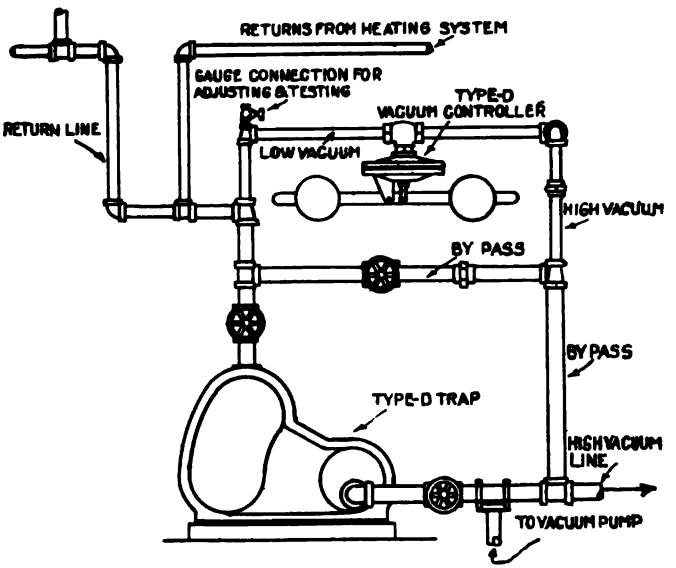

Fig. 12.

When returns from different levels are to be handled by the same pump, it is accomplished by placing a special pressure regulating valve in the vacuum line. By this arrangement the pump vacuum may be maintained sufficient to overcome any hydraulic lift, without unduly pulling on the gravity lines. Fig. 12, known as Type D of the Webster system, shows this clearly.

(Classification I. B.)

Mechanical Vacuum.

Air and Condensate Separate:—A modification of the mechanical vacuum systems, known as the Paul system, is shown in

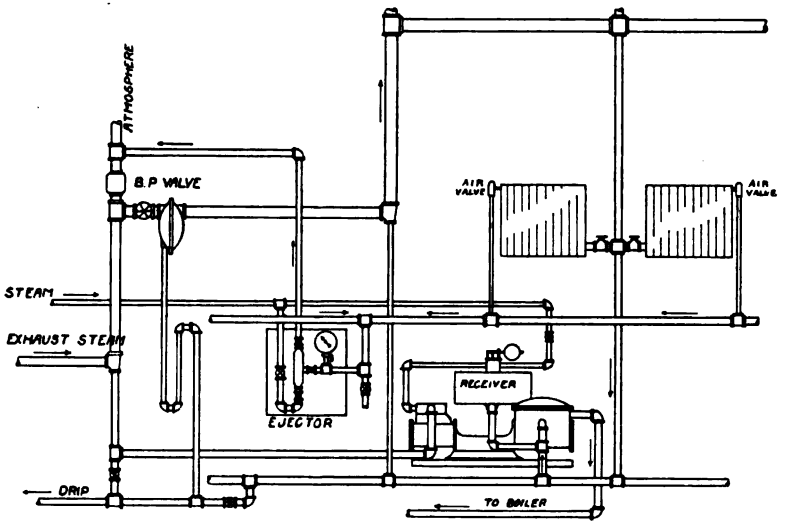

Fig. 13. Paul System.

Fig. 13. This is a one-pipe system, which is usually fed from an overhead supply and drained to a wet return. The pump handles only water and does not create a vacuum in the return main. The vacuum in the air line, connecting with the air valves at the radiators, is produced by a steam, air or hydraulic ejector which may discharge directly into the atmosphere, into the atmospheric end of the exhaust heating main or into a secondary radiator where a separation is made, the water dropping to a receiver to be further used and the air exhausting to the atmosphere. Fig. 14 shows in detail this last arrangement. For small

plants having one-pipe complete-circuit systems, the pump is omitted and the condensate flows direct to the boiler. The automatic air valve is of the expansion stem variety, Type B.

The Reliable one-pipe air line system is a modification of the Reliable two-pipe return line system. The vacuum on the air line is produced by an electric vacuum pump, but the condensation returns to the boiler by gravity. The automatic air valve is shown in Fig. 30.

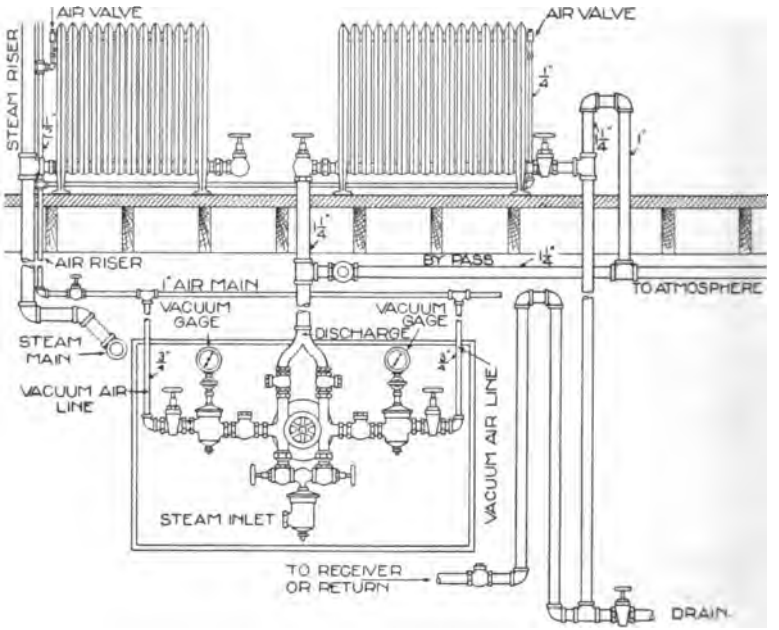

Fig. 14. Paul System.

The Sparks one-pipe air line system is very similar to the one just mentioned, having a simple gravity return with positive air line vacuum. In this case, however, the vacuum is produced by a condenser. Fig. 15 shows the application of this unique feature. In its operation, steam from the boiler and water from a cold supply are automatically admitted and cut off alternately from the condenser, C, each condensation thus tending to produce a partial vacuum and a corresponding pull on the air line without the necessity of installing power machinery. The de-

gree of vacuum is controlled by the size of the condenser and the number of condensations per minute. The automatic air valve is of the expansion stem variety, Type B.

VACUO-VAPOR SYSTEMS.

(Classification I. C.)

Closely associated with the two-pipe positive vacuum systems is a class of semi-positive, two-pipe systems with vacuum

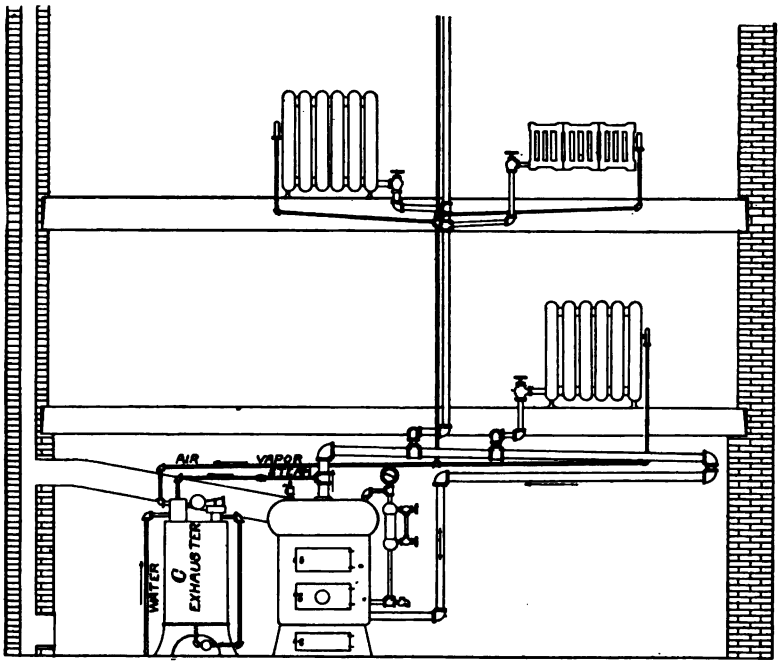

Fig. 15. Sparks System.

possibilities of varying degree assisting the gravity circulation. The pressures are approximately atmospheric throughout the radiators and the returns, and the latter open to the atmosphere through thermostatic or mercury traps near the boilers. The field of the semi-positive systems is the moderate sized plant, and the requirements are that they be inexpensive in installation, automatic and continuous in operation and that they require little personal supervision.

In the Moline system, Fig. 16, the vacuum in the return main is produced by the aid of a condenser (radiator or pipe coil) located above the end of the dry return near the boiler. An inlet connection to the condenser is made from the steam supply through an ejector, which is in direct connection with the end of the return main. An outlet connection from the condenser leads to the main return below the water line of the boiler and to the

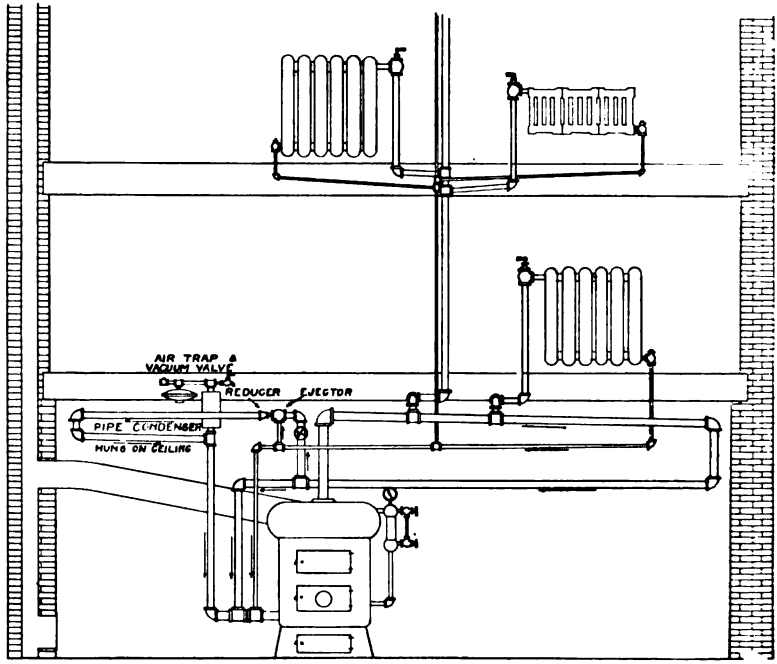

Fig. 16. Moline System.

air through a combined air trap and vacuum valve. This system presupposes a certain differential of pressure between the steam main and the return in order to operate the ejector. This differential may vary from one to three pounds, depending upon the capacity of the plant. The field of operation is very general, applications being made to plants of large as well as small capacity. No automatic valves are used on the radiators, the return end having a key operated cut-out valve.

In the Dunham vacuo-vapor system, Fig. 17, the condensation and air from the heating system pass through the thermal valve B and collect in receiver C, until the water line in the boiler has changed from a high level, E, to a low level, E′. When the low level is reached, riser pipe F is unsealed and steam flows.

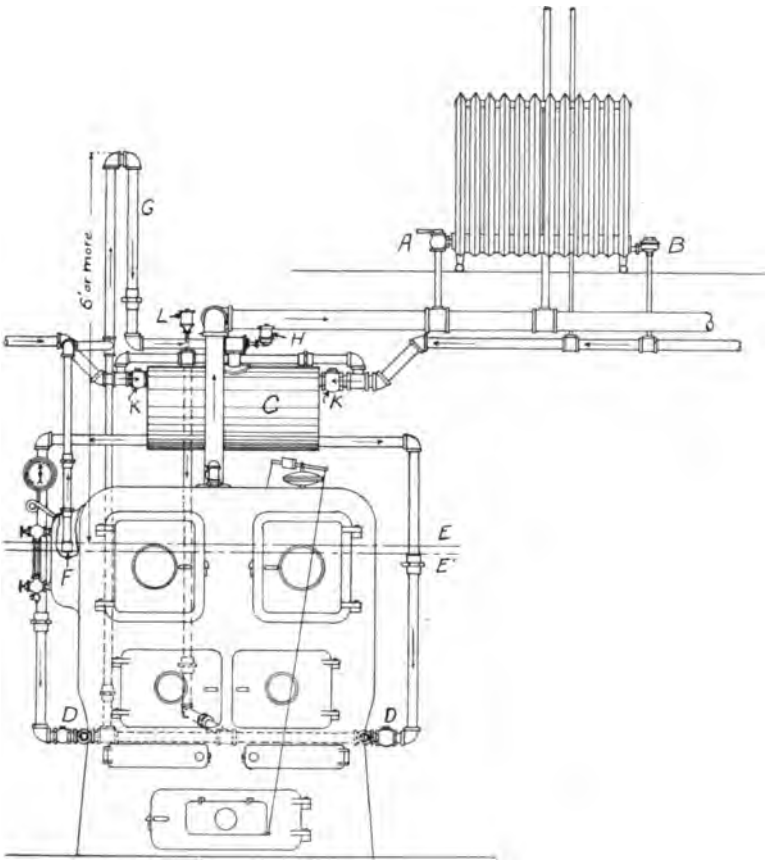

Fig. 17. Dunham Vacuo-vapor System.

through the equalizer pipe G, closing air valve H and check valve K. The steam entrance to C causes an unbalanced pressure in the return and the water content moves through check valve D into the boiler, thus sealing riser pipe F and cutting off steam connection with receiver C. When the pressures in re-

ceiver C and the boiler are equalized, valve D closes, valve K opens, and the steam within the receiver condenses, thus producing a partial vacuum in C and a pull on the returning condensation. An air valve, L, is placed on the return line so that air may be exhausted from the circulating system during the time when equalization is taking place. The differential pressure between boiler and receiver is sufficient to exhaust the air, in which case the system may act as a sealed gravity system, permitting the condensation to flow direct to the boiler without accumulating in the receiver. The automatic return valve is similar to Fig. 31.

(Classification II. A.)

Fig. 18 illustrates the well known Mercury Seal system, in which the air is expelled from the radiators through thermostatic valves and is excluded by the mercury trap. During service the steam closes the thermostatic valves and is maintained at any desired pressure. Ordinarily in starting, the pressure is first raised to one or two pounds above atmosphere and held there for a while to expel the air, after which the plant is allowed to cool off, the vapor continuing to circulate until the pressure drops very low. The advantages claimed for this system are:

1. Continuance of heat distribution over a greater portion of the twenty-four-hour day.
2. Greater flexibility for light as well as heavy service.
3. Less frequent firing.
4. A possible saving of fuel in that it is not necessary to raise the pressure to atmosphere before obtaining circulation for a day when but a little heat is desired.

The one essential in this system is that the joints and fittings be very tight, otherwise when the steam pressure is permitted to fall below atmosphere, there will be an inleakage, thus breaking the vacuum and rendering the vacuum principle inoperative. Packless valves are used. The automatic air valve is of the expansion stem variety, Type B.

A system that works quite the same as the one just described is the Eddy system, Fig. 19. In this a float vacuum valve, Fig. 38, is placed on the separating tank to exclude the air and produce a partial vacuum. Instead of the thermostatic valves, small

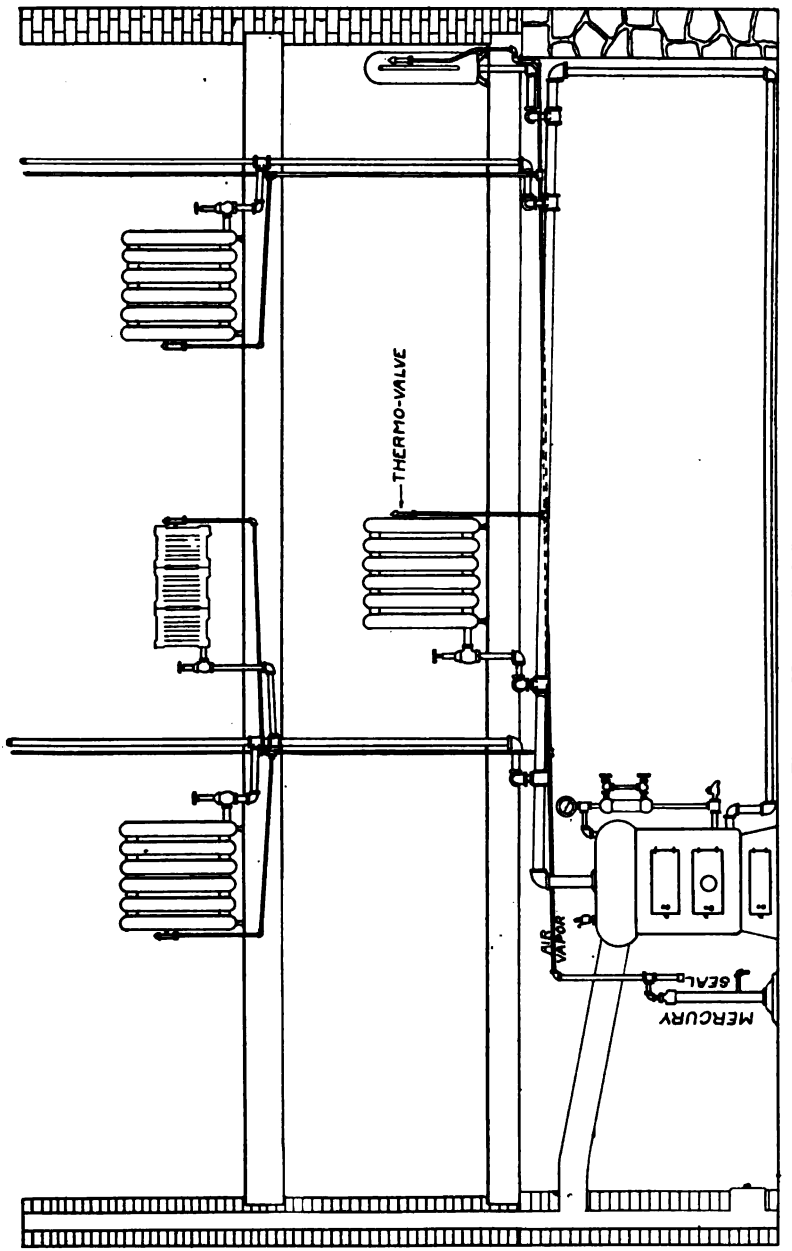

Fig. 18. Mercury Seal System.

non-adjustable nozzles, Fig. 41, are placed on the air lines at the radiators and on the top of the main return riser to provide constant leakage to the separating tank. The drips from the separating tank pass through a combined water seal and float check and enter the main return riser above the water line. Packless valves are necessary.

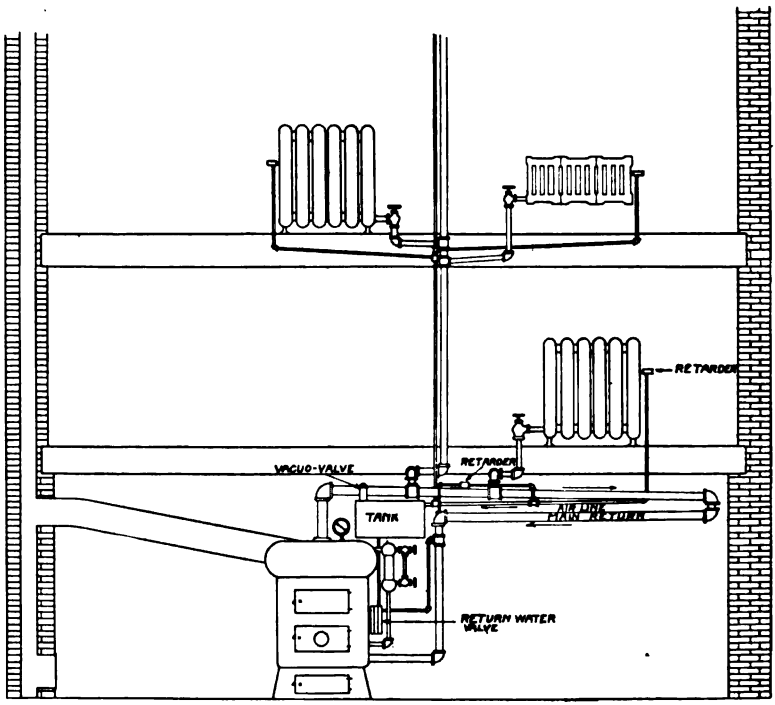

Fig. 19. Eddy System.

ATMOSPHERIC SYSTEMS.

(Classification II. B.)

Although the differences between the vacuo-vapor and the atmospheric systems, as at present constructed, are not easily distinguished and although a clearly defined separation can not be made, yet there are certain features of design that seem to be especially characteristic of this class. These features are the two-pipe type of radiator, the top supply and bottom return, the graduated steam supply and the return control. The term

atmospheric, as applied here, means that steam is maintained in the radiators, returns and other heating surfaces at approximately atmospheric pressure, regardless of the steam pressure in the boiler. To accomplish this the steam supply is in every case controlled by graduated supply valves, and the return main opens to the atmosphere without restriction for the release of the contained air through a receiver or separating tank. The top

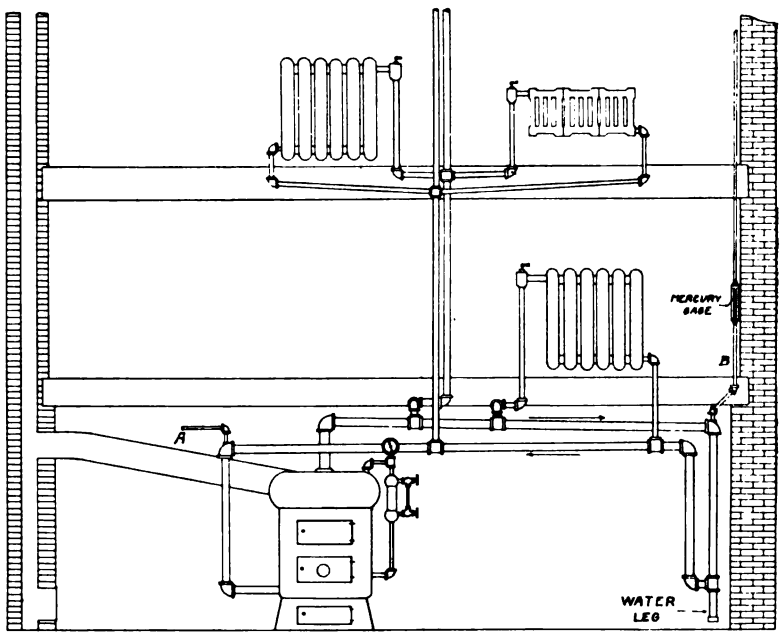

Fig. 20. Atmospheric System.

connection to the radiator insures an easy displacement of the contained air to the returns, no air valves being used.

Heating systems of this class are simple and less expensive than the average steam system, and if properly installed, are noiseless. They are flexible and adapted to light or heavy service, since the graduated inlet valve may be set to fill from only a fractional part of the radiator to the full radiator, as demanded. Regulation may be applied at the graduated inlet valve to the radiator, at the radiator outlet, at the atmospheric connection to the receiver, or at the by-pass from the main to the return.

Various combinations of these are made, from the simplest, where only the graduated inlet valve is used, to the most complicated, having a graduated inlet, a controlled outlet and a by-pass or thermo-valve on the receiver. In the uncontrolled return it is necessary to have such a relation between the maximum steam inlet and the square feet of radiation, that in no case will the surplus steam from any radiator short circuit to the returns of other radiators or waste to the atmosphere. This requirement suggests large radiators.

The Atmospheric system, Fig. 20, has only the graduated supply, the radiators and returns opening direct to the atmos-

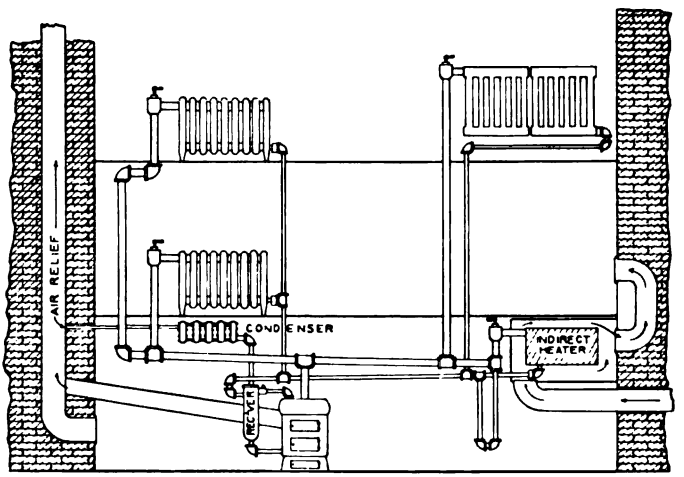

Fig. 21. Broomell System.

phere at A. A mercury pressure gauge, graduated to ounces and having a range of three pounds, is used at B, either on the main or on a riser to a radiator. This gauge is recommended in preference to the steam gauge at the boiler because of its accuracy in registering low pressures.

The Broomell system, Fig. 21, regulates the radiator supply, seals the radiator outlet and has in addition a receiver which serves at the same time as an atmospheric relief from the return and as a water sealed by-pass from the boiler. This by-pass acts when the steam pressure in the boiler exceeds a required amount. All steam vapor leaving the receiver with the air is con-

densed in the radiator or pipe condenser and drains back to the boiler. The air line continues from this condenser to the chimney.

The Reliable system, Fig. 22, regulates both the radiator supply and outlet. The end of the steam main connects with the return through a vacu-check valve, the return leads to the

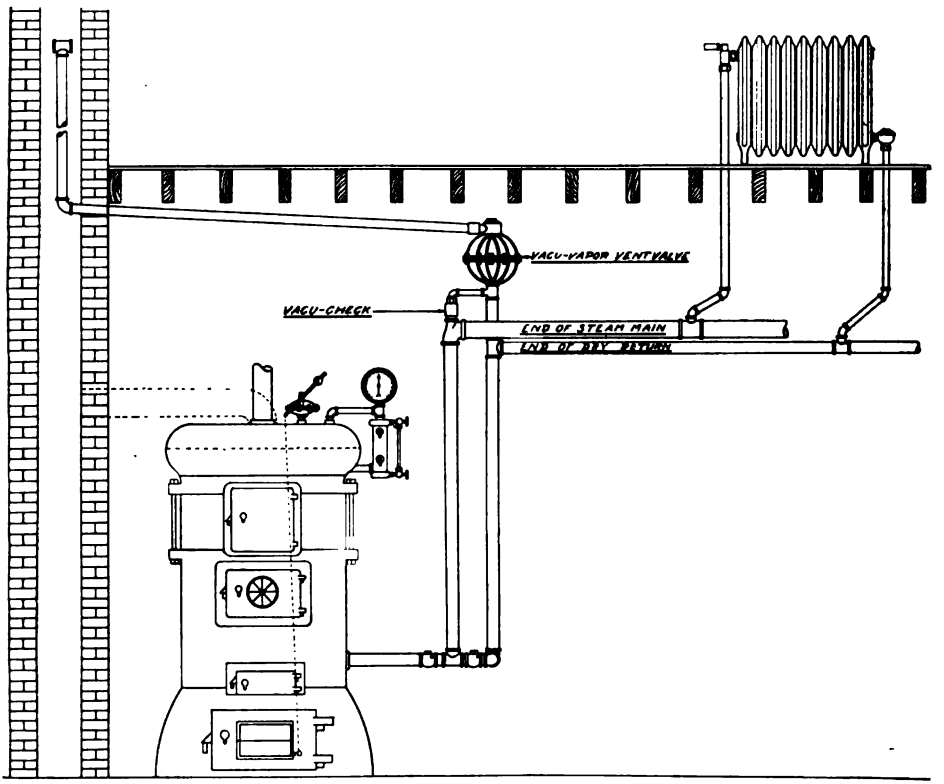

Fig. 22. The Reliable System.

chimney through a combined float and check valve that permits air to leave quickly from the return but seals against air inlet, and the returns enter the boiler through check valves. Packless valves are used. The automatic return valve is similar to Fig. 32.

The Mercury-seal Graduate system, Fig. 23, also has double control at the radiator. It has in addition the mercury seal from Fig. 18 and a thermostatic relief valve on the air line from

the receiver, thus permitting the air to leave but not reënter the system. The steam main drips to the return through a water seal. Packless valves are used. The automatic air and water relief valve, Type C, is used.

The Illinois Thermo-modulating system, Fig. 24, operates upon the mercury seal principle. All returns pass through thermo-valves at the radiators, and thence to the automatic return trap C, which delivers to the boiler. A float in trap C and

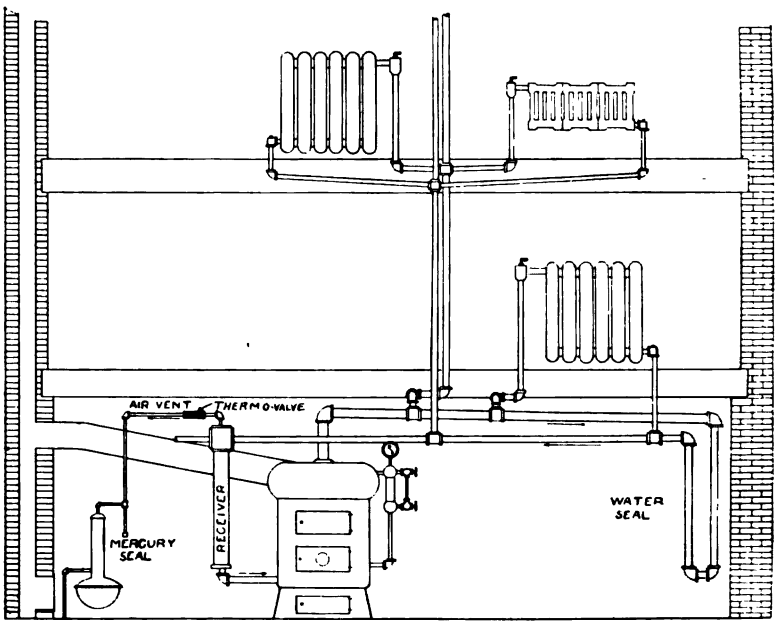

Fig. 23. Mercury Seal Graduate System.

a check in the atmospheric line permit the periodic admission of live steam to the trap to assist the delivery of the condensate to the boiler and equalize the pressures in the main and return. Trap C connects with the atmosphere through a mercury seal. The automatic return valve is shown in Fig. 33.

The Webster Modulation system, Fig. 25, has double control at the radiators and a special vent valve leading from the air separating tank to the atmosphere. The automatic return valve is shown in Fig. 29.

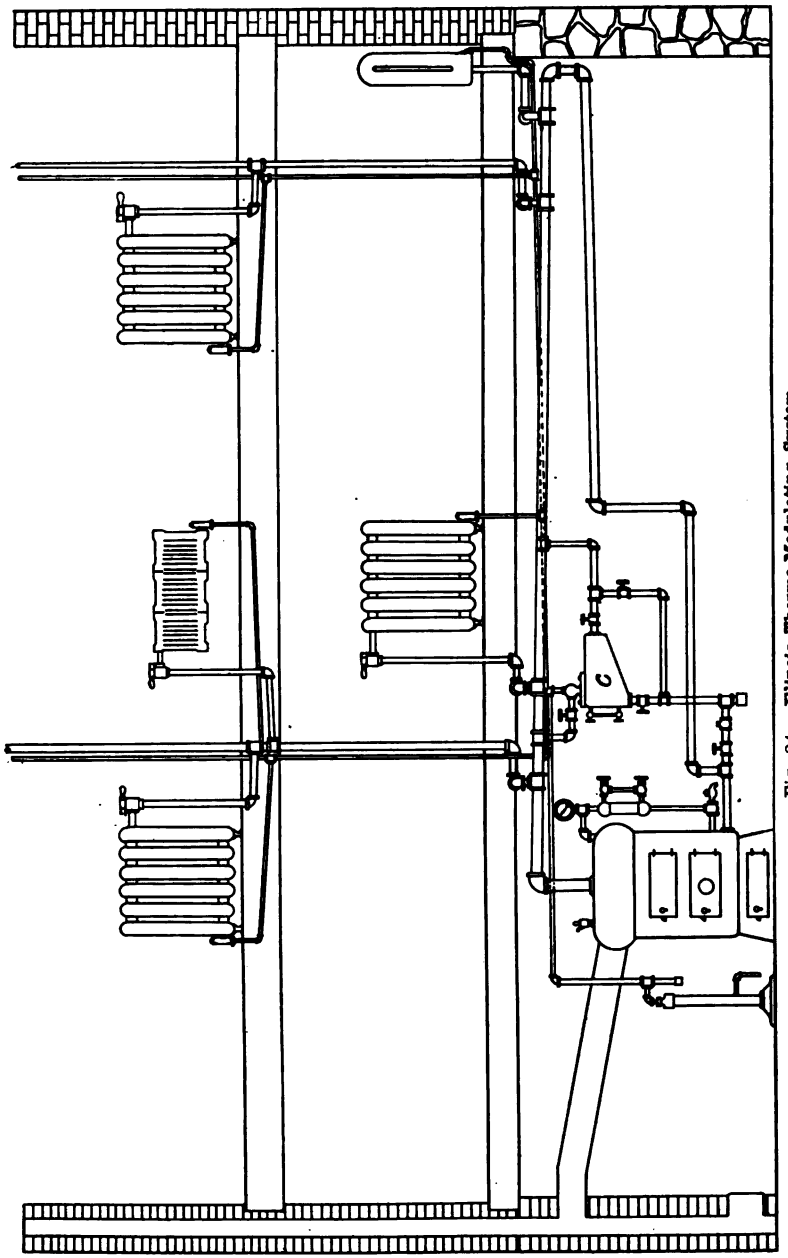

Fig. 24. Illinois Thermo-Modulating System.

SPECIAL FITTINGS.

The efficiency and satisfactory working of vacuum, vacuo-vapor or atmospheric heating systems are largely dependent upon the special fittings adapted to them. The circulation of steam or vapor to the radiators and the return of the water of condensation to the boilers follow well known physical laws relating to differential pressure and gravitation which, if properly understood and used, give satisfactory results, but if not

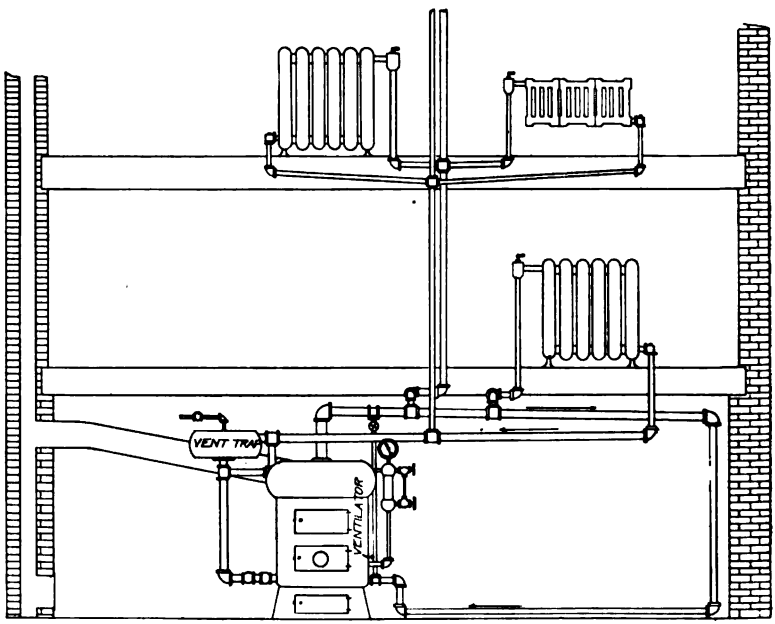

Fig. 25. Webster Modulation System.

so understood and used, fail. The problem ever before the heating engineer, therefore, is the study of the forces acting in such systems and the installation of fittings and apparatus intelligently adapted to these forces. A great amount of work has been done along the line of designing special fittings, with the result that a number have been developed and sold to the trade as integral parts of the various heating systems. The trade names of these fittings are distinctive of the company supplying the heating systems rather than of any feature of

design. Some of these trade names arranged as to the locations of the fittings on the systems are:

Supply Lines—supply valves, modulation valves and graduated valves.

Return Lines—radiator traps, thermo-traps, vacu-traps, sylphon traps, radifiers and water-seal motors.

Air Lines—vent valves, thermostatic valves, automatic expansion valves and vacustats.

Regardless of the trade names and the locations of the fittings on the systems, they may be classified under four heads:

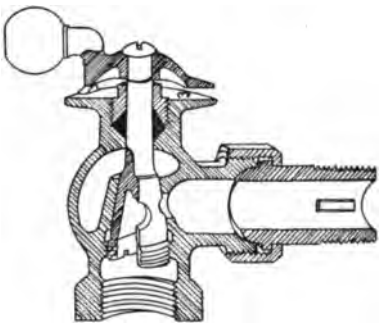

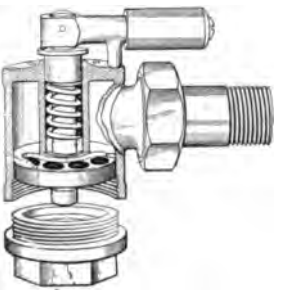

Fig. 26 (left). Modulation Valve, Webster System.
Fig. 27 (right). Quintuple Valve, Broomell System.

Type A. Supply valves—graduated to varying steam flow. Hand operated and adjustable.

Type B. Thermostatic valves—those opening and closing under the action of heat. Automatic and adjustable.

Type C. Float valves—those opening and closing under the action of the buoyancy of the water of condensation. Automatic.

Type D. Nozzles—those having a constant opening and leakage. Non-adjustable.

Supply Valves.

Type A:—Two valves, one having a taper cone seat and the other a disk seat, Figs. 26 and 27, are selected to represent this class. In all such valves the seats, whether cone, cylinder or disk, have openings of varying sizes to graduate the steam

volume to the radiation from a minimum to a maximum. They also have provision made to take up wear.

Thermostatic Valves.

Type B:—Figs. 28-33 show modifications of the thermal control valves. The first one is the composition expansion stem type, one of the earliest forms used on the mechanical vacuum systems, and still used on many installations with satisfaction. The other five have metal expansion chambers partially filled with liquids that vaporize at temperatures between that of the steam and the returning condensation. In most cases the tem-

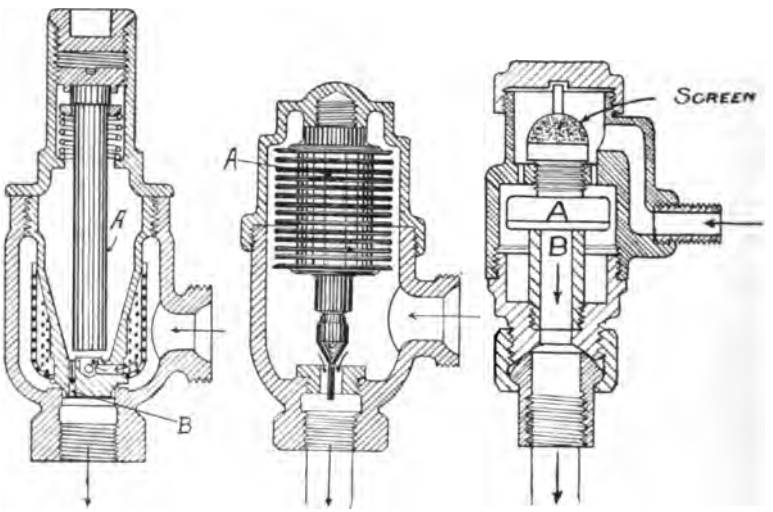

Fig. 28 (left). Thermostatic Valve, Webster System.
Fig. 29 (center). Sylphon Valve, Webster Modulation System.
Fig. 30 (right). "Vacustat" Valve, Reliable Air Line System.

perature approximates 200 degrees F. The change in the vapor pressure within the enclosed chamber causes an expansion or contraction of the sides of the chamber, thus closing or opening the valve. The principal differences in these valves are to be found in the construction and location of the expansion member, and in the style and location of the valve seat. Fig. 29 has a multiple, or bellows, expansion member in direct connection with the radiator. The rest have single expansion members, all in direct connection with the radiator excepting Fig. 33, the

thermal action of which is due largely to the temperature in the return line. The location of the thermal member within the radiator is conducive to a positive action and a high vacuum. Regarding the valve seats, three have flat surfaces and three have line contact. Five seats are horizontal and one is vertical. Style B valves are automatic, positive, noiseless, adjustable, may be used under either high or low differential pressures and on either air or condensation lines.

Float Valves.

Type C:—When the desired differential pressure between the radiator and the return is very small and a fitting is desired

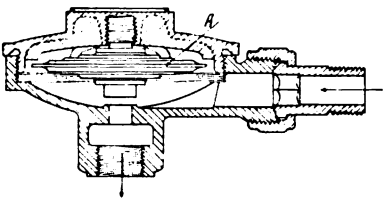

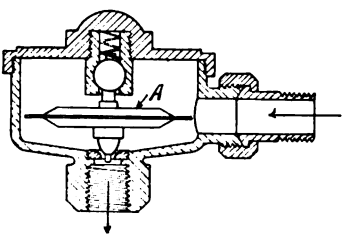

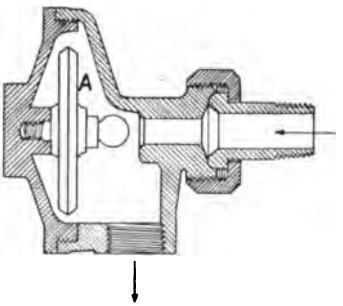

Fig. 31 (top). Dunham System.
Fig. 32 (left). Vacu-trap, Reliable System.
Fig. 33 (right). Illinois Modulation System.

that will serve merely as a separating trap to the radiator, a float valve is frequently used. Figs. 34-37 give four of the standard forms. There are five important features considered in the design of these float valves: continuous air removal, intermittent water removal, freedom from steam leakage, convenience in cleaning and freedom from noise. This is a combination that is difficult to obtain. The first three are points of efficiency and are not easily determined in the operation of

the average plant except under test. So far there are few comparative data from which to draw conclusions. The fourth affects the mechanical attendant who has charge of the repair

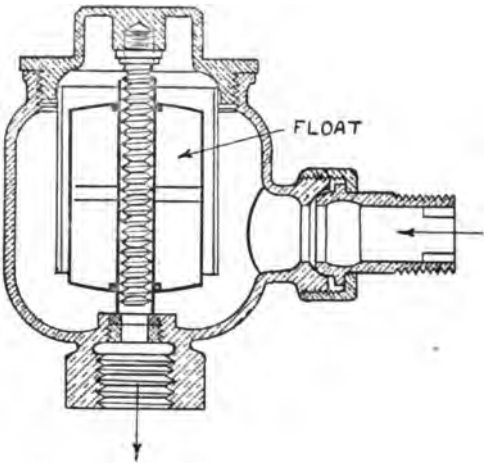

Fig. 34. Webster System.

and upkeep of the plant, and the fifth is of vital interest to the occupant of the room. One of the objections frequently offered against the use of float valves is the occasional noisy valve. When

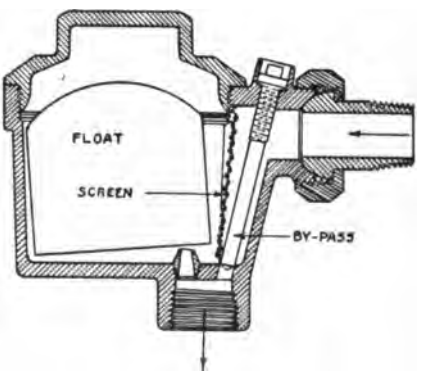

Fig. 35. Automatic Vacuum System.

the differential pressure between the radiator and the return is so small that it is alternately changing positive and negative, there is liable to be a chattering of the valve, which is very

annoying. This is not general but frequently obtains in one or more valves in a system.

Some systems have especially designed floats in connection with the receivers or separating tanks. These are very different

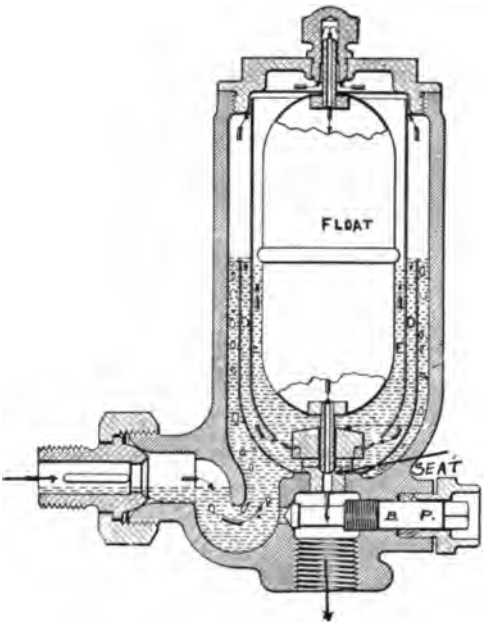

Fig. 36. Monash Noiseless System.

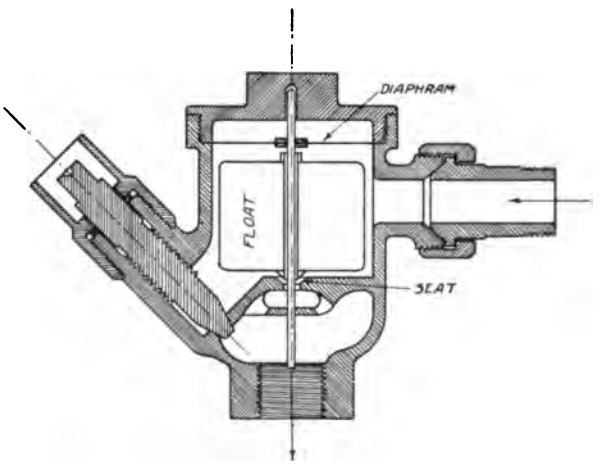

Fig. 37. Keystone Relief System.

in design from those just mentioned. A double float valve, shown in Fig. 38, is placed on the atmospheric vent to the separating tank in Fig. 19, and serves much the same purpose as a mercury seal. The upper float opens to air exhaust and closes against air entrance. The lower float prevents the escape of steam, if any collects in the tank, and closes by action of the inner float at a certain water level, to protect against loss of

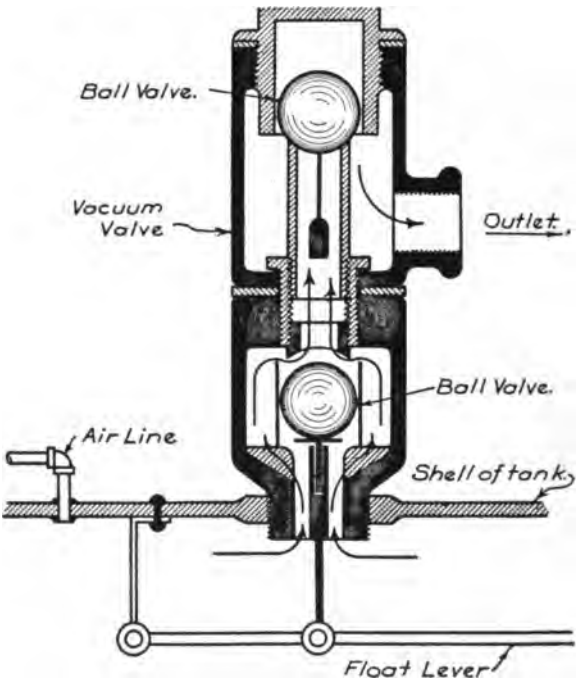

Fig. 38. Double Float Valve, Eddy System.

water if the separating tank becomes flooded. Fig. 39 serves as an automatic return and air separating trap in Fig. 24. When the condensate lifts float A sufficiently, B trips valve C, closes air line, opens port for steam entrance to trap and delivers condensate through check to boiler. When A reaches the low level, B reverses, cuts off steam, opens air line and completes the cycle. Fig. 40 is an atmospheric float check called a vacuvapor vent valve, located on the return line in Fig. 22. This

valve exhausts the air but seals against air entrance when working under a partial vacuum.

Nozzles.

Type D:—Fig. 41 shows a form of nozzle called a "retarder", which is used on the air lines from the radiators and on the by-pass from the main return riser to the separating tank in Fig. 19. This is non-adjustable and has a constant leakage to the separating tank.

Vacuum Producers:—One important line of apparatus that so far has not been discussed in connection with the heating system is the positive vacuum-producing outfit. Pumps (reciprocating and rotary, steam- and electric-driven), ejectors

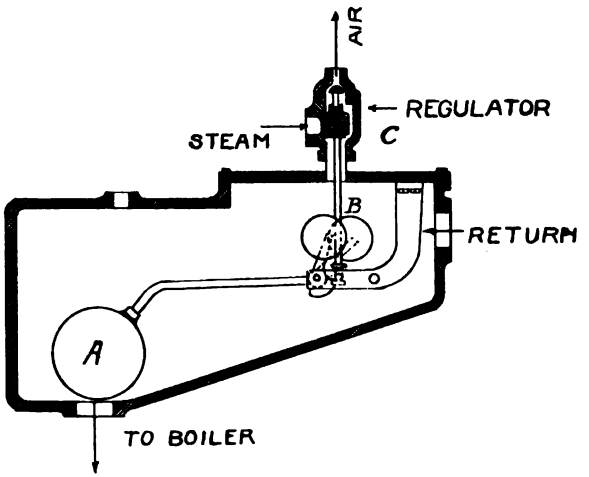

Fig. 39. Return Trap, Illinois Modulation System.

(steam-, air- or water-operated) and condensers are used. The pump is no doubt the best adapted to large plants and high vacuums. It also divides the field with the ejector and the condenser for the medium sized plants and for plants of moderate vacuum. On the other hand the pump is rejected in many places because of the personal attention required in its operation. If space would permit, a review of vacuum producing apparatus would be very interesting.

Concerning the economic improvement that follows vacuum or vapor heating, many claims are made, some of which may be

difficult to realize in practice. Estimates of saving range from 10 to 40 per cent. There is no doubt an increased economy due to the fact that the heat supply at the radiator may be graduated

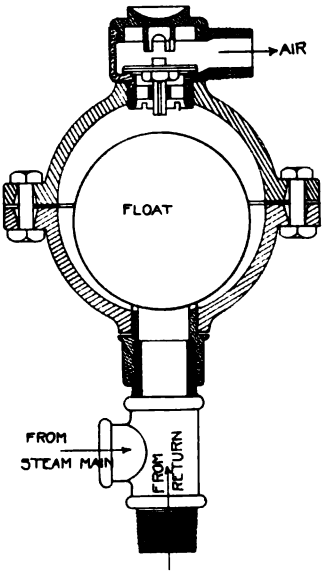

Fig. 40. Vacu-vapor Vent Valve, Reliable System.

to suit the heat requirement of the room and thus avoid wastage by the frequent opening of windows. It is evident, however, since the regulating device is principally controlled by the occupant of the room, that the economy of the system is largely in

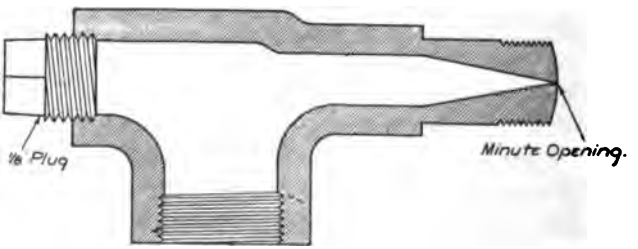

Fig. 41. "Retarder", Eddy System.

his hands. In discussing points of economy in vacuum heating, it is well to avoid extravagant statements without safeguarding the same with accurate details. As an illustration—the claim is

sometimes made that a mechanical vacuum system using exhaust steam as a heating medium may serve as a condenser to the engine, and improve the efficiency of the engine to a marked degree. As a matter of fact this statement will be justified very infrequently. The back pressure on the engine will seldom drop below atmosphere except when the vacuum return valves are given a constant leakage, in which case there may be greater loss in the plant from the latent heat of the wasted steam than gain derived from the increased mean effective pressure in the engine. The one large economy to be looked for in heating systems lies in the use of exhaust steam as the heating medium. When we consider the fact that exhaust steam at atmospheric pressure contains 85 to 90 per cent of the total heat of the live steam entering the cylinder, that this heat is all wasted when exhausted to the atmosphere, that the condensing engine saves only a small part of it and finally that the heating system may save it all, there is sufficient reason to look forward to many improvements along the line of combined power and heating plants.

In conclusion it may be said that the tendency in heating development as shown in Figs. 1 to 6 has been a reasonable one. High steam pressures are now used only in places where it is necessary to maintain a high temperature differential to reduce the heating surface to a minimum. Very low pressures (high vacuum) are used only to the extent of overcoming a necessary hydraulic head, except where the high vacuum is the result of air exclusion during condensation, in which case it is a point of economy. Pressures near or at atmosphere are being increasingly used. Systems carrying such pressures are simple in construction, safe in operation, and when accompanied by a positive vacuum, may use either live or exhaust steam. Vacuum systems, as a rule, have better circulation, require smaller pipes, create less noise in operation, and have better heat control than the standard gravity systems. They also eliminate the tolerated-but-much-disliked air valve. In a word, vacuum heating, with its many variations, may be considered a step in advance in the art of steam heating.

DISCUSSION

Mr. Snow.

Mr. W. G. Snow,‡ Mem. Am. Soc. M. E. (by letter), desired to make certain comments on the paper. Regarding the statement that exhaust steam is delivered to the heating system at a pressure of approximately five pounds gauge; this is at least four pounds in excess of the pressure within his experience, as with exhaust steam vacuum heating, it is very rare that over one pound back pressure is carried, and frequently the back pressure is less than one-half that. In case the power load is high in proportion to the heating load, a back pressure of several pounds involves a serious waste of fuel. Where a back pressure of five or six pounds, or more, is necessary with a plain heating system, it is often found possible to gain desired increased power from the engine by installing a vacuum system in connection with the heating, thus providing for the desired difference in pressure between supply and return lines by carrying a minus pressure in the return instead of carrying an excessive plus pressure in the supply line.

At a later point mention is made of the vacuum extending within the radiator. This is a decided advantage in the case of liquid thermostatic valves. Since these valves are always open except when subject to the full temperature of the steam, they offer a full, free opening to the interior of the radiator, thereby allowing the exhausting of the air in the radiators as well as in the return piping much more efficiently and quickly than when the mechanical or float valves are used, which have a fixed air-port opening. The port opening of liquid thermostatic valves varies greatly according to the temperature in which they are placed.

Mention is also made of spray water at the vacuum pump injected into the vacuum return. In case of high-grade liquid thermostatic valves and return lines uncovered, jet water is unnecessary when steam at only slightly more than atmospheric pressure is used in the system. The use of jet water is a serious matter in the case of a live-steam plant where no make-up water is required and where the jet water injected would necessitate blowing down the boilers from time to time, thus wasting a large amount of hot water.

At another point mention is made of the Webster Type "D" System; this is now known by the more descriptive title of Hy-Lo System, meaning that high vacuum is carried in the main vacuum return and low vacuum in the branch return beyond the vacuum controller.

One serious defect in any air-line system, such as that shown in Fig. 13, is that the water is not continuously removed from the radiator. A vacuum is maintained therein through the air valve, and in case it is desired to shut off the radiator and the valve does not happen to be tightly closed, the steam passing the valve will be condensed in the radiator and held there by the vacuum, with the result that when the steam is again turned on, water hammer will occur.

At a later point mention is made of the condenser above the boiler. This condenser is intended to take care of the vapors coming from the returns, but the heat resulting from this condensation of vapors is com-

‡ Manager, Warren Webster & Co., of Camden, N. J.

monly wasted, the coil or indirect heater being simply suspended on the basement ceiling and performing no useful function other than condensing these vapors. With any vapor system, the radiation is commonly considerably greater than with ordinary, steam-heating systems, or with vacuum or fractional valve systems having a positive trap at the return end of each radiator or coil. With the latter, the steam pressure can be increased slightly to meet severe outside weather conditions and the saving in the amount of radiation is a desirable feature both on account of lack of space and from the saving thereby secured. Mr. Snow.

High steam pressure for heating has been found uneconomical. It has been found by investigators that the fuel cost for heating a given space by low-pressure steam is far less than when steam at a relatively high pressure is used. It has been pointed out by these investigators, that when high-pressure steam is used, it tends to keep the air near the top of the room at a much higher temperature than when a lower heating medium is adopted. Whatever leakage there is is more costly, since the air escaping at the lee side of the building, with high-pressure steam heating, escapes at a higher temperature than when low-pressure steam is used, and therefore carries away more heat with it.

A lengthy argument or statement is hardy necessary to show that low-pressure steam is far superior for many reasons to high pressure for heating purposes, and when low pressure is combined with the fractional valve system with traps or with the vacuum system, the heating conditions are practically ideal.

Mr. A. A. Coddington (by letter) expressed the view that while the author of the paper had given a very systematic and graphic description of the mechanical specialties and the cycle of operations of the various types of vacuum, vapor and atmospheric heating systems, he had passed over with but scant notice the operation of these various systems in actual practice and had said little or nothing of the limitations and shortcomings of some of these systems. To the mind of the writer, the most important question for the heating engineer is, What type of heating system will be best adapted to the particular requirement of the work in hand? He felt further that the old reliable one-pipe gravity-return system possesses sufficient merit to warrant its use in many of the heating problems of today. Also, that an impartial discussion of the vacuum and vapor-heating systems requires a consideration of their faults as well as of their virtues. Mr. Coddington.

Some of the inherent weaknesses which render the vapor and vacuum systems unfit for certain classes of installation are as follows:

(1) Complicated or delicate mechanical parts which require attention and adjustment and will not stand the abuse given them by an unskilled laborer. Of course, where the system is of sufficient size to require a competent engineer, this difficulty disappears.

(2) Excessive corrosion in the return mains in cases where the steam is made entirely from raw water. This may at first sight appear to be an exceptional case. In reality, however, it is a very common occurrence; for

Mr. Coddington.

when boilers are located at a distance, the return of the condensed steam is often impracticable and the boilers are fed with raw water and the condensed steam discharged to the sewer. Steam made in this manner usually contains a large amount of air. The air seems to cause but little trouble in the steam mains, but in the return mains it attacks the pipe, causing serious corrosion. With steam of this character the one-pipe gravity-return system would separate the air from the steam in the radiator and discharge the air into the room through the air valve. A vacuum or vapor system, under the same conditions, would prove very unsatisfactory on account of the rusting out of the return lines. It may be surprising, as a matter of fact, to know that for the past two years a certain office building in this city (San Francisco) has required an expenditure of $500 per month regularly for repairing and replacing the return lines of a vacuum system which is now less than eight years old. This amount is more than the total monthly fuel cost for the heating system. The lack of economy of a vacuum system under such conditions is obvious.

It might be suggested that this difficulty could be overcome by treating the feed-water. This is often impossible, for in many cases the steam is sold by an outside party to the owner of the heating system, so that the heating engineer has no authority to change or improve the character of the steam.

A further objection to the use of vapor or vacuum systems is the additional cost of installation. In order to compete with one-pipe system in price, the vapor or vacuum companies are frequently tempted to recommend pipe sizes which are inadequate for the service required.

The general advantages for the vacuum vapor and atmospheric systems over the gravity system are: Greater fuel economy, fractional control of the heat, less noise in the pipes and a total elimination of the spitting air valve. These are all good talking points, but in the test of actual service it is frequently found that the vacuum and vapor systems do not give as much genuine satisfaction nor as high actual economy as the one-pipe gravity system.

Mr. Morrin.

Mr. Thos. Morrin* (by letter) called attention to the list of methods for circulating steam for heating purposes and to the apparent relative merit as indicated by the order in which they are placed in the list. The decided preference of the author of the paper seems to be for the vacuum air and water return systems, where the steam supply is furnished by the exhaust from power units, with the idea that the system will operate at or below atmospheric pressure, and thereby save fuel by lessening the back pressure on the steam units.

Assuming for example a 150-hp. plant using 40 pounds of steam per horsepower (= 6000 pounds of steam) per hour, and allowing 25% for loss in piping, mains, etc., this would allow, say, 15,000 square feet of direct radiation, where the condensation would be 3/10 pound per square foot per hour.

In a system of distribution having a vacuum return for air and water,

* Consulting Mechanical Engineer, San Francisco, Calif.

Mr. Morrin.

with the usual scale of pipe sizes for steam and return as recommended for the respective systems, we will have, say, 425 units of radiation and 40 risers, with 5 drip points in the mains, giving a total of 470 units, either thermostatic or mechanical, as the case may be; say, 7,000 feet of pipe in each side of the system, and the steam supply system of piping of such size that the most remote radiation in an ordinary office structure will receive a maximum supply of steam at zero gage pressure; 5 inches of vacuum at the pump in the return system; the whole return system (the utmost care being given to alignment) uncovered; and a cold water jet at the strainer in the suction of the vacuum pump discharging into a separator, hot well, or feed-water heater, as the case may be. In comparison with this we may consider a properly proportioned and installed one-pipe system, gravity return, with supply and return all insulated and no automatic valves on risers or drips, but in every other respect the same, except that the operating steam pressure will be from one-half pound to one pound gage.

In the vacuum or vapor system the heat losses from radiation from naked piping, and the heat and water loss by using a cold-water jet at vacuum pumps, often fully represent one-half the feed-water volume. This is entirely eliminated in the one-pipe system, as all the water of condensation is returned with very little heat loss, no condensing jet is required, and no raw water, with its usual charge of air and oxygen content to be released in the system and destroy the piping.

As to the first cost for a plant of this size, there is some considerable difference in favor of the one-pipe system.

As to the operating cost, there is from ten to twenty-five percent difference in favor of the one-pipe system, when installed with the care and judgment that Professor Hoffman asks for the vacuum systems.

As to back pressure in heating mains receiving the exhaust from steam-driven units, it has been the universal experience of the writer that it is an exception to find a steam cylinder on modern pumps or engines which does not have from one-half to one pound inherent back pressure above the atmosphere, due to the friction of the steam passing through the exhaust ports of the cylinders.

A heating system operated at atmospheric pressure, receiving steam from a cylinder with a back pressure as above, would not materially alter the efficiency of the plant under these conditions and, consequently, would not add one iota to the efficiency of the heating system. On the other hand, a vacuum carried below the negative pressure specified, particularly where mechanical valves are used, means a loss of heat in the radiators due to the low pressure carried in the return system. On the whole, the writer felt that the various vacuum systems are maintained at the present time largely as a result of the commercial exertion expended in advocating them, rather than from any real economy to be derived from their adoption and use. He further expressed the opinion, if the engineers of the country would pay less attention to the commercial talking points put forward in advocating the adoption of these systems and more attention to the actual efficiencies

Mr. Morrin.

that may be secured by properly arranged gravity systems, that a much higher efficiency and saving to owners would result from their efforts.

He pointed out, further, that the author of the paper does not go into the operating side of the question sufficiently to be instructive regarding one of the most essential points relating to steam heating, and that is the quality of steam necessary for vacuum or vapor systems when used with street service of central-station steam, or exhaust steam from power plants using feed-water, at low temperatures, charged with atmospheric air and the ever dangerous and vicious oxygen content which is released in the return side of the system. On the other hand, the one-pipe system with automatic air valves on the radiators releases the air at the radiator, and thus eliminates the air from the system before it does any harm to the piping.

It is true that the two-pipe system has the advantage where the steam and air carry an offensive odor, but this trouble seldom, if ever, occurs in an isolated system.

The writer further considered that hot-water heating has many merits over steam for heating purposes which cannot be realized with steam by any system of piping for steam distribution which he had seen in his practice of over thirty years as a designing engineer.

He had used nearly all the modern types and called to mind one plant of 10,000 square feet of direct hot-water radiation where the water is heated by steam and the boiler and hot-water generator are over 500 feet from the center of distribution. The circulation is by a steam-driven pump using the exhaust steam in the water heater; the flow and return mains are six-inch; and the difference between flow and return less than 20° Fah. The consumption of fuel in this system is 15° less than in the best steam vacuum system he had ever known.

In another hot-water system which he had designed, with fire-tube water-heating boilers and motor-driven circulating pumps, 26,000 square feet of direct radiation in 16 buildings is distributed over an area of 50 acres, with 8-inch mains and a 6-inch centrifugal circulating pump. In this system the heat radiated from the radiators is somewhat over 50% of the actual heat value of the fuel.

Paper No. 237

DEVELOPMENT AND PROGRESS IN "SCIENTIFIC MANAGEMENT" DURING RECENT YEARS.

By

E. P. LESLEY, M. M. E., Mem. Am. Soc. M. E.
Assoc. Prof. Mech. Engrg., Leland Stanford, Jr., University
Stanford University, Calif., U. S. A.

The purpose of this paper is to present briefly a statement of what appear to be the more important developments and indications of progress in Scientific Management during the past ten years. Neither a defense nor adverse criticism is intended. Such comments as are contained in the paper are the result of a consideration of what, so far as the writer is able to discover, are statements of fact.

At the outset it is well to define the term; it has been loosely used. To various people it means various things:—high-speed steel, some method of wage payment, a loose-leaf system of accounting, time study, or what not. Here a difficulty arises—no brief definition of Scientific Management appears adequate. We may call it the "Taylor" system, and to some this would doubtless convey the right idea, but to others our meaning would be quite as vague as with no definition at all. However, when using the term, the writer refers to that type of management for which Mr. Frederick W. Taylor first formulated definite principles. It would perhaps be known only as "the Taylor system" were it not that Mr. Taylor himself preferred the less personal designation.

Mr. Taylor died very suddenly on March 21, 1915. He was a remarkable man. He possessed great ability, and made the most possible of his talents. His very prominent personal quality was what may be called stick-to-it-iveness. He recognized in himself more than average power, as he expressed it, "to hang on with his teeth". At the same time his was a

most kindly and generous disposition. He gave freely of time and money to further what he sincerely believed would eventually bring freedom from industrial strife. The writer can not add to the appreciation voiced at Mr. Taylor's funeral in Philadelphia, but he can not let this occasion go by without an expression of the deep gratitude he feels for having known such a man and for having counted him as a friend, even for a short time.

The principles of what was later called Scientific Management were set forth in a paper entitled "Shop Management". This paper was presented to the American Society of Mechanical Engineers in 1903.

The principles of the system as formulated were:

1. A large daily task.
2. Standard conditions.
3. High pay for success.
4. Loss in case of failure.

A book entitled "The Principles of Scientific Management" appeared in 1911. This work, while largely embodying the ideas of "Shop Management", was somewhat less technical in form and stated that Scientific Management involved the following characteristics.

In this system the administrating body undertakes to gather all of the available information concerning the work in hand, to conduct scientific investigation as to the best methods for doing this work, to reduce the results of investigation to mathematical formulae, and to determine what is a desirable and attainable performance for a man or a machine under conditions shown by the investigation to be those for maximum efficiency. It selects with scientific method a workman suited to a given task, provides for each workman each day a definite day's work, furnishes him with most efficient tools and equipment, and issues instructions which if followed assure the accomplishment of his task. It establishes conditions and wages that secure the earnest endeavor and co-operation of the workman.

As far as any system of management adheres to these ideas, it may be called scientific. The sciences of Physics,

Chemistry, Psychology, and Biology are involved. Physics and chemistry in determining methods and processes, and psychology and biology in the selection of the workman and determining the wage that will secure his highest endeavor.

Management is scientific proportionally to the degree in which scientific investigation is carried on and the results of this investigation are applied. The degree to which an investigation may be carried in a new field is illustrated by the work of Mr. Taylor and his associates in the study of the art of cutting metals. In a paper on this subject, presented to the American Society of Mechanical Engineers, in 1906, the author says, "the experiments described were undertaken to obtain a part of the information necessary to establish in a machine shop our system of management". The experiments cost between $150,000 and $200,000 and extended over a period of 26 years. It is of course unnecessary for any concern to repeat this particular investigation, since the results of it are available. It is not to be presumed, however, that further investigation may not be profitable. High-speed steel is not necessarily the best material of which to make a metal-cutting tool. Indeed there has been recently discovered a new material which, apparently, possesses qualities that make it in some instances as superior to high-speed steel as the latter is to the now old-fashioned carbon steel. Trials of lathe tools made of the new material show that it will hold a good cutting edge at speeds, in some cases, nearly double those suitable for high-speed steel.

Progress and development in Scientific Management during the last decade are shown by:—

1. Application of the system to an increasing number of old and new industries, both in this country and abroad.
2. A general wide-spread popular interest.
3. Attitude of organized labor.
4. Governmental action.
5. Establishment of the subject in the curricula of colleges and universities.
6. Improvements in devices and methods.
7. Formation of societies whose aim is the promotion of Scientific Management.

8. A now well-developed literature of the subject.

9. The division of managers into two groups; one of enthusiastic supporters, the other of strong antagonists.

APPLICATION OF THE SYSTEM.

When Mr. Taylor read his paper on Shop Management in 1903 it aroused a very considerable interest, but there was no immediate wide-spread response. It was realized that the system he described might have useful features but it appeared to many that the central idea was some method of pay, bonus, premium, or differential piece-rate. There had been some use of premium and bonus systems and further installations followed. Such work as was found apparently suited to these schemes of payment was largely repetitive, work for which there was at least something available in the form of records of past performance; work that was comparatively simple in the nature of its operations.

To Mr. Taylor's paper on "The Art of Cutting Metals" there was an immediate response. The Iron Trade Review in commenting upon the paper said that it was the most important contribution ever made to engineering literature. However true this may be, it seems that the engineering profession largely failed to grasp its true significance. What may be termed the husk or shell was readily seen and in some measure was taken advantage of. High-speed steel and better forms for roughing tools became generally used. Considerably higher cutting speeds, in such machine tools as it was possible to use them, were rapidly adopted. On the part of the usual management, however, there was a conspicuous lack of attention to such details as the provision of properly hardened and ground tools, belting of sufficient strength or proper tension to drive machinery at the cutting speeds of which the tools were capable, or instructions and superintendence which would insure that machinery was kept busy at its maximum economic capacity. The shell of the work was seen only, despite the fact that it was but an incident in the solution of a greater problem.

The real problem was to determine the way to obtain a maximum output from a given man or a machine. The solution involved the observation of various operations, timing these

operations with a stop watch, changing conditions and appliances, making other observations, an analytical study of results, a determination of the best conditions, appliances, and times and best sequence of operations. It involved the selection of a workman suited to his job. Suited to his job meant that while the task should be within the capacity of the workman, it should at the same time be the highest type of work of which he was capable. It should require from him an exertion of his best effort (mental and physical), and at the same time work no injury to him. The solution involved bringing the man and the job together and the provision of a means for holding them there.

It was determined that in the majority of industrial enterprises men and machines were potentially idle more than half of their regular working time. It was found that operations were too slow and many motions useless; that if standard operations were performed in standard time by standard men and equipment, an efficiency of production seemingly impossible would be the result. It was learned that these standards can be determined only by careful study which brings to its aid any scientific method and apparatus that are available.

Shop managers were not slow to take some of the very apparent advantages of high-speed steel, and some used with considerable profit a part of the devices of Scientific Management. Before 1911, the system was developed and working well in many industries. It was said that there were about 50,000 men working under Scientific Management that year. The majority report of the Sub-Committee on Administration of the American Society of Mechanical Engineers for 1912 enumerates 52 industries "in which some form of labor-saving management has been installed". "Labor-saving management" is stated, in the report, to better convey the meaning intended than "Scientific Management", which has been generally and loosely applied to the new system and methods". The variety of application is illustrated by the following: machinery building, mining, lumbering, building construction, clothing manufacture, printing and lithographing.

Since the report referred to, Scientific Management has been developed in industries not mentioned and the area of the fields of application has been increased. The growth of

Labor-saving management has not been as rapid as that of Labor-saving machinery. It has been steady, however, and that it is necessarily slow is perhaps fortunate, since thereby more time is given for readjustments, and there is less danger of even momentary unemployment through freeing labor to other service. Scientific Management has been applied to the direction of municipal public works with signal success. Inability to use the principle of "high pay for success", because rates of pay were prescribed by law, has not prevented a very considerable gain from the application of the principle of "standard conditions". Rating according to merit, upon which rating recommendation for promotion was based, was found to be an incentive to more than usual endeavor.

Before 1911 the development of Scientific Management did not attract general public attention. It is known that the Taylor group of engineers were well supplied with work. So far as the writer has been able to learn, there was neither formal association of this group with Mr. Taylor nor did he in more than a very general and friendly way advise and direct the members of it. They were engineers who were associated with him in his early investigations or who had gained his confidence in their ability to promote Scientific Management. They were loyal to him and accepted his advice and counsel. There were installations of Scientific Management, at least in part, by men who had little or no association with its chief exponent.

If one lives east of the Mississippi River, it is not difficult to observe Scientific Management in the process of installation and in some degree of operation that is at least beyond the early stages. Such a thing as a complete, finished, and perfect installation is not to be found. There seems to be always an opportunity for improvement and further extension of the system. That this should be so one can readily see. The management undertakes to gather all of the information bearing upon the work in hand, to conduct scientific experiments and reduce information and results of experiments to mathematical formulae. There can be no end to such a program.

In answer to the question, How long will it take to install it all? Mr. Frank B. Gilbreth in his "Primer of Scientific Management" says, "It can never be 'all' installed because there

is no end to it". In some cases scientific investigation and systematic collection of information have been for the most part discontinued, doubtless because it appeared that they would be unprofitable at the time.

The writer visited the shops of the Tabor Manufacturing Co. and the Link Belt Co. in Philadelphia, late in the year 1913. Every opportunity was afforded for a complete inspection of both plants; there seemed to be no secrets anywhere. In answer to a question as to the wisdom of so open a shop, Mr. James M. Dodge of the Link Belt Co. replied to this effect, "suppose you were the manager of a competing firm, suppose you were able to see and take in all that is here, you could not do anything with it. You would need beside our information and methods, our men. These you cannot get from us unless you pay them more. You can not afford to do that because if yours is traditional management, their output with you will not approach what it is here. If you have Scientific Management you will not want our information, our methods, or our men. You will have your own and we will be on even footing".

While employed at the Tabor Manufacturing Co., the writer learned that there is no such thing as a complete and finished installation of Scientific Management. Compared to other enterprises in the vicinity, the Tabor Co. has a small plant. Normally about 75 men are employed at direct labor, mainly machine work and assembling. The principal product is moulding machines. About half of the work turned out is standard and half is built to special designs. On occasion orders are taken for machinery and apparatus not in the regular line.

It would seem that in this plant, if anywhere, the system would be complete, since smallness would permit a very close attention to detail. But, as stated, it was here it became evident that because of its principles, Scientific Management can not be complete.

The Tabor Manufacturing Co., after ten years' experience under Scientific Management, is still doing time study, still classifying information, developing plans for route diagrams, and studying processes with a view to improvement. No specific discussion of the activity of the Tabor Manufacturing Co., in this or other directions, is properly contained in this paper.

The general lines of investigation may be indicated. Time studies, it appears, may go further than those necessary or desirable for the purpose of economic manufacture. If we are building machines to sell, it would be well for our salesmen to have in hand accurate and reliable information as to what may be accomplished with our machines by an operator to whom such work is suited. If we make a time study to secure this information, it may appear that change in the design would result in an elimination of fatigue or of waste motion for the operator. We would at least learn the best method of operation. This would help us to make sales.

It seems desirable that the sales management should have accurate, detailed information as to the personal peculiarities, responsibility, and desires of customers, and not that these should be the stock in trade of the salesman solely. It appears that salesmen should be provided with definite instructions as to the best-known method of presenting themselves and their wares, that they, as well as goods in process of manufacture, should be routed. There should be a best way to make a sale, as much improvement possible in the art of selling as there was in the art of cutting metals.

It appears possible to classify the subject matter of business correspondence, to assign symbols to the classes and further symbols to details. One familiar with such a classification can indicate the precise nature and contents of a reply to a business letter with a few strokes of a lead pencil. Such a reply has all of the advantages of one that is dictated. It has the advantage of a form letter, in that it saves time.

Not only has Scientific Management grown externally in the past decade, as shown by its application to an increasing variety and number of industries, but there has been also an equal internal growth. Where the principles seem to have been realized to the greatest degree, it is recognized that only a beginning has been made—that the field is without limit.

POPULAR INTEREST.

In 1910 the railroads of the northeast section of the United States filed new tariffs with the Interstate Commerce Commission. The new tariffs provided for large advances in freight

rates. It was alleged that the advances were necessitated by increased cost of operation and improvements. The Commission ordered a public investigation to determine if the proposed rates were reasonable and just. Mr. Lewis D. Brandeis, of Boston, counsel for the Traffic Committee of the Trade Organizations of the Atlantic Seaboard, opposed the increased rates mainly on the ground that if Scientific Management were introduced in railroad operation, the resultant saving would be such that the old rates would furnish a large profit. One witness stated that if Scientific Management were introduced on all American railroads the saving would be at least a million dollars a day.

In January, 1911, Mr. Brandeis submitted to the Commission a brief in which he discussed and reviewed the evidence that had been presented. About half of this brief related to the subject of Scientific Management.

The statement that American railroads could save 300 odd million dollars a year was sufficiently startling to arouse a widespread general interest in the method that would make such saving possible. The immediate publication of many articles served to keep this interest alive.

Discussions of every possible phase of the subject appeared in both technical and popular journals. Titles such as "Saving $1,000,000 a day for American Consumers", "Impractical Theories", "The Dream of Scientific Management on Railroads", "The Mistakes of the Efficiency Men", "The Bonus System on the Sante Fe", "What is Scientific Management?" indicate the interest aroused and controversy engendered.

Despite the decision of the Commission that it could "hardly find that these methods could be introduced into railroad operations", the already hostile public was quite willing to believe that railroad management was hopelessly inefficient. It read with interest descriptions of the methods and mechanism of a new type of management that would, it appeared, eventually reduce the cost of living, since it was said to increase wages and decrease cost of production in every industry to which it was applied. Other developments, to which reference is made later, have further increased and stimulated the general public interest in Scientific Management.

ATTITUDE OF ORGANIZED LABOR.

The writer asked a number of workmen in establishments operating under Scientific Management how they liked the system. From only one was there any objection. An apprentice stated that he had not been treated fairly in a matter of rate setting, that it worked both ways, however, as he later did not work at best speed and so got even. From the remainder there was nothing but approval. Each appeared to be happy with the assurance of continued congenial employment at more than usual wages. A part of these men were members of labor unions.

Other workmen, both union and non-union, have expressed fear of Scientific Management. A reason is not far to seek. The system is said to triple production. Labor fears that increased production means decreased employment. That such may be the immediate result if the increase is sudden can not be denied. An advertisement of a spot-welder states that this machine and one man did the work of eight expert riveters, that seven men at $2.50 per day dropped from the pay roll soon paid for the machine. This statement may have a most pleasant sound to the manager who is intent on reducing costs, but not to the expert riveter. An industrial engineer told the writer of an office where, by the introduction of Scientific Management and some labor-saving devices, the working force was reduced from thirty to two. The management was greatly pleased. It is not to be presumed that the twenty-eight who were dropped out were particularly enthusiastic.

However friendly the attitude of the initiated individual workman, organized labor is avowedly antagonistic to Scientific Management. Mr. Taylor believed that the rank and file of union men are not opposed to it; "they are opposed merely", he said to the writer, "to what they have been led to believe is Scientific Management. The leaders are opposed to it, because if it were to spread considerably their jobs would be gone. There would be no occasion for the union as now organized".

A few months after Mr. Brandeis submitted his brief, the union machinists and moulders at the Watertown Arsenal walked out. Scientific Management was being developed there at that time.

The striking men were taken back, but they petitioned the Labor Committee of Congress to investigate the subject of Scientific Management and to recommend such legislation as would protect the interest of the workman.

That union leaders are against Scientific Management is shown by the circular letter issued by the President of the International Association of Machinists, in 1911. Extracts from this circular follow. It is of the same tone and character throughout.

"The latest danger . . . . is the so-called Taylor system of shop management. Mr. Taylor . . . . is well qualified by disposition and education to undertake to undermine our trade. . . . . Wherever this system has been tried it has resulted in either labor trouble and failure to install the system, or it has destroyed the labor organization and reduced men to virtual slavery and low wages, and has engendered such an air of suspicion among the men that each man regards every other as a possible traitor and spy. . .

"The installation of the Taylor system throughout the country means one of two things, i. e., either the machinists will succeed in destroying the usefulness of this system through resistance, or it will mean the wiping out of our trade and organization, with the accompanying low wages, life-destroying hard work, long hours, and intolerable conditions generally. . .

"Instruct the secretary or a committee to write immediately to the Secretary of War, to two United States Senators of your State, and the Congressmen from your district, protesting against the installation of the Taylor system by the Government, asking the law-makers to support any measure that may be submitted to Congress which will secure this result.

"It would be well to enumerate some of the objections to this system as outlined in this letter".

One effect of this letter was the circulation of petitions to the Secretary of War "to abolish the stop-watch system" and "discontinue the Taylor system" in the Watertown Arsenal. Reasons for these requests were set forth in two petitions bearing dates of June 21, 1913, and June 17, 1913, which were forwarded to the Secretary of War. The petitions were referred

to the office of the Chief of Ordnance and were accompanied by certain complaints of the petitions from Appendix 1 to the Report of the Chief of Ordnance for the year 1913.

The statements of the petitions are shown to have, in the main, no foundation in fact. Such complaints as appear to be of actual conditions are clear indications that the premium system was not being adopted rapidly enough. Workmen were disgruntled simply because their fellows were given an opportunity to earn more than usual wages, which opportunity, through force of circumstances, was for the time denied them. Despite the statement of one of the petitions that the signers subscribed their names of their own free will and accord, investigation showed that many were compelled to sign and others did not know what they were signing, the signatures being obtained without showing the subject matter. The report of the Chief of Ordnance states that as soon as it became known that employees were being interviewed, a telegram charging intimidation was sent to a local Member of Congress, and closes with the suggestion that "Since danger lies in Congressional action, under pressure from outside the arsenal, in order to satisfy Congress and the country at large as to the advantage or disadvantage both to the Government and its employees of the features of the system as complained of, an investigation should be made by an authoritative body in which the country could have confidence." The whole subject is considered a fit one for investigation by the Industrial Commission appointed by the President pursuant to the act approved August 23, 1912, entitled "An act to create a commission on Industrial Relations".

GOVERNMENT ACTION.

In response to the petitions from employees of the Watertown Arsenal to the Labor Committee of Congress to investigate and recommend legislation, a committee of three was appointed consisting of Mr. William B. Wilson, now Secretary of Labor, Mr. William C. Redfield, now Secretary of Commerce, and Mr. John Q. Tilson. To this committee was assigned the investigation of "the Taylor and other systems of management" in government shops. The committee confined itself mainly to the Taylor system. It held hearings at various places

and took testimony, practically wherever available, of workmen, foremen, gang bosses, rate setters, and route clerks, who had worked under the system; of managers who had watched its installation and development and directed its operation afterwards; and of practically all of the industrial engineers who were unofficially known as the Taylor group. The hearings before this committee were published in 1912. The report was brief and stated that no legislation was necessary.

This investigation further developed and intensified public interest. Editorials and other writings bearing titles such as "A National Hearing for Scientific Management", "Slave Driving or Scientific Management", "The Relation of Scientific Management to Organized Labor", "The Taylor System as a Machinist Sees It", appeared. Mr. Taylor's contributions to the literature were translated and published extensively in foreign languages.

Individual legislators have not concurred in the report of the special committee, however. Two bills directed toward the discontinuance of Scientific Management on Government work have been introduced in the United States Senate. The first appeared in the 62nd Congress in 1912 and was intended to prohibit time study and the payment of premiums or bonus on Government work. It was reported favorably by the Committee on Education and Labor, but did not reach the next order of business.

The second bill was introduced in 1914. The writer can find no record of its having been reported by the Committee on Education and Labor, to whom it was referred. This bill provided that it should be unlawful to make a time study of the movements of an employee of the Government with a stopwatch or any other time-measuring device, that it should be unlawful to use the results or records obtained in such a manner, and that it should be unlawful to pay a bonus or premium as wages.

The Army, Navy and Post Office appropriation bills of this year, 1915, carried the following astonishing amendment:

Provided that no part of the appropriations made in this bill shall be available for the salary or pay of any officer, manager, superintendent, foreman or other person having charge

of the work of any employee of the U. S. Govt., while making or causing to be made with a stop-watch or other time-measuring device, a time study of any job of any such employee, between the starting and completion thereof, or the movements of any such employee while engaged in such work; nor shall any part of the appropriations made in this bill be available to pay any premiums or bonus or cash reward to any employee in addition to his regular wages, except for suggestions resulting in improvements or economy in the operation of any Government plant; and no claim for services performed by any person while violating this proviso shall be allowed.

After a very considerable debate, the Army and Navy appropriation bills were passed as amended. A joint resolution in which the amendment did not enter was substituted for the Post Office bill. The principal effect of the amendment has been to discontinue the payment of premiums and bonus in the Navy yards. A part of the work done at the arsenals is paid for out of the appropriation for fortifications, the bill for which carried no provision prohibiting payment of premiums and bonus. Other work was of the kind for which piece prices could be established that were equivalent to paying premiums. It has been held that the provision of the amendments prohibiting time study cannot be complied with, since strict adherence would prevent even ordinary time-keeping.

Thus while high pay in the form of premium and bonus has been taken from some Government workmen, the superintending force is left free to devise other incentives, having in hand much time-study data and experience as to what workmen can accomplish.

The Commission on Industrial Relations made a first annual report in 1914, and a final report was issued in August, 1915.

The final report states that Scientific Management "presents certain possible benefits to labor and society . . . in its direct relation to labor, is not devoid of beneficial aspects . . . has shown the way along which we may proceed to more advantageous economic results for labor and for society". It enumerates certain diversities and defects of the system as in practice, but states that "Scientific Management is still in its infancy or early trial stages, and immaturity

and failure to attain ideals in practice are necessary accompaniments to the development of any new industrial or social movement". It finds among the causes of present evil, the crude use of a part of the mechanism of Scientific Management, the activity of self-styled experts who have no knowledge or appreciation of the fundamental principles, and the indifference of managers to the labor problems which the system creates and involves. The general labor problems are enumerated and discussed. The report concludes that "our industries should adopt all methods which replace inaccuracy with accurate knowledge and which systematically operate to eliminate economic waste", that "Scientific Management . . . . . has conferred great benefits on industry", but that so far as it does not offer to labor an acceptable solution of social and labor problems it creates, it is the duty of organized labor to combat it.

SCIENTIFIC MANAGEMENT AND THE COLLEGE.

The Carnegie Foundation for the Advancement of Teaching published in 1910 a bulletin entitled "Academic and Industrial Efficiency". The author of the bulletin, Mr. Morris Llewellyn Cooke, pointed out the possibility of increasing and measuring academic efficiency by the devices of Scientific Management. A considerable comment was provoked. One writer feared that the methods proposed would so use up the time of the instructing staff that none would be left for the main business of teaching.

This bulletin and the general public interest establish Scientific Management as a subject for study in colleges and universities. Courses in economics and in works organization and administration had at least touched the subject for some time. Nineteen hundred and eleven brought a further development.

The Dartmouth College catalogue of that year describes a course in business management, stating that it "includes a careful study of the principles of Scientific Management". Lectures on the "Practice of Scientific Management" were given at Harvard University during the same year. The lecturers were engineers of national reputation as industrial managers. They had had experience in the development and installation

of Scientific Management, and were for the most part intimate associates of Mr. Taylor. Other colleges offer courses, some of them in connection with shop or laboratory work, introducing and dealing with the methods and devices of Scientific Management.

Dartmouth College held its first conference on Scientific Management in October, 1911. The addresses were given by men of recognized eminence. The proceedings of the conference were issued in book form by Dartmouth College in 1912.

No considerable movement toward adoption of the suggestions in the Carnegie Foundation bulletin has been observed by the writer. It appears, however, that such a movement will naturally occur, particularly in institutions that offer specific instruction in the principles and practice of Scientific Management.

In order to further stimulate the interest of the academic world, Frank B. Gilbreth issued, in 1913, a general invitation to university and college teachers to attend a summer school. This school was opened in Providence, R. I., on August 4th of that year. Teacher students were in attendance, representing America from California to Nova Scotia. The course consisted of a series of lectures by Mr. Gilbreth and others, some laboratory work in time- and motion-study, and in visits to the shops of the New England Butt Co., where Scientific Management was being developed. Other shops of Providence were inspected. This summer school has just concluded its third session and promises to become a permanent institution.

Mr. Taylor conducted a school of Scientific Management in Philadelphia for a number of years before his death. There were no announcements nor were there general invitations to attend. He seemed to think that little could be accomplished by academic discussion. He was willing to talk when people desired to hear him, but preferred that they should get knowledge of things by contact with them. A favorite saying of his was, "If you want to know what a thing is like, look at it and see". In order that men might have a chance to look and see, he employed a number. They were put to work in shops and offices that were operating under the system. In 1913 the

writer knew four such men who were working in one shop in Philadelphia: Japan, France, England and America were represented.

IMPROVEMENTS IN METHODS AND DEVICES.

Perhaps the most interesting development in Scientific Management of the past few years has been that of improved devices and methods for time and motion study, and in the methods for the selection of workmen.

For the years preceding 1912, the methods of time study followed are very clearly described in a paper, by Mr. H. K. Hathaway, published in Industrial Engineering in 1911.

The apparatus required is very simple. A stop watch, with a decimally-divided dial, that can be started and stopped at any point and set back to zero, a conveniently ruled sheet of paper, some device for holding paper and watch and a lead pencil, are all that the observer needs.

The observer sets down on the ruled sheet what appear to him the elementary divisions of the work to be studied. He then notes the elapsed time from the start of the work to the end of each division. He obtains time for each elementary operation by subtraction. When there are waste motions or when something goes wrong he stops the watch, thus taking out time. Analysis of these records develops the best method and time for any work that is studied.

In 1912 Mr. Frank B. Gilbreth began the use of some new apparatus and methods for time and motion study. With the use of this apparatus a new art, called micro-motion study, has been developed. The apparatus consists of a moving-picture camera and a clock with a large decimally-divided dial. The divisions of the dial, when the hand revolves once in six seconds, represents one one-thousandth of a minute; half divisions may be read. With this apparatus, time and motion study consist of making a moving picture film of the work to be observed, including the dial of the special clock in the field of the camera. Microscopic observation and analysis of the record give the information desired.

The advantages of this method are apparent. Times of extremely small extent may be observed. There is a permanent record of what took place. The record is an accurate one. It

is not warped or biased by the personal equation of the observer. It can be studied by any number of analysts. It is as good in six months as the day it was made; as good when cold as when hot.

Mr. John B. Aldrich, of the New England Butt Co., where this method of time and motion study was first used, tells the following circumstance of the resulting improvement. Before using the method considerable attention had been devoted to the elimination of waste motion and energy in assembling small braiding machines. Instead of picking various parts out of boxes, more or less conveniently arranged on a bench, an assembling rack or packet had been designed that provided definite location for each piece and for convenience in picking up various parts in proper sequence. By micro-motion study, previous times were reduced over two thirds. The photographic time records suggested methods that permitted in one case an operator to accomplish in 8½ minutes what before required 37½ minutes.

So far as the writer is aware there has been no general adoption of this method of motion and time study. In the opinion of some industrial engineers it is unnecessarily refined and exact, for at least the initial investigation. The apparatus is, of course, somewhat expensive, and there are, no doubt, opportunities for profitable investigation by a trained observer with a stop watch.

Mr. Gilbreth is the inventor of another novel and interesting form of motion and time record. This record is also a photograph. The apparatus consists of a stereoscopic camera and a small constant or intermittent light. The latter is fastened to the hand of the workman or to an implement, the motion of which it is desired to record. A picture is taken, the exposure lasting through one or more complete cycles of operations. The resulting photograph is generally blurred, the distinct image being confined to the path shown for the moving light. If the light is intermittent, the path is a succession of bright dots or dashes. The period of the light being known, the time for various parts of the cycle of operations may be determined. Direction of motion is indicated by using a light that comes on suddenly and dies out slowly, the bright dashes

on the photograph then appear pointed or narrowed at the forward end. The stereoscopic camera is used in order that the picture may show depth. Photographic records of this sort are called cyclegraphs or chronocyclegraphs, according as a constant or intermittent light is employed. It appears probable that this form of record will find considerable application. Indecision and waste motion are clearly indicated by it.

So far as the writer knows, there has been no method described until recently, by any one having even a remote connection with Scientific Management, for the scientific selection of workmen. The plan of the Taylor group seems to be to use careful judgment and the method of trial and error. Successful accomplishment of task appears to be considered in some instances proof of fitness.

A book entitled "Psychology and Industrial Efficiency", by Prof. Hugo Munsterberg, describes the use of experimental psychology in selecting fit employees for various services. At the close of the book Prof. Munsterberg says, "The aim will never be for real experimental researches to be performed by the foreman in the workshop . . . slowly a system of rules and prescriptions may be worked out which may be used as patterns". These will require fitting to the special situation, which fitting will demand the services of trained psychologists.

A method for the selection of workmen is described in "The Job, the Man, and the Boss", by Dr. Katharine M. H. Blackford and Mr. Arthur Newcomb, published in 1914. This book is an exposition of the merits of something like the once-called "science of phrenology". The writer believes that the method described has little or no scientific basis, that success attributed to its use has been due to the application of judgment, either conscious or unconscious. The following abstract of a review in the Scientific American of May 18, 1914, might indicate that the writer was alone in this opinion, but others have expressed the same idea somewhat more forcibly:

"Dr. Blackford has devised a system which seeks to introduce scientific methods where hitherto there has been only guessing or intuition. It is a matter of great importance, as practice has shown, whether a man who applies for a particular

job is long-headed or round-headed, blond or brunette, convex or concave in profile, high-browed or low-browed, fine skinned or coarse skinned. The system as it is outlined in this book has been in successful use in many large organizations; as it stands, it is the first really scientific attempt to introduce definite principles, easily grasped, where there has been nothing but folly, ignorance and injustice."

SOCIETIES.

The organization of a Society for the Promotion of Scientific Management and of a number of Efficiency Societies is a development of very recent years. The purpose of these societies is the exchange of information and data between members, direction of study and investigation along profitable lines, and education of the public. An International Efficiency Society was formed in October 1913. The object was "to organize efficiency societies and men interested in efficiency in a central body for the purpose of furthering the best interests of efficiency in commercial, financial, public service, education and industrial enterprises of all kinds".

LITERATURE.

The literature of Scientific Management is mainly the product of the past five years. One bibliography published in 1914 lists thirty-three books that bear the date of 1910 or later. Those published before 1910 number only seven, and among them is included the volume by Chas. Babbage entitled "The Economy of Manufactures" published in 1832.

Many of the books now available are reprints of series articles that appeared in the technical press later than 1909. The Engineering Index of 1906 lists two papers referring specifically to Scientific Management. Up to 1911 a very few references appeared each year. In the 1911 index, 23 articles are listed; in 1912 there are 20 on Scientific Management and 7 on time study; in 1913 there are 26 on Scientific Management, 5 on time study, 2 on motion study.

In 1914 the important papers on Scientific Management fell to 10 in number, but some 30 discussions of industrial efficiency appeared. Thus far this year, 21 articles on Scientific Manage-

ment have been published. While in the subject matter of many papers written in the past three years there is little or no direct reference to the term Scientific Management, some of them may be properly classed with the literature of the subject. There is a growing tendency to drop the term and to use the more general one of Efficiency Engineering. Just now, indeed, "efficiency" seems to many a very much overworked word.

The very sudden increase in this literature in 1911 was the result of an insistent public demand for information. This demand arose from widespread public interest in the investigation of the Interstate Commerce Commission and the hearings before the Special Committee appointed to investigate the "Taylor and other systems".

Today the most comprehensive treatise on the subject is a book entitled "Scientific Management", edited by Mr. C. Bertrand Thompson, lecturer on manufacturing in Harvard University.

It is a "collection of the more important articles that describe the Taylor system". The bibliography at the end of the volume is the most complete yet published.

DIFFERENCES OF OPINION.

Some years ago Mr. Wilfred Lewis of the Tabor Manufacturing Co. was advised to "keep down the number of clerks and non-producers". Success, he was told, varied directly as the "ratio of producers to non-producers". "One good superintendent to lay out the work and keep it moving through the shop" was all that was needed.

There are not a few managers today who would say the above advice was good and that it has lost none of its worth. It is ridiculous to suppose, they say, that in a business whose overhead charges are from 150 to 200% of the direct labor cost, any reduction in the cost of production can come from an increase in one of the items of overhead. They say that the principles of Scientific Management are purely theoretical, and while very pretty as a theory, impractical of execution. They are all agreed that equipment should be the best procurable, that tools should be properly ground, that workmen should have plenty to do and that they should be required in some

way to do a good day's work. They do not generally, however, conform to the opinion that a good machinist is incapable of forming on an ordinary grinder the best-shaped tools for any service, that he needs any instructions as to the most economical speed, feed, or depth of cut. They think that a machine operator can slap a belt with his hand and tell if it has the right tension.

Managers say that possibly the Taylor system is suited to a real factory, where there is a minute division of labor and where many articles are made in duplicate. It cannot be of any use to them; they make only one thing of a kind, therefore it is impossible to standardize operations and to plan apart from performance. The veritable army of clerks, time-keepers, store and tool-room attendants, gang bosses, inspectors, and other non-chip makers which form a part of the mechanism appear to the many but a further burden on a business already loaded to the breaking point. Some admit that under more stable conditions Scientific Management might be applied with profit, but say that their trade is too uncertain to warrant the maintenance of the system. They must let men go in hard times and pick them up again when conditions are better. This they see they cannot do under Scientific Management. When money and time has been expended in training men for specific duties, they must be kept employed in order to hope for some return.

In an academic discussion managers will admit the soundness of the basic principles. They claim that they are applying them so far as practicable. What they mainly object to in Scientific Management, as described, is the mechanism—the time study, the records, the route charts and diagrams. These are, they say, unnecessary; they are even foolish.

Professional friends of labor urge that Scientific Management is but another method of depriving the workman of his rights. Under it he is reduced to a mere automaton. He no longer thinks. Even if it reduces cost of production, there is no fair division of the profits.

Enthusiastic supporters of the system reply: "Any who will look can see that in Scientific Management lies the solution of all the problems of industry". The surplus, or the difference between selling price and flat costs, is so great under the system

that there need be and is no quarrel over its division. Employees and employers both develop personal character and efficiency to a degree impossible under other conditions."

CONCLUSION.

Scientific Management may be effectively promoted if qualified experts are so tagged that employers may be sure that they are not securing the services of fakirs, and if experts and employers alike are very careful that labor-saving management does not become even momentarily labor-displacing management. The attitude of organized labor is a natural one. Labor sees in Scientific Management what it has seen in labor-saving machinery, at least temporary unemployment of individuals who do not fit into the new system and methods, necessary readjustments, and consequent hardship. It is possible that organized labor may bring sufficient pressure to bear to secure further hostile legislation. It is understood that plans are now being made to have future appropriation bills provided with clauses prohibitory to the development of Scientific Management in any Government departments. A study of the report of the Commission on Industrial Relations, together with knowledge that Government works are not sweat shops, and that economy in production is to the advantage of the nation as a whole, leads to the conclusion that hostile legislation so far initiated or accomplished has been unwise and ill-considered.

The endurance of early installations, their internal growth, and the increasing extent and number of applications show that Scientific Management is more than a passing fancy or an impractical theory. While vigorous opponents are loud in their condemnation, the number of earnest advocates, who have full appreciation of their responsibility to humanity, is growing. Individual and collective interest demand that this movement shall continue toward the realization of its ideal, the direction of human effort so that there may be a maximum return per unit expended.

DISCUSSION

Prof. Sullivan. **Prof. G. L. Sullivan,*** said that he agreed with the author of the paper on scientific management in his opinion of Dr. Blackford's method of selecting workmen. He thought the only way to learn if a man were suited to a particular job was to try him.

Mr. O'Connell. **Mr. J. M. O'Connell** thought the question of scientific management one that considerably affected the worker. The improvements in machinery during late years had done away with the demand for labor. He asked who would look after the unemployed if, through invention and scientific methods, their number were increased? How would it affect those who were working at present? What effect would it have on workingmen if 25 or 30% of those now employed produced, with the introduction of scientific methods, all that is required by the whole population?

Mr. Jacobs. **Mr. J. L. Jacobs,**† Assoc. M. Am. Soc. C. E., expressed the opinion that the aim of scientific management and of motion study was to increase the efficiency of the man by increasing his ability, and therefore increasing his earning power. The result of this was the broadening of opportunity for the workman. He said that in the building trades there was great trouble in securing a day's work for a day's pay. Union rules narrowed each workman's activity. The plasterer demanded walls prepared for his work. The bricklayer required that bricks, mortar, and staging be made ready for his use and that in the erection of a wall no change should be made in the line until the slowest man had completed his portion. In other words, he thought the building trades restricted operations to suit the slowest man.

Mr. Jacobs could not see the application of Mr. Gilbreth's devices and methods to the building trades. He thought the measurements unnecessarily refined and accurate.

Prof. Lesley. **Prof. Lesley** said that the introduction of scientific management with the consequent increase in the efficiency of labor and production, did not necessarily increase the number of the unemployed. As an example, the Tabor Manufacturing Company now employ the same number of men that they did before the installation of the system. The output of the plant is about three times what it was under the previous condition. The price is lower and the demand greater. He thought the ideal of scientific management was not to displace labor by means of machinery or through a system, but to free it to a field of greater usefulness. New industries were continually developing, demanding the services of workmen thus free. The automobile industry was cited as an illustration. If through the general introduction of labor-saving management, as well as labor-saving machinery, 35% of the present working force were able to produce everything for which there was a demand, then the problem of the unemployed might naturally be solved by the reduction of the hours of labor to 35%

* Prof. of Mechanical Engineering, University of Santa Clara, Santa Clara, Calif.

† Res. Mgr., James Stewart & Co., Inc., Houston, Texas.

of those now in force. However, it seemed safe to predict that should such increase in efficiency of labor be brought about it would continue to have the effect in the future that it has had in the past—a reduction in cost, bringing about an increased consumption and demand. Prof. Lesley.

Mr. J. M. O'Connell said that a few years ago a leading San Francisco newspaper employed probably 200 men in type-setting, type-founding, etc., that now one man with a linotype sets up as much as 7 or 8 men formerly did by hand. He asked what had become of those who formerly did this work. He thought the automobile had been a detriment to the Pacific Coast. In one district there had at one time been a large number of blacksmith shops, harness shops, etc. The money for work in these shops remained in San Francisco. Now only 15% of the money paid for automobiles remains on the Pacific Coast, the remainder going to the automobile centers of the East. Where formerly repairs were made by hand, replacements are now secured from the manufacturer. As a result there is nothing left for the blacksmith, horseshoer and harness maker but farm work. There is an army of unemployed who are willing to work. The results of modern machinery might be to increase our demands, but luxurious living should not be a part of such a demand. Mr. O'Connell.

Mr. O'Connell wished the improvement in machinery and increase in efficiency of workmen would help everyone, but thought it did not.

Mr. Jacobs thought the solution of Mr. O'Connell's problem the duty of a sociologist rather than an engineer. Mr. Jacobs.

Prof. W. F. Durand,* Chairman, said that, although he was unable to answer Mr. O'Connell's questions, he believed many engineers, particularly those who are teaching in colleges and universities, fully realized the difficulties of the situation. They were trying to devise means for helping society as a whole and not any particular class. If progress is to be made, readjustments must necessarily accompany it, and with readjustments which come rapidly it is inevitable that there shall be individual suffering. The purpose of the thoughtful engineer is to reduce this individual suffering to the minimum. Prof. Durand.

Mr. Walter M. Polakov,† Mem. Am. Soc. M. E. (by letter), expressed the view that the outline of the scope and field of the successful application of so-called Scientific Management is incomplete without due reference to the vast branch of industry which is known as Public Utilities. Mr. Polakov.

The problems with which the management of central stations and power plants meets, the specific managerial tasks in connection with serving the public—whether customers of light and power, or passengers on urban, interurban, or trunk roads—are so distinctly peculiar and unlike those met with in manufacture, that until very recently no attempt was made to apply the principles of scientific analysis and synthesis to their management.

On the other hand, the design of equipment employed for the genera-

* Prof. of Mechanical Engineering, Leland Stanford, Jr., University, Calif.

† Supt. of Power, N. Y., N. H. & H. R. R. Co., New Haven, Conn.

Mr. Polakov.

tion, transmission and utilization of power is so precisely determined by the laws of physics, and the results of operation in terms of thermal efficiency ratio can be so accurately pre-determined, that it was generally taken for granted that with the given equipment, certain results will follow automatically and any further studies are hardy warranted.

Two well-known results of these misconceptions are that economy was expected from the equipment, not from men and methods, and that the minute analysis of costs of production, etc., was overlooked, only the final results being watched.

When certain public utility commissions were created and desired to know what it cost the companies to serve a certain class of customers in certain localities, the information was unobtainable; whereas, an average manufacturer knows the cost of every part of his product in its progress from the raw material to the finished product. The manufacturer of power hardly bothers himself to find out how much it costs him to generate steam and how much of this steam is used per kilowatt-hour, and what it costs him to deliver this to residential customers in one locality or in the other, or to a mill in the same zone. Still less are the electric companies in a position to tell how much it costs them to maintain in first-class operating condition one class of motor or another, one type of pump, stoker, economizer, turbo-generator or the other.

But the cardinal question to which hardly one company could give an intelligent answer is how much it should cost to generate, transmit and serve the power. Happy ignorance on this question saves worry to managers and financiers, as they cannot, without such knowledge, even conceive how much money and energy goes to waste.

During the last decade, this and similar questions were asked strongly and persistently enough to awaken some of the companies and municipalities, and those who were courageous enough to admit the managerial incompetency in this respect, were greatly benefited by the results secured through scientific analysis applied by the inauguration of new methods of management, in which task work with bonus played an important part.

The first attempt conducted on a large scale to secure operating economies in power plants was made some ten years ago on the Atchison, Topeka & Santa Fe R. R. The infantile method used is of interest chiefly by way of contrast with the ten years' development in the art. It was recognized that:

1. The actual performance was worse than the possible.
2. Local conditions of various plants call for different standards.

The work of establishing standards of performance was based not on actual experiments, but on average statistical data of the past, reduced by the guessed percentage suspected as waste. Then an allotment was made for each individual plant as to how much fuel should reasonably be consumed there per month. Similarly, pay-rolls were revised and certain labor costs were assumed as reasonable. These two records multiplied by constants arbitrarily set (6 for fuel and 4 for labor) added together and

Mr. Polakov.

divided by ten give the figure of merit used as a basis for payment of bonus, the bonus itself being adjusted on a sliding scale. The shortcomings of this crude method are apparent:

1. Men are left to discover for themselves how to secure the results desired by the management.

2. The management, shifting the responsibility to the men, was uncertain as to the exact amount of saving accomplished due to individual efforts, and therefore could not fix a definite bonus.

The results accomplished by the Santa Fe men were, however, sufficiently satisfactory to the management and, not burdening itself with further responsibilities, the management still maintains this method.

Numerous other attempts were made by other concerns producing power, either for their own use or for sale, to organize the management along lines more definite than a mere request of men "to do better." Inasmuch as the largest portion of power operating expense is for fuel, the first efforts to secure economy were made in the boiler plants.

"Various schemes have been used as the basis of task setting for firemen, which to the writer's knowledge have always created dissatisfaction. Certain of these are as follows:

a. The cost of steam generated was used for the basis of the task in the boiler room of a large cement plant, and a premium offered for the reduction of this cost. But as firemen have no control over the purchase of fuel, maintenance of equipment, etc., this task involved the standardizing of conditions of combustion, for which no instruments were provided and no definite standard or aim was set before them, and the scheme was soon abandoned.

b. The high percentage of CO_2 in flue gas was adopted as a task basis for firemen in several plants, but the men were not trained nor were they even shown how to obtain it. When they occasionally attained the mark, the question remained undecided whether high percentage of carbon dioxide was coincident with the most economical steam generation or not, and the method proved generally unsatisfactory.

c. A high percentage of CO_2 and low percentage of combustible in the ashes were factors upon which another attempt was made to specify more definitely the firemen's task. The question remains, however, whether the conditions which the firemen must observe to attain the task and produce gas rich in carbon dioxide and an ash with little carbon are actually the best for transmitting the heat of the gases to the water and steam and whether with variable load the same standard is equally beneficial.

d. A limit on coal consumption as a task for railroad firemen was favored at one time. This idea, probably the most ridiculous and illogical, soon demonstrated its own weakness and has been almost entirely abandoned".*

From such and similar unsatisfactory experiments a simple and broad conclusion may be drawn: In order to operate a public utility enterprise

* From Task Setting for Firemen, W. N. Polakov, Trans. A. S. M. E., 1913.

Mr. Polakov.

at a maximum profit-yielding rate, an exact and complete knowledge of all factors involved is essential.

It is radically wrong to tell the men in general terms "to do better" next month, if last month's figures were too high. Such a statement would demoralize the organization by the silent admission that the men know more about the running of the plant than the management.

The costs, as a function of the method of operation, other conditions being constant, cannot be controlled unless the methods of operation are under control, and these are not under control until the best method is known, written instructions are prepared, the men are trained how to live up to them, and all conditions are kept so that the task set for them is within reach. No task, however easily attainable, will be accomplished unless men are offered substantial reward for learning how to make their services more valuable to the employer.

When all these conditions are lived up to in the power plant, and not before, can an engineer, manager, or financier say, and not merely brag, that he controls the production.

Actual application of these principles, as made by the writer, to gas and electric companies, trolley systems, electrified trunk lines, municipal plants and factory power plants, discloses the fact that the accomplishment of a net saving in operating costs from 25 to 40% demands as a pre-requisite the reshaping of the operating organization.

A brief outline of such a successful organization may be made as follows:

The management assumes the responsibility as to knowledge of:

1. What efficiency each unit of equipment or any combination of units can produce under varying conditions.
2. What conditions are necessary and sufficient for producing the desired result.
3. How to secure the desired conditions.
4. How to maintain these conditions or how to re-adjust them under variable circumstances.
5. How to train the employees to accomplish their tasks.
6. How to stimulate the employees to follow the instruction cards and permanently live up to the tasks set for them.

The first three requirements necessitate a bureau of experiments and researches, including a testing department.

The duty of such an organization is to collect and work out all data pertaining to the industry and, by determining maximum and minimum limits, to prepare exact written instruction cards describing in all details the work of every man employed.

Condition No. 4 is fulfilled by the planning department, whose duty is to specify and direct all maintenance and up-keep work on the system, specify and provide all materials and supplies, issue the instructions to the men, assign the best fitted men to jobs, keep and work out all records and adjust for all changes beyond the control of operating force.

Mr. Polakov.

Condition No. 5 might be a function of either the planning department or of special representatives of the management acting as instructors, or later as work bosses, helping the men to understand and intelligently follow up the instructions and eventually form a habit of efficient operation.

Condition No. 6 should not be inaugurated until the other five outlined above are in working order. It means additional compensation to the managers, planning clerks, instructors, storekeepers, etc., setting their bonus on the basis of the value of the help they render to the operatives, attendants and maintenance men who are rewarded directly.

It is to be emphasized that the management assuming the responsibility for the correctness of instruction cards and for the best maintenance of physical conditions, does not pay the bonus for the result but for learning the prescribed way, and should the management fail to maintain the conditions necessary for the employees to live up to their instructions, the bonus is not forfeited, but paid, forming a penalty on the management for failing to fulfill its duty.

No matter how close the similarity of these main principles with scientific management in manufacturing establishments, the radical differences, as manifest in general-station work and in application to public utilities, are two-fold.

First: The main object is quality of work, not quantity or output, which is beyond the control of the operatives.

Second: The effect of more efficient operation not only reduces fatigue and improves working conditions for the employee, but directly and immediately affects the welfare of the community, through the possibilities of better and cheaper service.

Paper No. 238

INDUSTRIAL MANAGEMENT.

By

A. HAMILTON CHURCH
Consulting Industrial Engineer
New York, N. Y., U. S. A.

During the past fifteen or twenty years, owing in great part to the increasing complexity and scale of manufacturing operations, it has been obvious that the older traditions and practices of what is termed "management" were beginning to prove inadequate to modern needs. In a few words the change may be described as a movement away from rule-of-thumb towards quantitative treatment of management problems.

Management is, of course, a very comprehensive term. It extends all the way from the large questions of business policy and finance down to the detail specification of the daily duties of particular men. It includes, therefore, what may be termed the "determinative" element, and the "administrative" element —the former concerned with the general shaping of the course of affairs, and the latter occupied with the making of arrangements whereby the policy thus originated is carried out in practice. Improvements in the art of management lie almost wholly within the latter sphere.

As far as dealt with in this paper, Industrial Management may be defined as the organization and administration of industrial plants in accordance with some previously determined aim or policy. It comprises the purchase, storage, handling and transportation of materials; the engagement and organization of all kinds of labor, both mental and physical; the provision and upkeep of suitable premises, machinery and equipment; the design of product; control of the technical processes of manufacture; and the storage and marketing of product.

The history of the development of management cannot be considered in this paper, first, because it is a somewhat controversial question, and it would be a thankless task to try to distinguish between rival claims to originality in the various improvements that have been contributed by a number of individuals over a considerable period of years; and, secondly, because such an attempt would occupy too much time, and even then would be of little practical value. To properly undertake such a task, we must wait until modern management methods have taken a somewhat more settled form, and have secured a somewhat more uniform and general recognition, so that a general perspective of the whole movement may be secured.

This attitude is the more necessary inasmuch as what has taken place is not so much revolution as evolution. The new elements that have been brought into prominence are in few cases wholly new. I do not mean merely that they have in many cases been of the nature of re-discoveries of practices that were at one time known and then passed out of use, though this appears, unquestionably, the case as regards "time-study" and some other modern practices. Every art is full of instances of inventions that were born before their time, and this in no way diminishes the importance of their re-discovery and fresh application under wholly new conditions. The point I wish to make is that progress has been evolutionary in the sense that most of the new devices have existed in more or less rudimentary form in the past, but the development of industry has so altered their relations to the general process of manufacturing that they had, perforce, to be developed, improved and given greater precision.

The general tendency under which management has been evolving is that of acquiring a more precise and exhaustive knowledge: (1) of what is to be undertaken, (2) of the forces and materials by and through which work is to be done, and (3) of the methods by which the forces are to be applied to the materials so as to produce the required effect in the shortest time and with the least expenditure of effort. The peculiar character of the management problem is indicated if we realize that, for the most part, the forces to be organized by the administrator are human forces. For this reason management

involves much more subtle elements than are commonly found in any art, such as electrical engineering, that deals with physical forces alone.

It is very important to understand that Industrial Management as a specific art, based on some approach to scientific principles, is a wholly different matter from the technical art of manufacture. If this were not so, then obviously there would be as many different kinds of management as there are separate industries, one might almost say, as there are separate plants. The art of dyeing has very little similarity to the art of producing steel ingots, and the manufacture of locomotives little in common with the manufacture of cotton yarn. The technical processes in each of these cases have no application at all to any other. Great experience in spinning yarn would be no qualification for setting up a manufacture of shrapnel. Nevertheless, all these industries, so diverse as regards the technical knowledge required, are subject to common principles when it comes to a question of administration, and it is precisely these common principles that it is the task of industrial management to discover and perfect.

This distinction must be insisted on, because it is frequently supposed that because, historically speaking, the more recent development of modern management methods was carried on side by side with, and to some slight extent might be considered to have grown out of, the introduction of high-speed steel into engineering industry, therefore such matters as "cutting speeds" and "feeds" are matters of industrial management. Such an idea is quite erroneous. They belong wholly to the technical practice of machine shops. It was the more strenuous conditions set up in machine shops by the introduction of high-speed steel that made the necessity of reform of management methods more visible. That certain management necessities, disclosed by the introduction of high-speed steel, set going a whole chain of development is purely accidental, and the same might have happened in any other industry which was being subjected to sudden change in technical methods which had the effect of intensifying the movement which it is the business of management to maintain.

In the same way, industrial management has nothing to do with the perfection of technical equipment, or of technical design. These matters have to do with the technics of manufacture but not with the technics of management. In discussing management, therefore, we must begin by assuming that the design of the proposed product and the equipment that has been gathered together to make this product are already the best that technical experience demands, since improvement in management will not remedy any technical defect, any more than a technical improvement will directly increase the efficiency of management.

These remarks apply to the operative equipment—to the machines, tools, looms, vats, presses, mixers, ovens, and so forth, by which technical work is done on material. On the other hand, all other equipment comes under the notice of management in as far as its intelligent functioning is concerned. Of such equipment may be mentioned buildings and their heating and ventilating appliances, conveying and transportation equipment of every kind, power equipment, and so forth. It will be noticed that whereas the former class of machinery has to do with a particular industry, and can rarely or never be imagined as transferable to another industry, the latter class of equipment is that which is common to nearly all forms of manufacturing, and is therefore properly considered as being within the scope of management—the science or art which is concerned with those problems that are common to industry in general.

Having thus roughly defined what Industrial Management is, the nature of the improvements that have been made in its practice in the last decade or so may be generally touched on. The great development has been in the much greater use of Analysis as a tool or instrument of management. Formerly, people were content with merely approximate knowledge. "We are nearly out of tool steel"; "Order some", might be considered a typical instance of the older method. Today we are beginning to find that vagueness of this kind is no longer possible. We begin by studying the precise kind of steel that we want for our work. We decide how much of this should

always be kept in stock. We also decide how much shall be ordered at a time, whenever our stock has fallen below a set limit. In other words we analyse all the steps of the problem of tool-steel consumption. We examine all its stages, we follow out in detail its history, and when we have done this we place quantitative values on all the transactions that can be foreseen.

Today this principle of analysing all the elements of each problem has become very prominent. The careful manner in which routing is considered and arranged is a case in point. But though this process of analysis is carried much farther than would have been considered "practical" a generation ago, it is necessary at the same time to remember that it was always more or less considered, and compliance with its demands was always implied in the rule-of-thumb days. The function was rudimentary then; it is fully developed today; but the lines of gradual expansion could still be traced by anyone who cared to go into the history of the matter.

When we consider that manufacturing is, in fact, made up of an almost infinite number of separate, disconnected acts; that it consists of thousands of independently made steps by, frequently, hundreds of individuals, and that the operation as a whole may continue to progress even though a considerable number of these steps are taken out of their proper order, and made at inconvenient times, we can understand why the application of analysis to management details has had so wide a field, and so sudden a success.

Most of the progress in management that has been made in the last twenty years has been due to the introduction and use of analysis. It would be perhaps more proper to say the re-introduction of analysis, for it is a curious but well ascertained fact that very critical and detailed methods of analysis were in use, particularly in the way of process- and time-study, in the early stages of factory development, though these methods seem afterwards to have been entirely disused and forgotten.

In attributing much of modern progress in management to the skilful and discriminating use of analysis as applied to

the innumerable acts that go to make up the routine of manufacture, we must not forget that Analysis is not a constructive instrument. It distinguishes, differentiates, enables us to find out which are the important and salient and which the unimportant and negligible steps in any series. But it does not make anything. It helps to settle relative values, but it does not build. It is not a constructive instrument.

To complement analysis, synthesis is necessary. While analysis is an instrument for dissecting, synthesis is an instrument for combining. It is by far, from the viewpoint of management, the older of the two. It represents the selective power. In the early stages of any art it is exercised in a way that depends on instinct or judgment for the elements of a decision. Frequently it makes mistakes, because its judgments are not based on a true appreciation of the elements that enter into the problem. When industry is still in a primitive stage, the elements entering into management are few, and though erroneous judgments are not difficult to make, the mind is able to a large extent to analyse these elements almost unconsciously. But as soon as conditions become really complex, this unconscious analysis must be superseded by conscious and very exact analysis, in order that a true and complete synthesis may be reached.

The general distinction between synthesis and analysis may be defined by stating that synthesis selects means to effect large ends, while analysis determines the exact relations of the different elements of means. The one is general and constructive, the other local and observing. Synthesis keeps its attention fixed on some predetermined end and seeks to shape forces accordingly. Analysis does not concern itself with ends at all, but merely with a correct presentation of minute relations and minute facts. Analysis can be, and too frequently is, applied to work of which the ultimate value may prove to be very small, but synthesis always has an end of definite value in view.

This distinction is not merely an academic one. It has a practical bearing on successful management. A successful organization for manufacturing may be regarded as a collection of small separate aims—a combination of grouped activi-

ties, each devoted to a special end. These groups must be coördinated and synthesized so that these minor and immediate ends are merged in the larger aim, namely, the efficient production of some specific article.

Industrial synthesis is not merely a grouping of men. It is essentially a grouping of activities or functions. Any individual man may be working today as a stoker, and tomorrow as a time-keeper, but the significant point about this would not be that the man has been transferred from one department to another; it is that the direction of his activity has been changed—he is now fulfilling a different function. Management, therefore, is a synthesis of separate functions. The interior arrangements and mechanism of each function can be studied by the aid of analysis, but analysis will not aid us to organize and coördinate these functions for a common end.

This essential difference in the part played by the two intellectual instruments of management—analysis and synthesis—has been enlarged upon because the more recent advances in the art have been brought about by the development to a degree before unheard of, of the powerful lever of analytical study of conditions. But the synthetic side of management has not been correspondingly developed beyond its former stage. Thus there has arisen an idea that analysis is a method of management, whereas it is only one of the instruments of management, and indeed the less essential of the two. That it is the less essential is proven by the fact that it is only recently that it has been highly developed, and all the not inconsiderable triumphs of industry in the past were attained without its aid. I believe it to be true that the failures of the new methods, where they have failed, have been due to inability to perceive that synthetic mastery has not by any means been displaced, or rendered less vitally important to industry, but simply that it has been supplemented by a new and powerful instrument of research. Analysis discusses and reveals, but synthesis chooses and combines. It is evident that neither of these processes can be henceforth dispensed with.

Management being a synthesis of functions, it follows that a very clear idea of these functions is necessary. In the course

of my own studies of this question, published last year*, I have found that these functions are few and capable of rigid definition. They form, in fact, water-tight compartments, since the efficiency of any one function is wholly independent of the efficiency of the others. Briefly stated, these functions are:

1. Design
2. Equipment
3. Control
4. Comparison
5. Operation

No form of activity exists in a plant for the purposes of production that cannot be included in one or other of these five functional divisions. Consequently we can say that production is a synthesis of Design, Equipment, Control, Comparison and Operation. Not only is this so, but it has been found possible to trace the gradual separating out or "devolution" of each of these functions from the early beginnings of industry to the modern highly organized plants. It should be mentioned, however, that only the administrative side of management is included in this classification. The determinative side, which is responsible for "policy", stands outside and above these administrative functions, which, indeed, only exist for the purpose of carrying out such policy as and when determined.

In attempting to describe the present development of modern management, it will be convenient to treat the subject according to the classifications of functions just mentioned. To begin with, therefore, we may consider the function of "design", by which the mental picture of product is physically reproduced. The product so pictured is afterwards made tangible and actual by the aid of the remaining functions. It will be obvious that the function of design does not assume equal dimensions in all industries. It is always present, but often quite rudimentary, as for example in cotton spinning. But in other industries, and particularly in the great group of engineering industries, it takes on an enormous extension. Very elaborate preliminary arrangements are necessary before a

* See "The Science and Practice of Management". 1914. New York, The Engineering Magazine Co.

machine can be constructed and put together, and the modern ideas are very well illustrated by the increasing precision given to designs, and even to the greater extension given to the idea of what is comprised by design than formerly.

Engineering design for manufacture frequently includes today (1) the usual specification of the shape, size and dimensions of components, and these components are made frequently to conform to what is called "standardization" or the principle of "fewest things"; (2) specification of certain auxiliary appliances, such as jigs and templets to be used in producing each component; (3) specification of what machines are to be used in the manufacture of each component; (4) specification of the tools, reamers, drills, and other dimension-giving appliances that are to be used; (5) specification of the order in which the step in manufacture of the component is to be made; (6) specification of the standard time that is to be consumed in carrying out these steps on each component.

It may not be recognized at first sight that all these specifications are true "designs". But what else are they? They obviously belong to specific pieces and are the forecast of what should be performed in regard to each. The proof comes when we consider that after all these elaborate specifications have been prepared, the piece may never be made at all. They are clearly therefore steps taken antecedent to manufacture to indicate its path, and consequently are matters of "design" and "design" only. Design is a specification of intention, and all the steps just enumerated were specifications of intention, even though it might happen that the intention was never realized, and the machine never made.

Now in the preparation of such designs, the modern instrument of analysis sometimes plays a great part. Not in all industries, for it frequently happens that machines will only do one thing, at one speed, and in one way. But in proportion as machines are universal, and most machine tools are of this kind, there arises the possibility of endless combinations of feeds and speeds, of methods of supporting or "jigging" the piece, of doing this before that, and of using some hole or groove already made as the datum line for a new operation.

Under such circumstances an exact analysis of these elements, and even of the physical handling of the tools and levers by which work is performed, becomes desirable. Thus we have what is called "time-study" with its further extension into "motion-study" by which we map out the shortest way to perform operations, and this analysis is embodied in elaborate (sometimes too elaborate) written instructions, which then become part of the design of the particular piece. They do not apply to any other piece.

Thus, we see that "design", under advanced modern methods in those industries where the necessity exists, really is made up of four distinct parts: (1) The "piece" or component, its shape and dimensions, finish, etc.; (2) the accessories peculiar to the manufacture of the piece; (3) the method of operating on the piece; (4) the time to be consumed in operating on the piece.

There is also a technical aspect of design that is wholly separate from its aspect as above described. This may be termed "design for use". The component or machine when designed, and made, may prove unsatisfactory or even worthless for the purpose intended. Management as such—as a special science or art—has nothing to do with this. The technical efficiency of a particular design is obviously a matter pertaining to the special industry, and poor designing for "use" may exist alongside the best type of organized management. Conversely, we may have excellent technical designs and very poor management. The technical efficiency of "design" is not a part of the science or art of administration. In discussing management problems, we must always assume that technical efficiency is at a maximum; otherwise we complicate the problem so that its true bearings can no longer be perceived.

Before proceeding to discuss the remaining functions of management, the exact significance of the application of analysis to the details of design must be ascertained. What is it we do when we make a design, when we specify requirements under any of the four heads just mentioned? What we do is to establish "standards". A large amount of the progress in management is due to the recognition of the value of carefully

ascertained standards in regard to the various acts of production. It must of course be understood that no standard used in production is anything like a final or last word on the subject with which it deals. If, after analysis of the elements of a problem, we decide that a certain result is attainable, we make this result a standard by which to measure actual attainment. A "standard" is thus a datum line; but it is not often a fixed datum like a mile-post, because industry has as yet reached no condition anywhere of which it may be said "this is the uttermost possible". We set up a standard as a convenient measure or reference, but we may either fail to reach it in practice, or we may surpass it. In the latter case we have made a new "standard", which in its turn will endure until superseded.

The use of standards is not of course entirely new. Always there has been a more or less conscious use of them, but they were embodied in that vague and mysterious region, the instinct of the practical man, and were not for the most part quantitatively expressed. A certain operation, for example, coming under scrutiny of the practical man, would be assigned a period of duration within vague limits. It might take "from a day to a day-and-a-half". That is, the variation might be fifty percent. This approximation, though not very scientific, is still a standard. The modern tendency, however, is to limit such variations to 5%, to 1%, or some finer degree, according to the nature of the matter investigated. But the only way to do this is by careful analysis of the elements—you cannot pump accurate approximations out of merely instinctive judgments made by looking over the field generally.

The modern use of standards, though increasing, is probably only at the beginning of its career. In fact as soon as we begin to collect standards of general application, we are at once confronted with a realization of how little has yet been reduced to positive and exact knowledge, in regard to management. Such standards as we have are as yet mostly confined to specific instances, such as the time study of particular processes. Few of these can as yet be expressed in general form, such as the standard time or cost of removing a pound of chips

by planing, milling or turning. The problem has, indeed, hardly been attacked as yet from that view-point.

Generally speaking, however, the use of analysis is closely connected with either the establishment of prospective standards, or the attainment of already existing standards. Not all standards can be quantitatively expressed. In "routing", for example, that is, analysing the path of product with a view to reducing its travel to a minimum, it would be hard to put the result into any significant figures. But in these and similar instances, there is an implied standard. In this case the implied standard is the "path of least effort".

The next function to claim attention is that of "equipment". This is a double-barrelled function, inasmuch as it has both a static and an active aspect. The first represents the equipment installed, but not working. The second represents its actual functioning. In other words we have to regard "equipment" from the viewpoints of its "installation" and also of its use. In regard to equipment, modern analytical methods have wide application.

Before setting up a plant, the nature of the product will naturally have been determined. The first step in deciding the nature and form of our equipment will be an analysis of the components of this product, so that an estimate can be made of the varieties of equipment that will be required. Next the quantitative treatment of these varieties will be made, so that the relative importance of operative machinery, power plant, storage, handling and transporting equipment, offices, etc., can be determined. This will lead to a systematic allotment of the quantity of space required for each type of equipment. The arrangement of the equipment is, however, not yet provided for. This is based on a careful analysis of the sequence of processes, both within and between departments. Then the best arrangement of buildings, yards, offices and machinery in regard to the space available can be made.

Some of these successive analyses have perhaps always been made to a greater or less degree in setting up a new plant. But they are carried today to a much greater degree of refinement than was formerly customary—some were perhaps

absent altogether. It would almost seem, to judge by many instances, that the idea of economy in the direct handling of material along the shortest possible path hardly ever occurred to manufacturers a generation or two ago. It was probably regarded as a mere "theory" unworthy of the notice of strong practical common-sense. Otherwise, it is hard to understand the degree to which this almost obvious principle was violated when there seemed to be no necessity for it.

"Equipment in use" presents of course a wholly different series of problems from its "installation". This implies, of course, a wholly different set of "standards" to be observed. The simplest illustration will be that of the power plant. This is a very clearly marked group of equipment, with its own standards of economy and of performance. On this side, analysis is directed to ascertaining the working conditions and demands, such as the amount of power called for in each hour of the day, or the amount of fuel and ash to be handled per hour. Such analyses enable working conditions to be adjusted with much greater accuracy than would otherwise be possible. In the same way a study of the transport equipment performance, as in the case where goods are accumulated at a receiving point, and cleared from there at stated hours, may show the way to distribution of the labor force so as to eliminate waiting about and idleness.

A close study of the standards possible to observe in the operation of equipment is frequently of great importance, because the inefficiencies of equipment are difficult to discover. They are easily left unperceived, since they only affect production indirectly, and the cost of this inefficiency is generally merged in a vague total of "burden", and so escapes scrutiny.

The general aim to be observed in the operation of equipment is that of even, uniform service. It is just the occurrence of uneven, broken conditions of equipment service that pull down the efficiency of a plant almost unnoticed. Analysis of all conditions tending to interrupt service should therefore be made and sufficient inspection assigned, or other measures taken that will prevent such interruptions. The time to remedy a breakdown is before it happens.

"Design" and "equipment" are both, in one sense, preliminary "functions". The one specifies the intention, the other provides the physical means. We must now consider the plant in action; and the "coördinating function" that sets it in motion, and keeps it going is that of "control". This is also a double-barrelled function, inasmuch as it has to be planned and established (installation) and also observed in action, or from its administrative side. It is the function concerned with duties and responsibilities, and the exercise and limitation of initiative. It thus deals with the living factors of management.

The installation of "control" begins by the mapping out of spheres of duties. It therefore plans the interior structure of the various departments that exercise functions. Beyond this it settles the relations between departments and arranges the specially administrative duties, such as ordering, receiving and storing material, receiving customers' orders and dissecting them or passing them to the departments concerned, and arranges for the supervision and coördination of all departments. It does this by planning duties, including the organization of expert advice and assistance where needed.

Analysis will play a large part in settling the details of "control" installation. A quantitative examination of the flow of material and of product will be made, and of customers' orders, and on this the schedule of duties, or spheres of duty, will be determined. Then in regard to the spheres of duty thus set up, there may be a further analysis to determine what particular qualifications are required for each, and the wage or salary that would be appropriate. Then the method of paying for work will be considered, and what duties will arise in connection—such as rate fixers, time-study men, time and pay clerks, etc. In some complex industries, a regular coördinating mechanism is set up, controlling the meeting of orders, designs, instructions, and the movement of material and product correspondingly. This involves a careful analysis of the working capacity of productive plant, and the settlement of a range of spheres of duty to operate this mechanism, or as it is sometimes called "planning department".

On the administrative side, "control" sets everything in motion. The various spheres of duty set up, begin to function. Designs are issued, complete with all their auxiliary instructions as to method. Material is ordered, held in stock, issued and worked on. Product is gathered up, transported from point to point, inspected, perhaps assembled into units, and passed into warehouse, or packed for shipment and shipped. The function of "control" has to do with the performance of these innumerable acts in the right quantity at the right moment. In advanced plants such acts take place in accordance with a pre-determined time-schedule. This implies an ascertained relation between the times of operation as determined by design (see above) and the possible output of the operative or productive equipment. Means must therefore be provided to keep record of each machine (or it may be only of each department) and the amount of work done by it in a given period, and this must be continuously checked with the amount of work coming forward, so the time that a given piece of work will pass through a machine or department can be forecasted with a near approach to accuracy. On this, in turn, hinges the possibility of being sure that material, orders and instructions can meet together at the right moment, so that there is no unnecessary delay owing to the absence of one of these. It also implies a close control over the purchase, storage and issue of material, to the end that nothing may be overlooked so as not to be forthcoming when wanted.

Control at every stage depends for its success on an accurate knowledge of conditions, and these conditions can only be fully grasped, to the degree that makes prevision possible, by the aid of quantitative analysis of every movement taking place in regard to product. The subdivision of duties following on such analysis is sometimes carried very far, as in the case of what is called "functional foremanship". Subdivision of duties is however limited by the necessity for subsequent coördination, and especially by the importance of conserving a point of application of great definiteness for responsibility. While, therefore, the tendency to subdivide duties, if based on a thorough analysis, is a good one, it is not desirable to carry

it too far; and of course there is no super-eminent virtue in any special subdivision, which obviously may fit one plant and class of industry and be wholly inapplicable to others.

The main end of control is to maintain a steady stream of production. Organized control prevents annoying delays and untimely discoveries of forgotten things. It regulates and limits the amount of money locked up in material and in product in process, and particularly it enables promises of delivery to be made with a fair prospect of their being kept—a matter in which the older type of management, in the absence of analytical examination of the field of production, was frequently at fault.

Closely connected with the function of control is that of "comparison". This function has two sides or divisions, one dealing with numbers and values (this is "accounting"), the other with the examination of physical properties (this is "inspection").

Comparison is the great instrument by which control steers its path. Both inspection and accounting depend for their value on standards, actual or implied. For the former, the specifications of design as to size, shape, dimensions and material, form a standard, and in metal manufacturing some of these standards are frequently expressed as "limits and fits". In accounting, a different series of standards is used for comparing with actual results. Thus, the time actually occupied on jobs, as compared with specified or expected time; cost and quantity of material, as compared with specified cost and quantity; actual output, as compared with specified and expected output—all these are examples of the accounting division of comparison.

Comparison is usually associated with the making of "records". No record is of value unless it can be compared with a similar past record, or will be used sometime for comparing with a future record. In large establishments it not infrequently happens that records are prepared month after month that are not compared with anything. In nearly all such cases they may be suppressed, and their cost saved.

The development of comparison as a distinct function is

almost a growth of the past twenty or thirty years. It is only in some industries, and in select plants of even those industries, that it is properly developed even today. This is natural if we regard the modern progress of management as largely a tendency towards quantitative treatment and examination of problems. But, historically speaking, there is another good reason. It will be found in the keener competition that exists today, and is continually increasing. In former times, strict accounting was confined to actual money transactions, mainly because money can be so easily stolen. The progress of a business and the degree to which it was making profits was judged by the bank balance. Indeed, there was no other way to judge it, except at long intervals, since the books could not be closed until after the long and costly process of the annual "stocktaking" had been carried out. And stocktaking was too great a disturbance to be undertaken any more often than could be possibly helped.

One of the important uses of comparison is in connection with "wastes". Careful analysis of the different sources of waste is necessary, and then records are set up to compare the fluctuations between one period and another, and compare these fluctuations again with other figures which may explain them, or indicate causes of fresh loss.

Some accounting records do not, at first sight, seem to give rise to comparison. Ordinary ledger accounts obviously do, since they maintain a continuous record of what has gone in, compared with what has come out, in regard to any class of transaction. Accounting, in its broadest sense, is the practical application of the science of measurement of quantities and values. But in manufacturing operations the units with which accounting has to deal are, for the most part, complex units. Thus the cost of a job is built up of a number of units, each of which contains several elements. The first is time; the second is a wage rate multiplied by this time; the third is a "burden" distribution, generally also based on time, though it may also be based on the amount of wages. There may be, in advanced accounting, another element, not based on time, but based on the amount of "burden" appropriated to the job. (Supple-

mentary rate.) Not all of these elements are required for comparison in themselves; but they have to be collected and worked up for the sake of being incorporated in a result that is the subject of a comparison.

Analytical methods play a large part in determining the appropriate distribution of burden or expense in many cases. There is no subject more neglected by practical manufacturers than this, principally because the methods that have been employed in the past are very easy to apply, though frequently they give most erroneous results. They continue to be used because the erroneous nature of the results cannot be detected and isolated, save by substituting a more accurate method. They exert, of course, a strong influence on profit, because prices are very often fixed by them, without anyone being cognisant of the error. The error may be on the right side or on the wrong side, but unless something happens to demonstrate the fact, the resulting loss or gain is hidden in the general result of the business operations. Analytical methods of burden distribution would sometimes disclose that particular lines, thought to be money-makers, were being carried on at a small margin of profit, or even at a loss, while other lines supposed to be of small value were really the staple of the business.

The final function is that of "operation". Operation is the act of applying labor and machinery to material so as to transform it in accordance with the dictates of design. But the two functions are obviously distinct. Design, as defined above, effects no transformation. It alters nothing. It merely specifies intention, and nothing beyond. On the other hand "operation" is the function that transforms material. It effects changes in its status—either in form, dimension or composition—but it does not give rise to new intention; that is, it does not design anything.

It is true that, as we have seen, design sometimes specifies with great minuteness every step that operation is to take. It tells "which way". But telling "which way" is not doing the work. Operation does the work—and it may do it well or ill, however minutely the steps have been specified. This distinction is important, because there is a tendency in some quarters

to confuse the sphere of the two functions. That portion of design which concerns itself with the method of operation has been in some cases rather overdone. The idea of giving the operative copious "written instructions" has been made into a fetish, without its true bearing being altogether clearly perceived. The necessity for "written instructions" (which was first discovered in the engineering industries) arises chiefly from one of two causes: Either the machines used are "universal", that is, have endless combinations of ways in which they can be set up and used (machine tools are of this class); or, the degree of operative skill—the operative tradition—is not very high. In a few cases both these causes may be at work.

In the former case, the thinking out of the details of operation in advance is a most important act of design. It enables operation to proceed with assured swiftness, and keeps the machines busy, instead of their being held up while experiments are being tried out. It is no reflection on the skill of the operative, so long as the instructions do not descend to trifling and unimportant details. The excuse for and value of "written instructions" under such circumstances are that, as has been contended in this paper, such instructions are a part of the complete design of the individual piece. They cannot be reduced to any new practice, they cannot form or assist in forming any new operative tradition, because they are essentially confined to one piece, which may or may not ever be made again.

In the other case, namely, where such instructions are necessary from the defective experience or skill of the operative, no such value belongs to "written instructions". In this case, they are not part of design, but an attempt at educating and training operatives. Under such circumstances "written instructions", if necessary at all, are obviously a merely temporary measure. As soon as the standard practice they inculcate has been absorbed by the operatives and has become habit, then "written instructions" become mere red tape.

This distinction would not have arisen had it not been for the fact that most of the modern ideas of management have

been developed in engineering works and machine shops, which form the most complex kind of industry, dealing as they do with machines of very universal application, and with a great variety of operations amounting, in many cases, to distinct trades. Hence, as the new analytical instruments of time- and motion-study came to be applied, wholly new practice was found advisable in many directions. Some of the new practice was intimately connected with individual pieces, and some with general operative practice. Under the circumstances, it is not surprising that "written instructions" were considered to be the method applicable to both these conditions, whereas, had the development taken place in an industry where machines had fixed duty, it would have been obvious that what was wanted was to train operatives in the newly discovered practice, and this would probably have been done with a very small development of written instructions.

This brief review of the five functions and the extent to which modern methods of analysis have penetrated them may be summarized as follows:

1. Design originates.
2. Equipment provides physical conditions.
3. Control specifies duties and gives orders.
4. Comparison measures, records and compares.
5. Operation makes.

The importance of this classification of functions is that each of them has a separate efficiency of its own. In this respect each forms a water-tight compartment. If design is inefficient all the operative efficiency in the world will not help. Excellent equipment service may exist alongside poor operation. All three of these functions may be excellently run, and yet inefficiency in control will not thereby be remedied. If comparison be undeveloped, speeding up operation or modifying equipment will not help to throw light on what is going on. The practical importance of this is very great. In a failing business, diagnosis must first be applied to decide in which function the fault lies; and if in more than one, then the remedies to be applied must be taken in a certain order, or more harm than good will result. For example, where control is

already undeveloped and strained to the breaking point, the speeding up of operation might easily be the last straw which would break down the entire organization and throw it into hopeless confusion. Some of the failures that have been met with in applying the new ideas have in all probability been due to applying them to the wrong function at the outset.

In addition to these five functions, there are certain fundamental laws of action or "effort" that lie behind all management. Space does not permit of their being discussed on this occasion, but they may be briefly enumerated as follows:

First law of effort

Experience must be systematically accumulated, standardized and applied.

Second law of effort

Effort must be economically regulated in four ways

1. It must be divided.
2. It must be coördinated.
3. It must be conserved.
4. It must be remunerated.

Third law of effort

Personal effectiveness must be promoted (six ways)—

1. Good physical conditions and environment must be maintained.
2. The vocation, task or duty should be analyzed to determine the special human faculty concerned.
3. Tests should be applied to determine in what degree candidates possess this faculty.
4. Habit should be formed on standardized bases, old or new.
5. *Esprit de corps* must be fostered.
6. Incentive must be proportioned to effort expected.

In regard to these laws of effort, it may be said that while they have always been implied in manufacturing activity of every kind, most of them have only recently become revealed to the consciousness of managers. Taking the first law: it is obvious that experience has always been, more or less, the basis

of action, but the systematic gathering of all experience available, and its standardization, must be regarded as a very modern development. In former times, indeed, the practice was all the other way about. Men refused to exchange experience and guarded jealously every little advance they made, as a trade secret of the direst importance. This attitude is not yet dead; but in proportion as industry takes on a scientific character, it is rapidly fading. It is beginning to be realized that the exchange of experience and data of all kinds is far more important to both the individual and the industry than any private cornering of ideas can possibly be.

The division of effort has, at least since the days of Adam Smith, been recognized as the foundation of the industrial system. But in proportion as the division is carried further and further, the necessity for coördination of the divided threads becomes more pressing. Coördination may be defined as the avoidance of "gap and overlap". In modern factory organization it has assumed immense importance. The conservation of effort as an end to be consciously sought out is both an old practice and a new departure. At the outset of the factory system it was studied in a fashion that was both minute and far-reaching. The famous mathematician, Charles Babbage, described some of the methods and their results as far back as 1832. But in the intervening years the vast development of industry and the necessity to produce quickly, rather than with minute economy, apparently led to the abandonment of these analytical methods until their re-discovery and re-application by the late Frederick W. Taylor. Modern practice demands that every stage of effort, not only as regards operation, but also in other functions, be conserved to the utmost, so that the maximum effect may be forthcoming from a given expenditure of energy. The remuneration of effort, in this connection (that of the second law), has reference to the discovery by analytical methods of the special type of efficiency that must be rewarded in each class of work. Thus, in some work exactness, in other, punctuality, inventive faculty, or initiative may be the proper basis for special remuneration. This division of the second law is as yet not very far advanced in application.

The two laws of effort just described have to do with effort in the abstract; the third law has to do with the individuals who put forth the effort. The general tendency of the law is much like the attitude of a good gardener, inasmuch as it deals with the cultivation of individual effectiveness, as the gardener deals with the conditions efficient for the raising of fine plants.

This also is largely of modern development. In the beginning of the factory system it was not only wholly ignored, but would have been looked on almost as a heresy. The days of *laisser faire* and unbridled individualism had no place for any such "sentimental" doctrines. It was strictly up to the individual to make the best of the situation. If conditions were bad, so much the worse for the individual.

This doctrine is now exploded—not for, or not only for, sentimental reasons. Neglect to promote personal effectiveness of those he employs is found to be bad business by the employer. Hence the third law of effort is now firmly established.

The first subdivision of the law indicates the necessity for good physical conditions and environment for all workers. This implies that light, air, quiet, safety, and wholesomeness in reasonable degree, according to the nature of the work to be performed, are to be looked on as essential to efficiency. In reasonable, rather than absolute, degree, because necessarily the standard for one occupation is not that for another. But all avoidable departures from these standards are to be eliminated. The principle regards the human organism in relation to its reaction to the environment, and no psychological principle is better established both theoretically and practically. Hence arises the necessity for ensuring that the environment is as satisfactory as it can possibly be made, having in view the nature of the work to be done.

The second and third subdivisions of this law are very new indeed. The idea of vocational fitness is hardly yet familiar. Its general idea may be found in the application of tests to determine color-blindness in the case of mariners and locomotive engineers. This is, of course, a very elementary case, but application of the law is in course of expansion at the present time. Certain occupations are found to call for certain physi-

cal and psychical qualifications, such as memory, calculation, self-reliance, personal strength, quick reaction, inflexibility, etc. The desirability of determining these qualifications for any post, and then of selecting the candidates by tests that demonstrate their possession of these qualities is obviously very desirable, in as far as it can be done in practice. It would prevent misfits and exclude the square pegs from the round holes, without the humiliating experience of failure. It would, conversely, steer the candidates towards the occupations for which they were best fitted. Not a great deal has been accomplished in this direction as yet, though the field is a promising one. Unfortunately in a region so subtle and uncharted as human faculty, the opportunity of the quack occurs. Some of the theories put forward in this field are as preposterous as the claims of the old-time phrenologists, which indeed they are based upon. Much time must elapse, and much examination of the subject by competent and trained investigators working with a scientific and not a money-making end immediately in view is necessary, before any practical assistance can be obtained from these new tendencies.

The fourth subdivision of the third law of effort suggests the importance of correct habit. This is a very promising field. Habit should be formed, that is, consciously formed, on standardized bases. These bases are not necessarily new. Thus, punctuality is such a standard, but of course has always been recognized as important. We may consider, however, the case of industrial and, particularly, operative habit which is being disturbed and reformed by the application of time- and motion-study to existing practice. Habit cannot be changed in a moment. As Mr. James Hartness has pointed out "habit possesses inertia". Therefore, in introducing new practice it must be done gradually, that is, by instalments, allowing time for each successive instalment to overcome inertia, to displace old habit and finally to become established as new habit.

The fifth subdivision deals with the formation of *esprit de corps*. This is not the same thing as team work, though it sometimes includes it. The nearest English equivalent to the phrase may be found in "group pride". The man who believes in his

group will exert himself for its welfare beyond the strict letter of his bond. Belief in the purpose for which the group exists is the first essential, and in industrial affairs this means belief in the firm, in its product, in its superiority to other firms in the same line. Naturally, this condition of mind cannot be brought about by any mechanism. It must grow out of the environment, out of a sense of confidence in the justice meted out to all and sundry, out of fairness and pleasant relations with all the individuals to be associated with. Some attempt is made by firms with large selling staffs to furnish such information as will create enthusiasm for the product and for the work of selling it, but very little progress has been made to extend this idea to the manufacturing force also. In some cases it could be done with excellent results, and whatever lends interest to the daily work, and reveals that it has an importance in the world at large, will certainly assist in developing group pride. Neither can coöperation be considered as an equivalent to *esprit de corps.* It is sometimes claimed that this or that system of management gives rise to a spirit of coöperation. But to speak of a spirit of coöperation is something of a misnomer. Coöperation is not an end of itself; it is a result of something. Men will not coöperate for the sake of coöperating, or because they are told it is a fine thing to do. They will coöperate if their attention is focussed on a definite end, and this end may be an indefinite and intangible one, like the honor of the regiment or the credit of the plant. In fact, the more intangible the end, so long as it contains a definite principle, the better. This, however, is *esprit de corps*—a larger issue that controls the will of men unconsciously. Wherever it can be developed it is an asset of the highest value.

The final subdivision of the third law of effort states that incentive must be proportioned to effort expected. This is a vast subject and would take another paper to do it justice. The various rival systems of management that have been put forward in recent years have for the most part some special method of payment by results as their foundation. The different methods are generally divided into piecework, premium and bonus. Among all these various systems there is a strong family likeness, and the difference between them is not so great as many per-

sons have been disposed to think. They attain closely related results by rather similar paths. The difference between them resolves itself for the most part into the shifting backward and forward of time-limits, allowances and tasks, and the greater or less share that is retained by the employer or given to the man at various degrees of attainment. It must not be forgotten that the modern systems have been accompanied by a large use of analysis (time- and motion-study) which gives them precision far beyond what was attainable under any system a decade or so ago. But the use of such analysis need not be confined to bonus systems; it could equally well be applied to setting piecework rates. Under such circumstances, I do not believe that any one system would be found to have great advantage over another. Probably each of them might be applied to certain special conditions with greater success than another, but that is a different matter from a universal superiority.

The present condition of the science or art of management is one of assimilation and digestion rather than of active change. After a period of discovery and invention has come a period of application and modification. This is likely to continue for some time. The high tide of excitement and enthusiasm caused by the introduction of analytical methods has receded, and a more dispassionate view of the situation is being taken generally. It is beginning to be realized that, just as a study of military science does not produce great generals, so a knowledge of the science of management, inasfar as it can be called a science at the present stage of its development, will not produce great managers. The man has to bring something to the study in each case. A knowledge of mechanisms and of principles is of the greatest value, but the competent manager, like the great general, is born and not made. In all cases where men are associated together for a common end, the influence of personality is enormous, and there is no mechanical substitute for it. The elusive element, "capacity", yields to no analysis, and the synthetic influence of a strong personality must remain, as in the past, the great indispensible factor in industrial management.

DISCUSSION

Mr. Holaday. **Mr. Fred M. Holaday*** said he would like to have some discussion of the measurement of the human element and to know if the science of phrenology is of any use.

Mr. Duncan. **Mr. L. Duncan,†** Mem. Am. Soc. M. E., said that in connection with the question of workingmen's psychology, many firms are establishing employment bureaus, endeavoring to fit men to the job. It is an economic crime to put a man in a place he is not fit to fill. Phrenology will indicate what class of work a man is best suited for. A lady, Dr. Blackford, has done much in this line and conducts a correspondence school, teaching how to select the right people for a given job.

Mr. Dickie. **Mr. Geo. W. Dickie,‡** Vice-Pres., Am. Soc. M. E., remarked that the human element is a very large factor in all management. Its control has never been figured out by any known process. There is no place for so-called scientific management. The introduction of a new line of men who make cards for workmen to fill out, places a barrier between the designer and the workman.

Mr. Church. **Mr. A. Hamilton Church,** in closing, said that attempts to resuscitate the so-called science of phrenology should be viewed with the gravest reserve. The judgment of scientific men in the matter is well represented by the following words of Professor Alexander Macalister, F. R. S., in the latest edition of the Encyclopaedia Britannica (Art. Phrenology). "Psychology, physiology and experience alike contribute to discredit the practical working of the system, and to show how worthless such diagnoses of character really are . . . it is capable of doing positive social harm, as in its proposed application to the discrimination or selection of subordinate officials".

The pioneer in applied psychology (which must be carefully distinguished from phrenology), Professor Muensterberg, of Harvard, has also issued warnings as to the danger of premature attempts to apply cut and dried rules and formulas for the determination of vocational fitness. Only exhaustive research by trained psychologists applied to particular and definite problems can delimit either the qualifications required for any task or the data on which candidates for such work can be accepted or rejected. The whole subject is in its infancy, and though of great promise, the most intolerable injustice would result from premature and unintelligent attempts to apply it practically at the present time.

---

* Mechanical Engineer, Oakland, Calif.

† Mech. Engr., Nevada Cons. Copper Co., McGill, Nev.

‡ Naval Arch., San Francisco, Calif.

Paper No. 239

MOTION STUDY AND TIME STUDY INSTRUMENTS OF PRECISION.

By

FRANK B. GILBRETH, Mem. Am. Soc. M. E.
and
LILLIAN MOLLER GILBRETH, Ph. D.
Providence, R. I., U. S. A.

The greatest waste in the world comes from needless, ill-directed, and ineffective motions. These motions are unnecessary and preventable. Their existence in the past was excusable, because there was no knowledge of how to dispense with them. That excuse no longer obtains. The methods and devices of waste elimination are known and are being constantly used. But the knowledge of how to make these great world-wide economies is being disseminated at an astonishingly slow speed.

This paper is for the purpose of disseminating such knowledge, particularly as to the devices that are used for making the measurements that enable us to eliminate waste.

In the science of management, as in all other sciences, progress that is to be definite and lasting depends upon the accuracy of the measurements that are made. There are three elements to every measurement:

1. The unit measured.
2. The method of measurement.
3. The device by which the measurement is made.

It is here our aim to show the development of the devices of measurement, that is, of instruments of precision that apply to one branch of the new type of management, namely, to motion study and its related time study.

The fundamental idea of the new type of management that has been variously called "Scientific Management", or "Meas-

ured Functional Management", is that it is based upon the results of accurate measurement. This fundamental idea has been derived as follows: Each operation to be studied is analyzed into the most elementary units possible. These units are accurately measured, and, as the results of the measurement, the efficient units only are combined into a new method of performing the work that is worthy to become a standard.

Dr. Taylor, the great pioneer in time study, and his coworker, Mr. S. E. Thompson, have clearly defined their conception of time study as "the process of analyzing an operation into its elementary operations, and observing the time required to perform them". Time study has to do, then, fundamentally, with the measurement of units.

Now motion study has to do with the selection, invention, and substitution of the motions and their variables that are to be measured. Both accurate time study and motion study require instruments of precision that will record mechanically, with the least possible interference from the human element, in permanent form, exactly what motions and results occur. For permanent use the records must be so definite, distinct, and simple that they may be easily and immediately used, and lose none of their value or helpfulness when old, forgotten, or not personally experienced by their user.

There have undoubtedly been some vague motion studies and guess-work time studies made as far back as historical records are available, particularly in the arts of warfare. The importance of rhythm, for example, which is one of the fundamentals in motion study, was recognized in the Assyrian and Babylonian pictorial records which perpetuate the methods of their best managers, as examination of photographs of such records in our possession will plainly show. Babbage, Coulomb, Adam Smith,—all recognized the importance of the time element in industrial operations, for the purpose of obtaining methods of greatest output, but not methods of least waste. It was not, however, until Dr. Taylor suggested timing the work periods separately from the rest periods that the managers tried to find accurate time-measuring devices.

It is not always recognized that some preliminary motion study and time study can be done without the aid of any accurate devices. It is even less often recognized that such work, when

most successful, is usually done by one thoroughly conversant with, and skilled in, the use of the most accurate devices. In other words, it is usually advisable in studying an operation to make all possible improvements in the motions used and to comply broadly with the laws of motion study before recording the operation, except for the preliminary record that serves to show the state of the art from which the investigation started. However, in order to make a great and lasting success of this work, one must have studied motions and measured them until his eye can follow paths of motions and judge lengths of motions, and his timing sense, aided by silent rhythmic counting, can estimate times of motions with surprising accuracy. Sight, hearing, touch, and kinesthetic sensations must all be keenly developed. With this training and equipment, a motion- and time-study expert can obtain preliminary results without devices, that, to the untrained or the uninformed, seem little short of astounding. When the operation has received its preliminary revision and is ready for the accurate measurements that lead to actual standardization and the teaching that follows, devices of precise measurement become imperative for methods of least waste that will stand the test of time.

Early workers in time study made use of such well-known devices as the clock, the watch, the stop-watch, and various types of stop-watches attached to a specially constructed board or imitation book. Through the use of these it became possible to record short intervals of time, subject, of course, always to the personal error. The objection to the use of these methods and devices is their variation from accuracy, due to the human element. This is especially true of the use of the stop-watch, where the reaction time of the observer is an element constantly affecting the accuracy of the records. But the greatest loss and defect of personally observed and recorded times is that they do not show the attending conditions of the varying surroundings, equipment and tools that cause the differences in the time records, and give no clue to causes of shortest or quickest times.

As for motion study, Marey, with no thought of motion study in our present use of the term in his mind, developed, as one line of his multitudinous activities, a method of recording paths of motions, but never succeeded in his effort to record direction of motions photographically.

Being unable to find any devices anywhere such as the work of our motion study required, the problem that presented itself, then, to us who needed and desired instruments of precision, applicable to our motion study and to our time study, was to invent, design and construct devices that would overcome lacks in the early and existing methods. It was necessary to dispense with the human element and its attending errors and limitations. We needed devices to record the direction as well as the path or orbits of motions, and to reduce the cost of obtaining all time study and motion study data. These were needed not only from the scientific standpoint, but also from the standpoint of obtaining full co-operation of the mechanics and other workers. Many of these had, as a class, become suspicious of time study taken secretly by those who, they thought, did not know enough about the practical features of the trade to take the time study properly, and could not prove that the times were right after putting them on paper. Here was absolute pioneer work to be done in inventing devices that would record times, paths, and directions of motions simultaneously. With the older time study devices there was no way of recording accurately either the unit timed or the controlling surrounding conditions. The "elementary units" were groups of motions. They were elementary only with relation to the stop-watch, with which it is impossible to record accurately the time of an element of a motion, since it takes two decisions and two motions to press the stop-watch. These "groups of motions" were sometimes described at greater or less length, the accuracy of the description depending upon the power of observation of the recorder and the detail with which the time at his disposal, his willingness and his ability to observe, permitted him to set down his observations.

Through our earliest work in making progress records we recognized the necessity of recording time and conditions accurately and simultaneously, the records being made by dated photographs. This method was particularly applicable in construction work,* where progress pictures taken at frequent intervals present accurate records of the surroundings, equipment and tools that affect records of output of various stages of development.

* See "Concrete System", Engineering News Publishing Co., N. Y.

In making more intensive studies of certain trades, such as shoveling, concrete work, and bricklaying, we found it advantageous to photograph the various positions in which the hands, arms, feet, and other parts of the body involved in the operations were placed, and to record the time taken in moving from one position to another by one method, as related to the time taken in moving from the same first to the same second position by another method.† Our intensive study of bricklaying, which grew out of an appreciation of the unique history, present practice and doubtful future of this trade, led us to a more intensive study of the problems of motion and time study in general.‡ Bricklaying will always be the most interesting of all examples to us, for the reason, among others, that it was the first trade to use the principle of duplicate, interchangeable parts system of construction; had had six thousand years of practice in all countries; and was, therefore, a comparatively finished art, but not a science, when we undertook to change it by means of motion study.

Fortunately, we are now able to use the motion picture camera with our speed clock, and other accessories, as a device for recording elements of motions and their corresponding times, simultaneously. Our latest microchronometer records intervals of time down to any degree of accuracy required. We have made, and used, in our work of motion study investigations of hospital practice and surgery, one that records times to the millionth of an hour. This is designed for extremely accurate work, but can be adjusted to intervals of any length desired, as proves most economical or desirable for the type of work to be investigated.

Having completed our microchronometer, we proceeded as follows: The microchronometer was placed in the photographic field near the operator and his working equipment, and against a cross-sectioned background or in a cross-sectioned field, and at a cross-sectioned work bench or table. The operator then performed the operation according to the prescribed method, while the motion-picture camera recorded the various stages of the operation and the position of the hand on the microchronometer, simultaneously. Thus, on the motion picture film we obtain in-

† See "Motion Study", D. Van Nostrand Co., New York City.

‡ See "Bricklaying System", Myron C. Clark Publishing Co., Chicago.

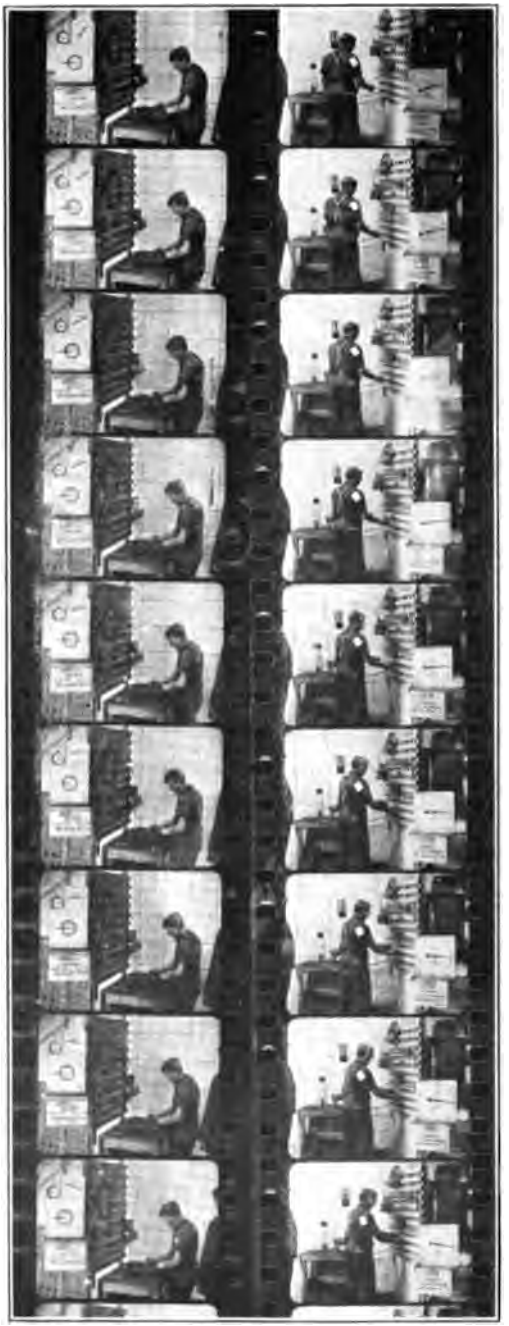

Fig. 1. Fig. 2.

Figs. 1 and 2. Micromotion Studies of Assembly. Note the microchronometer, also the cross-sectioned assembly packet and the specially constructed assembly table.

termittent records of the paths, the lengths, the directions, and the speeds of the motions, or the times accompanying the motions, these records all being simultaneous; and the details of the conditions of the surroundings that are visible to the eye are recorded without the failings of memory. This was a distinct step in advance, but we realized that there was a lack in the records. It was difficult, even for one especially trained and experienced, to visualize the exact path of a motion, and it was not possible to measure the length with precision from the observations of the motion picture film alone, as there is no summary or recapitulation of all the motions of a cycle or operation in any one picture. To overcome this lack we invented the cyclegraph method of recording motions. This consists of attaching a small electric light to the hand or other moving part of the person or machine under observation. The motion is recorded on an ordinary photographic film or plate. Upon observing our very first cyclegraph records, we found that we had attained our desire, and that the accurate path taken by the motion stood before us in two dimensions. By taking the photographic record stereoscopically, we were able to see this path in three dimensions, and to obtain what we have called the stereocyclegraph. This showed us the path of the motion in all three dimensions; that is, length, breadth, and depth. It did not, however, contain the time element. This time element is of great importance not only for comparative or "relative" time, but also for exact times. This time element is obtained by putting an interrupter in the light circuit, that causes the light to flash at an even rate at a known number of times per second. This gives a line of time spots in the picture instead of a continuous cyclegraph light line. Counting the light spots tells the time consumed.

The next step was to show the direction of the motions. To do this it was necessary to find the right combination of volts and amperes for the light circuit and the thickness of filament for the lamp, to cause quick lighting and slow extinguishing of the lamp. This right combination makes the light spots pointed on their latest, or forward, ends. The points, thus, like the usual symbol of arrow heads, show the direction. The result was, then, of course, finally, stereochronocyclegraphs showing direction. These act not only as accurate records of the motions and

times, but also serve as admirable teaching devices. Wire models of cyclegraphs and chronocyclegraphs of the paths and the times of motions are now constructed that have a practical educational value besides their importance as scientific records. These

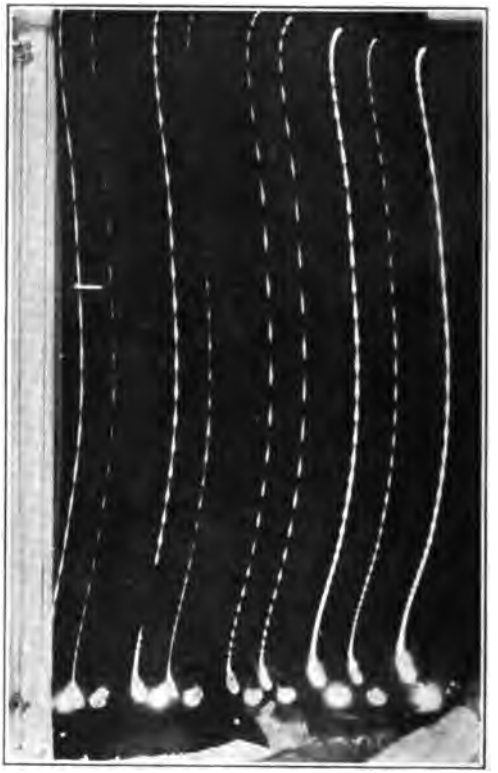

Fig. 3. Typical Cyclegraph Light Lines. Note the possibilities of differentiating various motion paths from one another.

models are particularly useful as a step in teaching visualization of paths by photographs alone, later.

Our latest apparatus in the field of recording devices apparently fulfills all present requirements of the time- and motion-study experts and their assistants and the teachers who are now devoting their lives to the transference of skill and experience from those who have it to those who have not.*

* See "Primer of Scientific Management", D. Van Nostrand Co., N. Y.

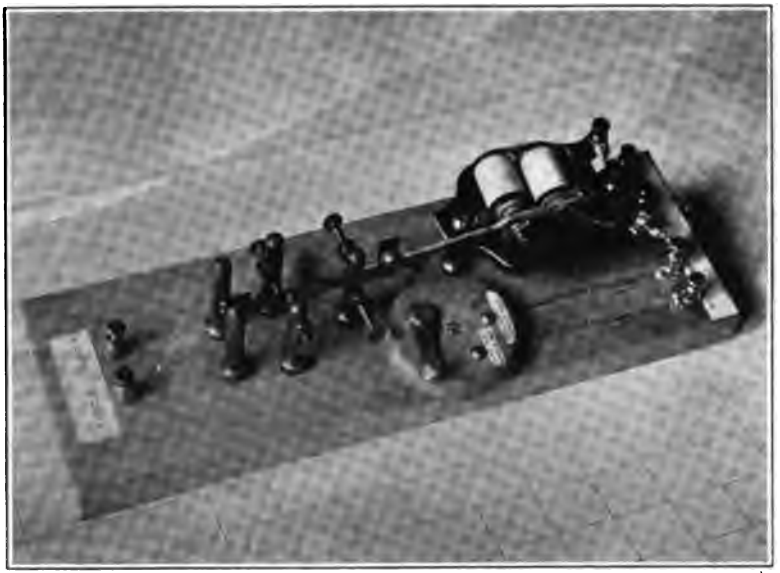

Fig. 4. Type of Chronocyclegraph Apparatus.

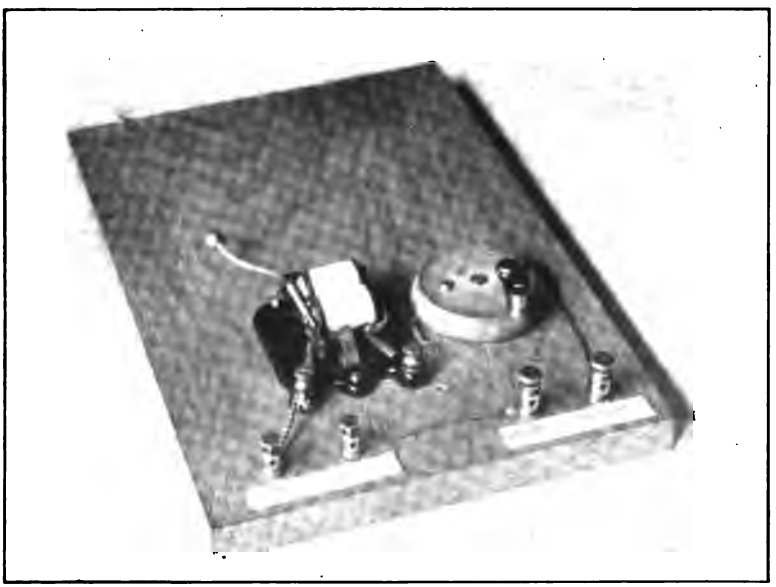

Fig. 5. Type of Chronocyclegraph Apparatus.

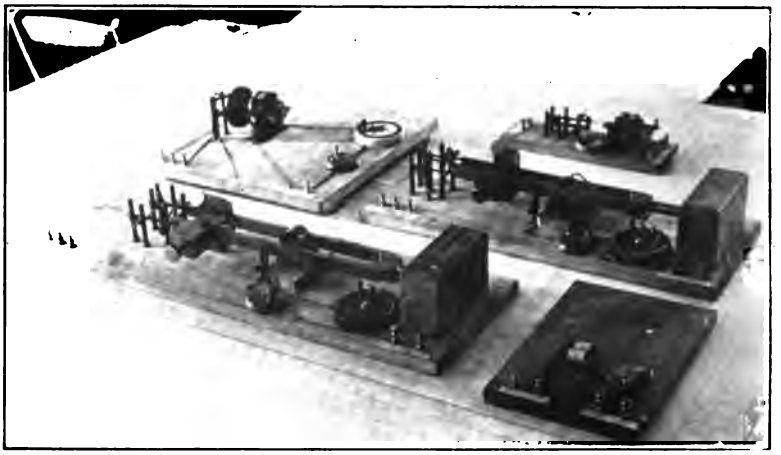

Fig. 6. Type of Chronocyclegraph Apparatus.

We have also devised and used many special kinds of apparatus; for example, devices for recording absolute continuity of motion paths and times, doing away with the slight gaps in the record that occur between one picture and the next on the cinematograph film, due to the interval of time when the film is moving, to get in place for the next exposure. To overcome this objection we have a double cinematograph, that one part

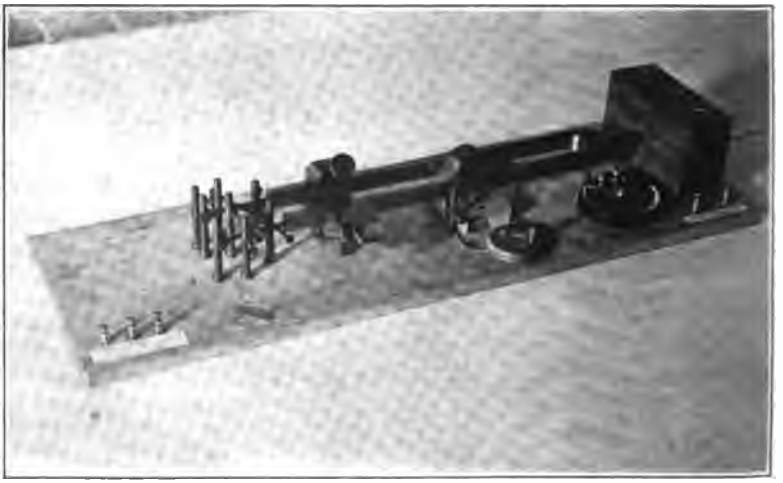

Fig. 7. Type of Chronocyclegraph Apparatus.

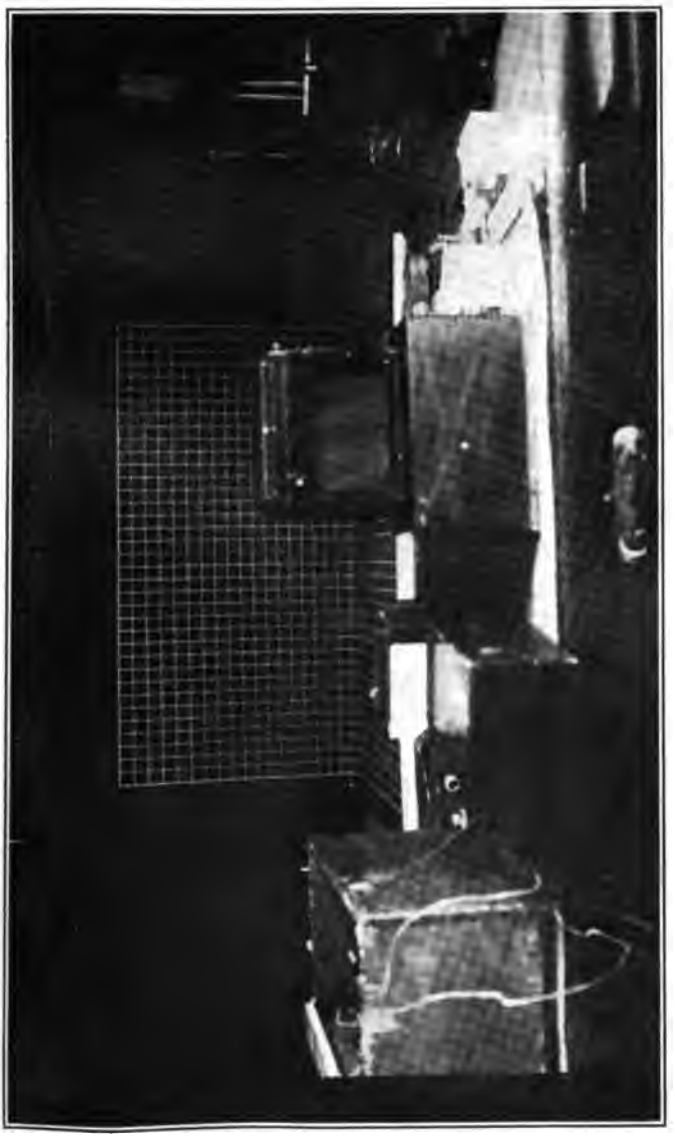

Fig. 8. Type of Chronocyclegraph Apparatus.

may record while the other moves from one exposure to the next. In this way we get a continuous record of the operation. There have been occasional objections to all methods of making time and motion studies that involve the presence of an observer. Some of these have come from those working on what they consider their own secret processes, who object to having any observer record what they are doing, believing that the time study man is obtaining knowledge of their skill and giving them no information in return. Others have come from those who have seen or heard "secret time study" and "watch-book time study", and who regard all observers as spies because of general lack of understanding and co-operation; and there are some instances where they are right. For such cases we have designed an auto-micromotion study, which consists of an instantaneous modification of the standard micromotion apparatus, and also the auto-stereochronocyclegraph apparatus. This enables the operator to take accurate time study of himself. He can start the apparatus going and stop it from where he works, with one motion of his finger or his foot. This invention supplies every possible requirement and feature for time and motion study processes, except the help and advice of a properly qualified observer, or the annoyance of having one not fitted by training, experience, or natural qualities to coöperate.

There is not space in this paper for a discussion of the educational features of observations made with these devices, or of their influence upon the new and much needed science of fatigue study, or of their general psychological significance.* It is only necessary to emphasize their adaptability, flexibility, and relation to economy. We have here a complete set of inexpensive, light, durable apparatus, adaptable to any type of work and to any type of observer or self-observation. It consists of systematically assembled units that may be so combined as to meet any possible working condition. Through a specially devised method of using the same motion picture film over and over again, up to sixteen times, and through a careful study of electrical equipment and of various types of time spot interrupters, we have been enabled to cut down the cost of making time and motion study, until now the most accurate type of studies, in-

* See "Fatigue Study", Sturgis & Walton, N. Y.

Fig. 9. Automatic Motion Study with Vertical Penetrating Screen in the Plane of the Motions.

Fig. 10. Micro motion studies recorded on film, a device for reducing cost while retaining accuracy and permanence of the detailed record.

Fig. 11. Autotele Time Study for Recording Motions at a Great Distance and the Position of the Finger of the Microchronometer Less Than Thirty Feet Away.

volving no human equation in the record, can be made at less cost than the far less accurate stop-watch study. This time study and motion study data can be used when it is "cold". No specially gifted observer, combined with the most willing and efficient recorder, can compete with it for observing and recording facts. It does not depend upon a human memory to "give up" its facts. It is usable at any time and forever, after it is once taken. Naturally, the requirements for refinement and the special set-ups to be used in any case must be determined after some study of the case in hand.

There are now available, therefore, instruments of precision fitted to make measurements as fine as the most exact science demands,—economical enough to make both immediate and ultimate savings, and that meet the demands of the most exacting industrial progressive. When the time and motion study is taken with such instruments of precision, there are still other by-products that are of more value than the entire cost of the time and motion studies.*

* See "Time Study; a Factor in the Science of Obtaining Methods of Least Waste".

See "Psychology of Management", Sturgis & Walton, N. Y.

Paper No. 240

THE STATUS OF ENGINEERING IN CHILE.

Submitted by
THE INSTITUTE OF ENGINEERS OF CHILE
Gustavo Lira, Secretary
Santiago, Chile, S. A.

I. ENGINEERING EDUCATION.

Although the Colonial University of San Felipe, founded in Santiago in the middle of the eighteenth century by the kings of Spain, gave, nominally, courses in mathematics, the nature of this institution, rather academic and honorary than teaching, prevents us from counting it of importance in connection with technical instruction.

The first establishment in which instruction was given in engineering or in any of its branches, in the present sense of the word, was the Academy or College of San Luis, founded at the beginning of the nineteenth century by the eminent Chileno don Manuel de Salas, one of the founders of the Republic—a statesman of clear judgment and the first to see that, by reason of its geographical environment, the future of the country would depend on the development of industry and commerce rather than on agriculture, the only activity of those times.

On the creation of the Republic of Chile in 1810, among the most notable early acts, the foundation of the National Institute joined with the abolition of slavery is especially worthy of record. The Institute, thus founded, was the continuation of the Academia of San Luis and of other colleges of the colonial time.

This institute charged with all the instruction, intermediate and superior, of the newly formed nation, prepared, until the middle of the century, all the professional Chileno engineers, whose activities, however, were limited to land surveying and chemical assays.

Various eminent foreigners, such as the Spanish Señor Gorbea, contributed to elevate the standards of scientific culture, giving courses in branches of higher mathematics, physics, chemistry, and astronomy.

In the middle of the nineteenth century, the special activity in the mining industry in Chile, at that time one of the leading producers of silver and copper, and the discovery of beds of coal, gave especial prosperity to the field of mining engineering. This field was chosen in preference by students, who also found instruction in these subjects in the mining schools or lycées of Serena and Copiapo, important mining centers in those days.

The eminent Polish mineralogist, Domeyko, contributed most notably to this work of instruction, founding the first laboratories, in the modern sense, for instruction in these branches.

The creation of the present University of Chile in 1843 soon brought about the concentration of higher education in this institution, leaving for the National Institute and the provincial schools (lycées), the intermediate and secondary instruction, comprising the elementary branches of general knowledge and the humanities.

The course in engineering at the University was gradually developed with branches of civil engineering. Various European professors came to give instruction, first in road-making, then in railway engineering, strength of materials, structural engineering, and hydraulics, but the number of students was in general so small that the organization and development of these studies presented a very irregular course.

Notwithstanding this, the best students of the period were later sent to Europe to complete their studies, and on their return, occupied in giving instruction and in the practice of their profession, they spread abroad a growing taste for these studies.

The best impulse toward a definite organization of engineering education in the University of Chile has been during the past 25 years. The employment of a group of distinguished European engineers, Belgian especially, for giving instruction in these branches and the reorganization of intermediate and

secondary education by a large group of German teachers in conformity with the methods of that country, made possible the further development of the technical courses in all those branches which today constitute the profession of engineering, including mechanical and electrical engineering.

At the close of his secondary studies, the student must pass his examination as a Bachelor in Mathematics, in order to take up the courses of engineering in the University.

Instruction in the latter then begins with the branches of higher mathematics: Descriptive Geometry, Analytical Geometry, Differential and Integral Calculus and Analytical Mechanics, continuing later with branches more directly technical such as: Topography and Geodosy, Machines, Hydraulics, Strength of Materials, Structural Engineering, Railways, Bridges and Roads, Industrial Physics, and Electrical Engineering for civil engineering students, and Analytical Chemistry, Assaying, Metallurgy and Exploitation of Mines for students in mining engineering.

The courses in engineering are given in the buildings of the University, which include laboratories of General and Industrial Physics, Chemistry, Mineralogy and Geology, Electrical Engineering, Mechanical Engineering and Strength of Materials. The latter laboratory, aside from its function in the work of education, also serves the public for the purpose of making tests on constructive materials. The Government also requests certificates from this laboratory before accepting material which is to be employed in the construction of public works.

To the great activity in engineering education which has taken place during the past 20 years (the University of Chile has received students from Bolivia, Ecuador, Colombia, Venezuela and Central America) there has succeeded a period of relative quiet, by reason of the financial condition of the country. Further, the University of Chile has no special endowment, and individual initiative is lacking. However, the number of students has quadrupled in the last 10 years, making evident the necessity of extending the field of operation of the schools of Engineering and of Architecture. The latter school has been in operation since 1898.

The teaching staff has already given evidence of this condition of feeling, and the development of an expression of opinion is under way looking toward the transformation of the University from a mere professional school, which it is today, into a body of scientific institutes which will be centers of special investigations.

Aside from the University of Chile, the Catholic University of Santiago likewise maintains a School of Engineering and Architecture, with programs of study more restricted in their technical foundation, and furthermore with a shorter period of study.

The state also maintains, as institutes of professional instruction: the School of Arts and Trades, intended to train leaders in the branches of the mechanical industries, foundry work, carpentry, etc.; the School for Naval Engineers, which is an annex to the Navy of Chile; the Agricultural Institute, which trains agricultural engineers; and finally two mining schools, intended to train assayers and superintendents of mines.

II. THE ORGANIZATION OF THE DIVISION OF PUBLIC WORKS.

In Chile the Division of Public Works holds a special importance for the reason that the State has undertaken the construction and the operation of a vast network of railroads, of all the roads and bridges, of the harbors, and of nearly all the works for water supply, sewerage, etc.

Already in 1838 the position of Director General of Public Works was created, but the law of 1842 placed this duty in charge of the Society of Civil Engineers, an institution which for many years gave attention almost exclusively to the means of communication—roads and bridges. An Architect's Office occupied itself with the public buildings.

The Division of Public Works, at that time, formed a part of the Ministry of the Interior; but on account of its great development, there was created in 1887 a special Ministry of Industry and Public Works, to which pertain, according to the law of its creation, the opening, preservation, and repair of roads, bridges, paved streets, and waterways; the construction of all national buildings, dams, dikes, moles, light-houses, and of public monuments in conformity with the directions and with the funds furnished by the various governmental depart-

ments; the construction of telegraph and telephone lines belonging to the State; the opening of canals or drainage channels and the drainage of lagoons carried out on account of the State; the making of the "culture" map and other plans or maps of the territory of the Republic.

In 1888 there was created the present Division of Public Works, charged with the study, execution and oversight of all public works which are undertaken in the country for the Government or for private individuals on account of the State. To this office pertain likewise the examination and granting of all exclusive franchises and privileges.

This office is divided into five Bureaus or general inspectorships: Railways, Bridges and Roads, Hydraulics, Architecture, Geography and Mines. Recently funds have been considered for a new Bureau of Irrigation. The laws are very clear regarding these matters, and at first the Division of Public Works was organized in conformity with them. Later, however, other ministries have undertaken directly the construction of certain of their works and have even maintained offices for this purpose.

The Section of Railways (Inspection or Bureau of Railways) is occupied exclusively with making studies and supervising the construction of all the railroad lines which are built for the State, and once completed, this office turns them over to the Office of State Railway Direction for their operation. The latter, which is an organization relatively autonomous, carries on also new construction for its lines.

In regard to private railway lines, these are not under the control of the Division of Public Works. Their construction and operation are subject to the direct oversight of the Ministry which supervises the terms of the concession for construction, the various tariffs, etc., taking into consideration the general national interests, those of the public which uses the road, and those of the State as owner and operator of its own network of roads. A special law passed in 1862 regulates the intervention of the State in these matters.

The statutes regarding municipalities, adopted from the Swiss legislation for autonomous communities, places in their charge the care of roads, at the expense of their own resources,

derived from taxes on property, commercial licenses, etc. But the intervention of politics has interfered with the effective operation of these measures, and in the general interest it has been necessary for the State to render aid, and the Bureau of Bridges and Roads attends to the construction and upkeep of these public roads.

Similar dispositions were made with regard to the services for sewerage and for potable water. The municipalities turned over these matters to private contractors or constructed works deficient with regard to hygienic requirements, and the State, in order to render suitable aid, has raised money by loan for the construction of such works, placing them in charge of the Bureau of Hydraulics, and has undertaken the exploitation until the cost shall be amortized. This operation is placed in charge of the Ministry of the Interior and is carried out through the agency of the technical Bureau of Potable Water and Drainage.

Furthermore, the general Bureau of Hydraulics has occupied itself with the works necessary for protection against and control of floods in the rivers, generally torrential in character, with hydrometric studies, and with the improvement and conservation of the hydraulic resources of the country, and with investigations regarding the opportunities for irrigation.

Finally, for this purpose there has been organized a special section of the General Division of Public Works, and the State has been authorized to construct certain irrigation works to the account of the agriculturists benefited, by means of an internal loan guaranteed by them.

The Ministry of the Treasury, to which pertains the customs service and the management and development of the harbors, has also recently taken under direct control the construction of such works or of the loading facilities, through the agency of a body called the Harbor Commission, constructions which are also carried out by the Bureau of Hydraulics of the General Division of Public Works.

In a similar manner the Ministry of Marine has carried on directly dry docks and repair slips, and even the reclamation of land with sea walls, etc., in military harbors. This ministry is also charged with the light-house service, with beacons, buoys

and hydrography, and maintains offices for the care of all these branches.

The General Bureau of Architecture in the Division of Public Works has in charge the design and construction of all the public buildings of the country, but nevertheless not infrequently the other Ministries construct directly their own buildings. The charitable institutions of the country, in charge of autonomous bodies under the control of the State, build likewise their own edifices, hospitals, etc.

The General Bureau of Geography and Mines of the same Division, has in charge all official surveys of the territory, the reconnaissance of mineral deposits, and the oversight of the conditions of working the same, the making of geological borings and the general mineral map of the Republic.

In the branch of geography, the Ministry of Foreign Relations and Colonization has also maintained during many years, in connection with litigation concerning international boundaries and for the care of matters relating to colonization, an official body called successively Boundary Commission and Survey Office, to which is due the greater part of the present national cartography.

In the branch of mines, there is now manifest a tendency to give it greater importance, raising it to the category of an independent division, or perhaps turning to the former Corps of Mining Engineers, whose functions were attached to the Division of Public Works by the law which created it.

The preparation of the technical staff which is to enter the Division of Public Works comprises the higher university studies as given in the present curriculum. The law which created the Division of Public Works requires for the personnel the degree of Engineer from the University of Chile.

As we have seen, the administration of public works does not have, at the present time, a well-defined organization, by reason of the duplication of function between the various departments of the State. There is lacking, furthermore, a general scheme of public works which, with the authority of law, should determine the rational and methodical manner in which these works should be carried out, which now are done under annual authorization of the budget laws of the Republic, at the

instance of the representatives in the Congress. The Ministry of Public Works in consultation with the Direction of the Division has already formulated a plan which awaits the consideration of the National Congress.

III. PUBLIC WATER SUPPLY.

The first works for the supply of water to the capital of the country date from the close of the sixteenth century, but the first installations which can be considered significant in the modern sense of the term date back only some 50 years. The same is also true of Valparaiso, the first seaport of the Republic.

Today it may be said in general that every city of more than 3000 inhabitants has its water supply system, and there are 66 such cities in the country. All these are state works but are to become the property of the municipalities as soon as the State has been indemnified for its investment in them, or as soon as the loans necessary for their construction have been amortized.

With this end in view, the schedules of charges for water are so calculated as to give a mean annual return of 7%, which is destined for interest on the capital invested and amortization of the same.

The cost of the water per cu. meter varies from $0.02 to $0.12, U. S. gold ($0.0756 to $0.455 per 1000 gals.), according as the water is furnished by simple gravity or mechanical means, the importance of the city, difficulties of supply, etc.

There are also four private installations for water supply, all of these in the harbors of the saltpeter region in the northern part of the country, where water is very scanty and where it has been necessary to bring it, in some cases, from the range of the Andes across the entire country, with 100 to 200 kilometers (62 to 124 miles) of pipe line, or obtain it by the distillation of sea water. All of these belong to various foreign undertakings and operate in conjunction with railway companies, to which they supply the water. The selling price in such cases is much higher, ranging from $0.30 to $0.70 U. S. gold per cu. m. ($1.14 to $2.64 per 1000 gals.).

These high charges and the small supply which is provided, have obliged the Government to initiate also public works in some of these ports. (Tocopilla and Iquique.)

In order to realize low charges, even in small cities, which stimulate the consumption of water and favor cleanliness and good hygiene, especial effort is made to realize the most economical methods, even though the quality of the water may not strictly fulfil all the requirements as to physical properties; however, especial care is taken regarding bacteriological purity.

The method generally adopted is by a drainage channel at some 5 meters (16.4 ft.) depth in the gravel of the nearest rivers. From the relatively steep transverse gradient of the country (1%), it is always possible with some 10 kilometers (6.21 miles) of pipe line to supply a city with a head of 20 to 30 meters (65.6 to 98.4 ft.), even with the highest velocities admissible in the pipe lines.

In other cases, in the coast region or in the south of the country, where the rains are more abundant, recourse is had to the gathering up of small superficial streams, condemning for public use the watershed in order to assure the purity of the water and avoid the cutting of the forests, which would diminish the flow of the water in the summer. These streams involve the inconvenience that on account of the irregular distribution of the rainfall in Chile (the climate is very dry from November to April and very rainy from May to October) the winter season is subject to great floods, which render the waters turbid with clay and vegetable matter, which substances are not satisfactorily removed in the purifying basins.

For the same reasons of economy of installation and service, filters are not employed except in Valparaiso, where there are sand filters with 15,000 sq. m. (161,500 sq. ft.) area.

When in order to find sources of supply with sufficient elevation in relation to the city it would be necessary to employ more than 15 to 20 kilometers (9.3 to 12.4 miles) of pipe line, recourse is had to mechanical pumping, draining the water from the nearest available sources. There are only seven cases of mechanical pumping.

As fuel for these installations, coal or wood is used, costing $10.00 U. S. gold per ton and $0.50 to $1.00 U. S. gold per cubic meter ($1.81 to $3.63 per cord) respectively. In case of larger requirements, use is made of hydraulic power directly or through electric transmission.

Also for economy, use is made of piping of 75 and even 50 mm. diam. (3 and 2 in.) in the distributing network in cities. Fire hydrants, however, are placed only on lines of 100 mm. (4 in.) or more. In large cities, of 40,000 to 60,000 inhabitants, nothing is used smaller than 100 mm. (4 in.) and fire hydrants are placed every 100 to 200 meters (328 to 656 ft.).

The material employed is generally cast iron, of French or, exceptionally, of English manufacture; however, recently, use has been made of Mannesmann steel pipe for main supply lines and even for the distribution system of certain cities. However, the use of this material tends to limit itself sharply to very special cases, such as high pressure, reserving cast metal for use solely in the distributing system. Cast iron pipe in Chile costs about $40.00 U. S. gold per ton and Mannesmann steel about $55.00.

All cities are provided with storage reservoirs of masonry work or of concrete, and recently of reinforced concrete, in two compartments, and located directly on the ground on some elevation adjacent to the city, which is never lacking in so hilly a country. In one case only use is made of a storage tank elevated on columns.

The supply of water provided for is based on an allowance of 100 to 200 liters (26 to 52 gals.) per day per inhabitant of a future population, which is estimated at 1.5 to 2 times the present. The distribution system is, however, capable of carrying an amount even 1.5 times greater yet.

The cost of the work has been from $7.00 to $13.00 U. S. gold per present inhabitant. This figure should be considered in view of the fact that the density of population in most of the cities is 50 to 100 inhabitants per hectare (12,450 to 25,900 per sq. mi.); and that most of the cities being formed of blocks 125 meters square (410 ft.), there is required in the distribution system from 2 to 3 meters (6.56 to 9.84 ft.) per inhabitant.

The most important installations for water supply are those of Iquique, 40,000 inhabitants; Valparaiso, 200,000 inhabitants, and Santiago, 400,000 inhabitants.

In Iquique (under construction) the source of water is the Christanai, in the range of the Andes, at 95 kilometers (59 miles) from Iquique and 1300 m. (4260 ft.) elevation. The supply is

carried in a steel pipe line which is designed for a pressure of 370 m. (1215 ft.). The storage reservoirs are of reinforced concrete, of 8000 cu. m. (282,560 cu. ft.) capacity. The distributing system is of cast iron. The cost of the entire installation amounts to $1,000,000 U. S. gold.

In Valparaiso, with an earthen dam 22 meters (72.2 ft.) high and 500 meters (1640 ft.) long forming a basin of 9000 hectares (34.75 sq. miles), a lake has been formed of 90,000,000 cu. m. (72,980 acre ft.) capacity. This is the only installation in the country which includes filtration of the water. The water is brought to Valparaiso by a closed masonry aqueduct 19 kilometers (11.8 miles) long. The cost of the undertaking has amounted to $6,000,000 U. S. gold.

In the new works under construction for Santiago, the waters of the Manzanito River are taken in the range of the Santiago Mountains at 2500 meters (8200 ft.) altitude and are brought to the city by an aqueduct of concrete with a capacity of 5 cu. m. per sec. (176.6 sec. ft.) and a length of 91 km. (56.5 miles). The storage reservoir has a capacity of 90,000 cu. m. (317,880 cu. ft.). The cost of the undertaking has somewhat exceeded $3,000,000 U. S. gold. As reserve, a development will be made of the waters of Lake Negra, located at the sources of the Manzanito, and which holds 600,000,000 cu. m. (486,600 acre ft.) of water. For this project, the financial situation of the country did not permit of the acceptance of an estimate of $4,200,000 U. S. gold in order to carry out the work in such manner as to secure the development of power in connection with the water supply, and by means of which some 50,000 hp. might have been made available in two central stations situated less than 30 km. (18.6 miles) from Santiago. The question at that time was very widely discussed, but in the end the opinion of the engineers was not followed. According to this opinion the conditions were favorable for the execution of this project, the greater cost of which would be perfectly compensated by the immediate sale of electric power for lighting and traction in the city of Santiago (where now service is rendered partially by hydraulic and heat prime-mover stations), in the electrification of railways and in the elevation of water for the irrigation of land lying along the coast.

IV. SEWERAGE WORKS.

Most of the cities of Chile have a low density of population (50 to 100 per hectare, or 12,450 to 25,900 per sq. mile), so that the larger part of the ground is given over to the cultivation of gardens and orchards, for the irrigation of which there is, in the central zone of the country, a network of small canals which are also utilized for drainage. Only in the extremes, north and south, of the country, where the absolute lack of rain and the excess of rain respectively, exclude such canals, recourse is had to drainage by pits.

In the principal cities, more densely populated (100 to 200 per hectare, or 25,900 to 51,800 per sq. mile), for the most part such systems of drainage channels are not in use, and it has been necessary to have recourse to the installation of modern sewerage systems, first in the large cities (Santiago in 1909 and Valparaiso in 1885) followed later by the smaller cities: Viña del Mar (26,000 inhabitants), Concepcion (60,000 inhabitants), Curice (16,000 inhabitants), Antofagasta (35,000 inhabitants), Serena (18,000 inhabitants), Chillan (32,000 inhabitants), Valdivia (18,000 inhabitants), all now in use; and Talca (40,000 inhabitants), Taltal (12,000 inhabitants), Arica (5,000 inhabitants) and Tocopilla (16,000 inhabitants), under present construction.

Also the State has constructed all these works and will administer the service until the cost has been amortized, when they are to be turned over to the municipalities, with the exception of the systems in Valparaiso and Viña del Mar, which belong to private English companies.

These and the system in Concepcion, built by English contractors, likewise present the peculiarity of using pipe of vitrified clay, while in all the others the piping is of cement, which has given, to the present time, very satisfactory results.

The private companies collected first per service, but now they follow the same plan as the State, which collects a tax of 2 to 3% on the value of each proprietor, no matter what may be the hygienic service.

The low density of population already noted, and its economic influence, necessitate a limitation of the work to the re-

moval of the sewage beyond the inhabited zone, emptying it freely into the sea or into the nearest water-course without previous purification.

The systems installed by private enterprise discharge sewage alone, while the systems installed by the State carry also storm water, generally in the same pipes. Two cities of the south, where the rains reach extreme intensities, have considered separate systems.

Thanks to the considerable gradients shown by the plan of the cities (½ to 1½%), preference is given to continuous flow, the sewer lines being disposed in the form of zigzags. For the continuous flow, water is drawn from old drainage ditches or use is made of sea water in sea coast cities, pumping stations and a separate piping system being installed for this purpose, which latter supplies also water for fire service, thus economizing for domestic use the water of good quality, which is, in general, scarce.

Ventilation is secured by manholes and ventilating pipes in the houses. In two cities only an intercepting sewer has been used.

The cost of these works varies around $10.00 U. S. gold per inhabitant, and rises to twice this figure when it has become necessary to construct a plant for the supply of sea water for flushing the sewers, a fire service, and a service for irrigation and street cleaning. Per hectare of area covered by the system, the cost has been about $1500.00 ($388,500.00 per sq. mile) for systems for drainage alone, and $2000 to $2500 ($518,000 to 647,500 per sq. mile) for systems carrying both storm water and sewage. In exceptional cases in a city the cost has dropped to $1100.00 for this system ($284,900.00 per sq. mile).

The general standards adopted for sewers have been as follows:

Circular pipes, minimum diameter 0.20 m. (7.9 in.), maximum 1.00 m. (39.4 in.). Beyond this limit use is made of ovoid sections.

Minimum depth of pipes 2.50 m. (8.2 ft.).

Minimum velocity of flow 0.75 m. per sec. (2.46 ft. per sec.).

Maximum velocity of flow 2.00 m. per sec. (6.56 ft. per sec.) in pipes; 2.50 m. (8.2 ft.) in main trunks and outfalls.

Minimum depth of water 0.10 m. (4 in.)

The most important and characteristic installations are those of the cities of Santiago and Concepcion.

In Santiago (400,000 inhabitants) the system is of the single type. The designed capacity is planned to be sufficient to safely remove a storm flood of an intensity of 70 liters per hectare per second (1 inch of rain per hour), which according to statistics should not occur more than 10 times in ten years. The plan of the network of pipes is in zigzag, with a total length of 334 km. (208 miles). The system covers an area of 2550 hectares (9.85 sq. miles) and the flow is continuous. The cost of the work was $5,000,000.

In Concepcion (60,000 inhabitants) the systems are partially separate, in that the network receives the rain water from the patios and interior roofs of the houses and operates under gravity for 110 hectares (0.425 sq. mile) and by mechanical pumping (system Shone) for 240 hectares (0.927 sq. mile). The plan of the network is rectangular, and the flow is exclusively intermittent by means of flushing tanks of a minimum capacity of 500 liters (132 gals.). The cost of the work was $900,000.

In Viña del Mar (26,000 inhabitants) the Shone system is also employed.

V. WATERWAYS AND HARBOR IMPROVEMENT.

The form of the country naturally stimulates a large maritime development. It is, in fact, a long band of seacoast of more than 4000 km. (2486 miles) length by only 100 to 200 km. (62 to 124 miles) width and skirted in its lower 1500 km. (932 miles) by a continuous fringe of archipelagos of approximately the same width.

Until the middle of the last century, Chile held relatively the largest maritime development on the continent, but unfortunately the poor natural conditions of most of the harbors—at least in the developed part of the country—and the greater development given since then to the interior railway systems, drew commercial traffic toward the latter and maritime development began to lanquish.

Today a reaction has set in, with the tendency toward a readjustment of the interior railway development in such manner as to give a defined zone of attraction to a series of harbors chosen from among those possessing the best natural conditions or commercial centers already created, and distributed at intervals of 300 to 700 km. (186 to 435 miles) along the coast, reserving the intermediate harbors for the local maritime traffic of the adjacent territory.

The harbor improvement works have been, for this reason, limited to isolated elements—moles and sea-walls or dikes, generally of a provisional character, formed by piling of wood or metal, between which use is very commonly made of old railroad iron, either single or double in form.

By way of illustration of these (with the exception of the masonry dike of Caldera constructed in 1861) mention may be made of the mole for the docking of steamers, built, in 1872, in Valparaiso, of tubular caissons sunk by the aid of compressed air (which was here used for the first time in the world in maritime works), with a wide metal superstructure 235 meters in length by 10 in width (771 ft. by 32.8 ft.); and several similar moles, but of much smaller dimensions, intended for the docking of barges in some of the saltpeter harbors, such as Antofagasta and Tocopilla; and pier walls of masonry in Arica and Iquique. Government storehouses, attached to the customs service, and of which the largest are those of Valparaiso, complement these constructions in various harbors.

Regarding allied works destined for the equipment of terminal ports for the interior railway systems, the first to be equipped was that of Talcahuano. The development here started in works of a military character, a dry dock 200 by 70 by 9 m. (656 by 230 by 29.5 ft.) and adjacent mole of 600 m. (1968 ft.) built in 1890, and supplemented later by a naval repair slip, a second large dock under construction for dreadnaughts, and commercial piers already partially in use and which are being extended greatly with new repair slips of the same character.

Since 1911 there is under construction the port of San Antonio—auxiliary to that of Valparaiso, for bulky cargoes (wood, coal, flour, grain). It comprises 1500 meters (4920 ft.) of moles

which inclose 70 hectares (7,536,000 sq. ft.) of sea, with a minimum depth of water of 10 m. (32.8 ft.); 2000 m. (6560 ft.) of sheds and 400 m. (1312 ft.) of piers, with 30 hectares (3,229,500 sq. ft.) of esplanade for shops and railway tracks. The contract cost amounted to $3,650,000, and it was built by the Franco-Holland Co., Augusto Galtier.

The port of Valparaiso, the most important in the country as to population (200,000 inhabitants) and commercial activity, which exceeds $100,000,000, is surrounded with very difficult natural conditions, and has been the object during many years, of extended study by specialists, such as the Hollander Myn. Kraus, the French M. Guerard, the English Mr. Scott, etc., who have formulated various projects which, however, they were unable to realize.

The works now under construction, contracted for in 1912 with the English firm Pearson and Sons, at a cost of $20,000,000, comprise a mole of 300 m. length (984 ft.), in depths up to 50 m. (164 ft.) on a muddy bottom, and which is to be later extended some 700 m. further (2296 ft.); also 1700 m. (5576 ft.) of pier with docking depth of 12 m. (39.4 ft.) and an area of 10.7 hectares (26.4 acres) reclaimed thereby; a mole for docking steamers, with tubular masonry foundations and upper table or roadway of reinforced concrete 30 m. (98.4 ft.) wide by 200 m. (656 ft.) long.

At the same time plans have been prepared for the great saltpeter port of Antofagasta, whose shipments it is expected will exceed 1,500,000 tons moved, with communication with Bolivia, of which it is one of three present outlets. The cost of these works will amount to $8,000,000 and will comprise a mole of 800 m. (2624 ft.), which will inclose 30 hectares (3,229,500 sq ft.) with a minimum depth of 10 meters (32.8 ft.); 2200 m. (7216 ft.) of pier frontage in them and 40 hectares (4,306,000 sq. ft.) of esplanade for warehouses and railroads.

At the same time a project has been developed for the improvement of the port of Arica, the most direct outlet from Bolivia, by means of a State railroad which starts at La Paz at 450 km. (280 miles) from the sea. The estimate amounts to $7,000,000 and comprises 1400 m. (4592 ft.) in moles, which will inclose some 50 hectares (5,382,500 sq. ft.), with 1000 m. (3280

ft.) of pier frontage and 20 hectares (2,153,000 sq. ft.) of esplanades.

The other intermediate ports either have better natural conditions which permit the omission of the construction of protecting works, or they correspond to a less intensive traffic or to a small local zone which can be adequately served by temporary or simple harbor facilities.

The law of 1910, which authorized the construction of the ports of Valparaiso and San Antonio, provided that a special commission, called from that time the Harbor Commission, should formulate within a period of two years' time a general plan for the improvement of twenty of the principal harbors of the country. This plan, accompanied by the final projects for several of these ports, is now awaiting the consideration of the Government and of the National Congress.

Commercial waterways are relatively limited in extent and importance in Chile by reason of the conditions already noted regarding the excessive transverse slope of the country from the mountains to the Pacific. Only in the southern part, the lower altitude of the mountains and the greater abundance of rain combine to assure certain streams navigable for boats of small displacement; but even in these, as in the numerous lakes which characterize this region, the commerce by boat is limited to local traffic and has been continuously displaced by the construction of railroads as the development of this even now little known country has been carried forward.

VI. IRRIGATION WORKS.

The area of Chile exceeds 750,000 sq. km. (289,575 sq. mi.), of which the distribution with regard to agricultural opportunity may be estimated as follows:

Irrigable land, 20,000 km² (7722 sq. mi.).
Arid land, 100,000 km² (38,610 sq. mi.).
Forest land, 200,000 km² (77,220 sq. mi.).

The remainder, amounting to more than 400,000 km² (154,440 sq. mi.), consists of sterile lands, among which are those which contain the vast mineral and saltpeter deposits and the steep mountain systems of the Andes.

This vast territory extends in a narrow strip for more than 4000 km. (2486 miles) between parallels 17° and 56° of south latitude, in consequence of which it partakes of the most diverse characteristics of climate; and the depths of rainfall which determine agricultural opportunity vary from nothing in the north and to about latitude 23°, increasing to 3000 mm. (120 in.) in latitude 40° to 45°, and then decreasing somewhat still farther to the south.

The distribution of these rains through the year is highly unfavorable, because, even in agricultural regions, with a total annual rainfall of 500 to 700 mm. (20 to 28 in.) the summer is dry and the rains are concentrated during the winter months. In the central region, that of most intense cultivation, on an average rainfall of 350 mm. (14 in.) the quantity which falls between September and April does not exceed 50 mm. (2 in.), while on the other hand the winters are so rainy that in a single month in Santiago there have been rainfalls greater than the above mean for a year, and in a single day it has rained more than in any other previous year.

The range of the Andes, which limits the country on the east throughout its entire length, partakes of the same variation in climate, but with larger and more reliable precipitation of rain or snow. Even in the extreme north, where rain never falls on the coast, the mountain ranges are visited by tropical rains in summer and by snows. By reason of their great height and broken, irregular formation, they constitute an immense reservoir of water which is stored in the form of eternal ice, underground water, etc., which furnish to the country lying below them permanent streams of water which make possible, by irrigation, some compensation for the lack of seasonal rains.

The torrential character of most of these streams requires regulating works for the best utilization of their waters,which would otherwise be wasted, with serious danger in the great floods produced by the rains of winter and in the extremely violent floods at the beginning of summer, occasioned by repeated thawing in the central region and by thawing and tropical summer rains in the northern region. Low water occurs in autumn in the central region and reaches, at times, a flow not exceeding one percent of the winter flow, and in consequence, in the north-

ern region of the country, the water is totally consumed before it reaches the lower valleys; and even if it does succeed in reaching the coast, its usefulness is more limited by reason of its decreased elevation above the land.

In the central region (Lat. 33°-37°) there are more than 10 rivers with flow exceeding 20 cu. m. per sec. (706 sec. ft.) and gradients exceeding 2% in the 50 km. (31 miles) through the mountain and foothill region. The gradients are less in the vicinity of the sea, where, instead, larger and more persistent stream flows are found as the result of infiltration in the wide plains.

Farther to the south (Lat. 37°-45°) the rivers show gradients less than those noted above, but in exchange realize discharges of 100 to 500 cu. m. per sec. (3532 to 17,660 sec. ft.).

In this entire region canals are more readily constructed by reason of the greater abundance of natural water.

The coastal region, constituted by a chain of mountains parallel to the Andes but much lower and less abrupt, with valleys and rolling hills, is situated, on the other hand, in conditions more precarious as regards irrigation. Although the climate of this region is more favorable to dry farming by reason of the persistent humidity of the atmosphere and the greater precipitation of rain in comparison with the neighboring region to the east, on the other hand its elevation above the plain below, in which the rivers run, renders irrigation impossible by means of these waters and has made recourse to storage reservoirs necessary. Such are easily built in these mountains, but are of capacities limited by the extent of the water sheds tributary.

A few attempts, however, have been made to elevate the water by means of hydro-electric motive power or by steam or producer gas, using as fuel the abundant supply of wood, even in this region, although day by day the supply is decreasing by reason of the demand for use in the cities.

This elevation of water, and in spite of the electrical transmission lines required, 100 km. (62 mi.) and more in length, will in the future and later for metallurgical uses, certainly form one of the greatest consumers of electric energy which may be generated by the rivers in the region of the Andes.

There has, thus far, been no serious attempt looking toward the utilization of underground waters, with the exception of small supplies for industrial or municipal use, especially in the northern part of the country, where, for example, the manufacture of saltpeter requires considerable quantities of water for use as a solvent, which added to the consumption of the operatives in the factories, represents a very considerable demand in a region so poorly supplied with this element.

The preceding conditions, taken in relation with the meteorology and configuration of the country, show the need which the agriculturist has experienced of turning to irrigation as a means of compensation for the noted deficiencies in water supply.

During the past century these irrigation works have been undertaken entirely under private enterprise, since the time when the State undertook, in agricultural matters, the first great work of this character, the Maipo Canal built in the early part of the nineteenth century at the beginning of the life of the Republic, for the irrigation of the vast plain, today so fertile, which surrounds the capital of Chile, and which was at that time a stony plain entirely infertile. This great work, model for all the work which has since been undertaken by the private enterprise of agriculturalists, comprises a network of main canals, 60 km. (37 mi.) in length with a capacity at the head of 60 m^3 per sec. (2120 sec. ft.). The zone supplied by these canals exceeds 40,000 hectares (99,000 acres) and they are extended back toward the north of the capital, crossing under the River Mapocho by means of a siphon 90 m. (295 ft.) in length. Aside from numerous water-powers which it supplies for the most varied industries, there is generated at 15 km. (9.3 mi.) from Santiago a power of 10,000 kw., which is transmitted over a three-phase 12,000-volt line for the supply of power for electric light and electric traction in the capital. The company which owns the power station pays to the canal company, for the water supplied, a charge varying around $8000 per year ($1.13 per 1,000,000 cu. ft.) or approximately $0.0002 per kw. generated.

Aside from this Maipo Canal system, there are hundreds of private canals owned by individuals or companies, many of which comprise lengths of main canal exceeding 100 km. (62 mi.) and quantities of flow in excess of 10 m^3 per sec. (353 sec. ft.). It

is to be noted, in this respect, that the lack of a spirit of association and the small division of property, until recently, has incited beyond necessity the construction of relatively small individual canals—less than 3 m^3 per sec. (106 sec. ft.) and 25 km. (15.5 mi.) length—thus wasting effort which, associated, would have notably reduced the costs of construction and exploitation and permitted better technical conditions of operation.

This condition is now disappearing with the larger subdivision of property, which today requires collective action for the efficient construction of the features of the numerous irrigation works of greater magnitude than can be undertaken alone.

There is, in general, as in the United States, a tendency to use an excess of water, thus prejudicing new enterprise where this element is scarce. But the greater gradient of the land in these regions and its very permeable character (recent alluvial soils) provide conditions which avoid the troubles which may arise from an elevation of the water table and a salting up of the cultivated strata.

The State, in the desire to stimulate a spirit of association, under these conditions, has undertaken the study of a series of canals and storage reservoirs, with the purpose of building them later for the account of those interested.

At the same time there are pending in the legislative chambers, various measures of legislation intended to stimulate irrigation, and relating to the execution of such works by the State.

The complication of these projects with ideas of improvement in the legislation regarding water, in such form as to suit the present needs of agriculture, industry and commerce, has delayed these undertakings to the present time; but it is hoped that soon they will be a reality and that at the same time we may have the most advanced code of laws in respect to these matters.

Recently a law has been approved authorizing the State to build four great canals, which will serve to irrigate 110,000 hectares (272,000 acres) of private property, at a cost of $3,000,000, the funds being provided by the Government by means of an internal loan guaranteed by the property of those interested and paid through a special tax. This shall be obligatory for all lands which lie below the waters of each canal when 70% of the pro-

prietors shall have agreed on and contracted with the Government for the construction of such irrigation works.

The State will turn the canals over to the private companies or associations for their exploitation, but will retain ultimate control until the cost of the construction shall have been totally amortized.

The increase in value in the lands of the irrigated districts is estimated at $10,000,000.

VII. HYDRAULIC POWER.

The territory of Chile is exceptionally well suited to the development of power from water. In effect, in this territory of 250 km. (155 mi.) width, extending between a mountain range with elevations up to 5000 m. (16,400 ft.) and the sea, all of the rivers have steep gradients which permit in short distances the development of considerable difference of level.

Furthermore, from the province of Aconcagua (Lat. 32°) to the south the rains are abundant, ranging from 360 mm. (14.4 in.) annual precipitation at this extreme to 3000 mm. (120 in.) in Pedro Montt (Lat. 42°), terminus of the central valley and the beginning of the zone of archipelagos. The rivers carry, for the most part, considerable quantities of water, which are less in the north where the mountains are higher, and greater in the south where they are lower.

Joined with these good conditions, the rivers of Chile present also certain difficulties in connection with the development by hydraulic power. In effect, from the small width of the country, the watersheds are in general of small extent, whence arises a great irregularity in the flow of the rivers, especially between latitudes 32° and 37°, in which the rains fall only in the winter. Furthermore, since the gradient of these natural streams is high, they carry along a great quantity of stones and sand, for which reason the diversion works are costly and the water unsuitable for turbines, unless indeed it be subject to previous settling. These inconveniences are, however, of small importance for the rivers in the south, which are more regular and carry water more clear, due to the fact that their watersheds are covered with forests.

The lack of roads for the transportation of machinery and materials of construction into the mountains and the lack of knowledge regarding the regimen of the streams, also introduce difficulties in connection with the development of hydraulic power. Regarding the regimen of the streams, the Government quite recently, through the agency of the Division of Public Works, has commenced to make a study of this subject.

In spite of this, the development of hydraulic power is already being undertaken. The most important installations are those of the Maipo River, for the lighting and electric traction in the city of Santiago (17,000 hp.), and of the Cochapoal River (14,000 hp.), with which the Braden Copper Co. operates its machinery. To these there must be added a very great number of smaller installations used for electric light in many cities and towns in the Republic, and for driving mills in the wheat growing districts of the country, where they operate prosperously, thanks to the reduced price of hydraulic power.

The State has, however, reserved certain rivers for the electrification of the central network of State railroads. This electrification is the subject of present study on the part of certain foreign companies interested in doing the work. According to the plans most generally accepted, this electrification will be made by power from the Aconcagua River (10,000 hp.) for the Santiago-Valparaiso section and branches, with a total of 235 km. (146 mi.); from the Cachapoal River for the section Santiago-Talca (8000 hp.) with 250 km. (155 mi.); and from the Laja River for the other section of the central network (8000 hp.) with 450 km. (280 mi.).

The last named river has in the open central valley at 20 km. (12.4 mi.) from the railroad line a fall of 25 meters height (82 ft.), with a flow which does not drop below 100 m^3 sec. (353 sec. ft.).

The rivers of the southern region (Lat. 37°-46°), which carry discharges of considerable magnitude—100 to 500 m^3 sec. (353 to 1766 sec. ft.)—and have a regimen much more regular on account of the greater annual precipitation and its better distribution through the year, present also important opportunities well suited for the development of hydraulic power, and these will certainly, when there is a larger population, form the basis of industries using wood as raw material.

VIII. RAILROADS OF CHILE.

The construction and exploitation of the railroads in Chile are carried out either by the State or by private enterprise.

Construction by the State.

The Division of Public Works includes a special section or bureau called "Inspection of Railroads Under Design or Construction", which has as its duty the study and supervision of the construction of State railroads.

The said bureau carries out, through its technical staff, the preliminary studies of the various routes presumably most advantageous for each new railroad. The General Council of Public Works selects the route to be adopted and the Ministry of Public Works gives the final approval. The Bureau of Inspection then carries out the final studies and completes the plans in conformity with standards fixed relative to the characteristics of the route and of the work to be undertaken, according to the gage and the category of the line under consideration.

By a special law or by the annual budget appropriation, the necessary funds are granted for carrying on the work, which in most cases is actually done by private contractors on the basis of previous competitive bids.

The construction of a new road completed, it is turned over to the "General Direction of Railroads" for operation.

Private Railway Lines.

The construction and exploitation of privately owned railroads is effected through antecedent concession or permission granted by a special law or directly by the President of the Republic;

Or otherwise by a special law, if the concessionaire asks for a subvention or a guarantee regarding the capital to be invested or any other financial assistance on the part of the State, such as a drawback on customs duties on materials and equipment destined for the construction or operation of the road, or the condemnation by right of eminent domain in the case of private property necessary for the execution of the work;

Or again by decree of the President of the Republic, when none of the aids or facilities above noted are requested, or

when the petitioners acquire directly ownership of the private property which the railroad will occupy.

The State always concedes the permission to occupy with railway lines all public lands, and even national property in public use, without other limitations than those derived from the necessity of giving due regard to the collective interests.

There is made to no railroad a definite reservation of territory to be served exclusively by it, but the Ministry of Railroads always considers, in the study of requests for concession, the legitimate interests of the existing lines, granting new concessions in harmony with the general interests of the region in which the road is to be developed.

Chile is composed of a strip of land of extraordinary length in relation to its width, followed in the extreme south by a multitude of islands of considerable importance. This continental strip of land extends from the range of the Andes on the east to the Pacific Ocean on the west. A second range of mountains develops along the coast. Between these mountain ranges there develop various transverse valleys, and one longitudinal valley perfectly defined between 33° and 41° latitude south.

In its long extension of coasts, there are found numerous harbors and bays suited to the utilization of maritime commerce as the principal mode of transport for the Republic. But these serve only for communication with distant countries, and between the diverse regions of the territory for the hauls which have, in the longitudinal direction, a considerable length with respect to that in the transverse direction.

However, this natural way for commercial transport would not have been sufficient to satisfy even moderately the necessities of the country, even if it had been profusely provided with harbors and with transverse railroads which would have connected them with the adjacent country.

The necessity of communication by regular and rapid means between important centers led to the installation of a railway line throughout the length of the territory. This line now extends from Zapiga to Puerto Montt, a distance of 3452 km. (2145 miles), with the sole exception of 278 km. (173 mi.)

projected (Arica to Zapiga), in order that the two extreme cities of the continental territory of the Republic may be united by rail. This longitudinal railway line may be considered as prolonged in the island of Chiloé by the railroad from Ancud to Castro and Lechagua, 97 km. (60 mi.) in length.

To the present time the general plan for the railroads of the country has not been determined by law. The various lines have been built as their necessity has become recognized, and in several cases when their utility could be foreseen in a near future.

However, in order to adopt the gage and the characteristics of the location, there has been held in view in recent years a methodical plan, according to which the general network of the railroads of Chile should be constituted of a principal longitudinal artery with ramifications to the principal seacoast cities and to the bounding countries, complemented by affluents to the first named, as secondary lines or as roads for local traffic.

A great part of the original lines of this system are found already constituted by roads built and operated by the State or by private individuals, but there are still lacking some important lines across the range of the Andes and the completion of other branches to harbors on the Pacific Coast. As regards the complementary lines, much is still lacking which is necessary for the industrial development of the Republic.

The country owes to private initiative the first railroad in South America, that from Caldera to Copiapó. The first studies for this line were started in 1845 and the first constructive work in March of 1850, the work of the first section of 51 km. (32 mi.) being completed in September, 1851, and in its entire length, between the two points named, on December 25 of the same year. This railroad, like others built by private effort, forms part of the present existing State system.

At the present time private enterprise is engaged in the operation of 3000 km. (1864 mi.) of railroad distributed as follows:

Gage of 1.676 m. (5 ft. 6 in.).....	121.00 km.	(75.18 mi.)
Gage of 1.453 m. (4 ft. 8½ in.).....	712.05 km.	(442.44 mi.)
Gage of 1.358 m. (4 ft. 5½ in.).....	5.00 km.	(3.11 mi.)
Gage of 1.270 m. (5 ft. 0 in.).....	155.00 km.	(96.32 mi.)

Gage of 1.067 m. (3 ft. 6 in.)	412.30 km.	(256.19 mi.)
Gage of 1.000 m. (39.37 in.)	276.15 km.	(171.55 mi.)
Gage of .762 m. (30 in.)	1318.51 km.	(819.40 mi.)

Among these, special mention should be made of the International Railroad from Antofagasta to Bolivia, on which the increase in traffic has required the undertaking of important works, such as the change of gage from 0.762 m. (30 in.) to 1 m. (39.4 in.), and the installation of the second track for the first 30 km. (18.6 mi.), works which are now in progress.

The Transandean Railroad, by El Juncal, has experienced serious obstacles in its operation, due to the lack of protection against snow, but it is sure that with such protection once provided in the places in which experience has indicated the need, the operation of the road will regulate itself and it will become as prosperous as the other private railroads of the country.

The 3000 km. (1864 mi.) of privately owned railroads are operated by 21 different companies. The capital employed in these roads reaches £19,925,600 ($96,838,000) which represents £6610 ($51,730 per mi.) per km. of road in operation.

Furthermore, note may be made of the Pueblo Hundido Railroad at Pintados, called "Longitudinal Norte", which is under private operation, while the capital for first construction, employed by the constructing company under the guarantee of the Government of Chile, is being amortized. Its length is 715 km. (444 mi.) and the capital employed amounted to £3,081,350 ($15,006,000).

The State, for its part, operates 4293 km. (2668 mi.) of railroad under three different administrations.

International Railroad from Arica to Alto de La Paz.

Gage of 1 m. (39.4 in.). Section in Chilean territory 207 km. (128.6 mi.).

Northern Central System which extends from Cabildo to Pueblo Hundido.

Gage of 1.676 m. (5 ft. 6 in.)	9.21 km.	(5.72 mi.)
Gage of 1 m. (39.37 in.)	1200.32 km.	(745.8 mi.)
Gage mixed, of 1.676 and 1 m.	166.52 km.	(103.46 mi.)
Gage of 1.435 m. (4 ft. 8½ in.)	196.25 km.	(121.95 mi.)
Gage mixed, of 1.435 and 1 m.	36.00 km.	(22.37 mi.)
Total	1608.30 km.	(999.30 mi.)

Central System, which comprises all public railroads south of Cabildo.

Gage of 1.676 m. (5 ft. 6 in.)	1999.20 km.	(1242.24 mi.)
Gage of 1 m. (39.4 in.)	285.50 km.	(177.40 mi.)
Gage of 0.60 m. (23.6 in.)	193.00 km.	(119.92 mi.)
Total	2477.70 km.	(1539.56 mi.)

It should be further noted that the International Railroad from Arica to Alto de La Paz has in addition to the 207 km. (128.6 mi.) in Chilean territory, 233 km. (145 mi.) in Bolivian territory, constructed and operated by the Government of Chile in accordance with a treaty between the two republics. The capital required for the construction of this section amounted to £1,517,450 ($7,374,800).

The capital employed in the railroads operated by the State of Chile is as follows:

International Road from Arica to La Paz (Chilean section)	£ 1,348,067	($ 6,551,605)
Northern Central System	£ 6,109,641	($ 29,692,855)
Central System	£31,930,949	($155,184,412)
Total	£39,388,657	($191,428,872)

It results from these data that the 8008 km. (4976 mi.) of railroads in operation in Chilean territory have required for first construction a capital of £62,395,603 ($303,242,631) or on the average some £7,800 per km. ($61,043 per mi.).

The mountain difficulties of the country, and in certain sections the river systems, have constituted serious obstacles to the construction of such a railway system as is required for the proper development of the natural resources of the country. Nevertheless, neither the State nor private enterprise has hesitated to overcome them once the necessity for a new line has been recognized. The greater part of these lines are characterized by their numerous artistic features: bridges and viaducts, tunnels, great cuts and fills, retaining walls, numerous secondary works for the removal of water, etc.

Without counting the installation of the second track, in the zones of greatest traffic of the central system, the State has at the present time under construction, 293 km. of new lines

(182 mi.) which will be incorporated soon into the existing system, with a capital expense for first construction of £1,438,675 ($6,991,960).

Designs are also completed for 1115 km. (693 mi.) of new line, with an estimated cost of construction of £4,936,000 ($23,988,960), and 1261 km. (784 mi.) of proposed lines are at the present time under study or design.

On its side, private enterprise has under present construction 794 km. (493 mi.) of railroads, and concessions have been granted for 693 km. more (431 mi.), construction work on which has been prevented by reason of difficulties growing out of the present European war.

Standards.

The railroads constructed by the State and certain privately owned roads, the operation of which stands in close relation with the State roads, follow in general the following standards,

Lines of the First Class.

	Gage		
	1.68 m. (5 ft. 6 in.)	1. m. (39.37 in.)	0.60 m. (23.6 in.)
Maximum gradient	1%	2.5%	3.5%
Minimum radii	300 m. (984 ft.)	150 m. (492 ft.)	80 m. (262 ft.)
Minimum distance between curves and reverse curves	100 m. (328 ft.)	60 m. (197 ft.)	50 m. (164 ft.)
Speeds	60 km. (37 mi.)	40 km. (25 mi.)	25 km. (15.5 mi.)

Lines of the Second Class.

Maximum gradient	2.0%	3.0%	4.0%
Minimum radii	180 m. (591 ft.)	80 m. (262 ft.)	40 m. (131 ft.)
Minimum distance between curves and reverse curves	60 m. (197 ft.)	40 m. (131 ft.)	20 m. (66 ft.)
Speeds	40 km. (25 mi.)	30 km. (18.5 mi.)	20 km. (12.5 mi.)

Lines of the Third Class.

Maximum gradient	2.5%	3.5%	4.5%
Minimum radii	180 m. (591 ft.)	80 m. (262 ft.)	40 m. (131 ft.)
Minimum distance between curves and reverse curves	40 m. (131 ft.)	20 m. (66 ft.)	10 m. (33 ft.)
Speeds	30 km. (18.5 mi.)	25 km. (15.5 mi.)	15 km. (9.3 mi.)

The type of rail adopted by the various companies has been calculated according to the special characteristics of gage, profile and traffic peculiar to each road.

In the case of the State roads, the character of the rail equipment has undergone continuous change by the adoption each time of types of rail of greater strength, as a result of which corresponding advance has been made in the weight of the rolling stock and the speed of the trains.

At the present time the rails employed have the following characteristics:

Gage 1.68 m. (5 ft. 6 in.)

Designation	Wt. per m.	Length	Section	I
A	44.6 kg.* (90 lb.)	9.14 m. (30.0 ft.)	55.77 cm.² (8.64 in.²)	1132 cm.⁴ (27.3 in.⁴)
B	39.6 kg. (80 lb.)	9.14 m. (30.0 ft.)	50.53 cm.² (7.83 in.²)	1019 cm.⁴ (24.6 in.⁴)
C	38.5 kg. (77.5 lb.)	12.00 m. (39.37 ft.)	49.49 cm.² (7.67 in.²	1062 cm.⁴ (25.6 in.⁴)
E	30.0 kg. (60 lb.)	10.00 m. (32.8 ft.)	38.20 cm.² (5.92 in.²	602 cm.⁴ (14.5 in.⁴)
P	25.5 kg. (51.3 lb.)	10.00 m. (32.8 ft.)	32.99 cm.² (5.12 in.²)	475 cm.⁴ (11.45 in.⁴)
L	25.0 kg. (50 lb.)	9.14 m. (30.0 ft.)	32.50 cm.² (5.04 in.²)	425 cm.⁴ (10.25 in.⁴)
S	27.5 kg.† (55 lb.)	10.00 m. (32.8 ft.)	35.50 cm.² (5.50 in.²)	540 cm.⁴ (13.0 in.⁴)
	15.15 kg. (30.5 lb.)	8.00 m. (26.25 ft.)	19.43 cm.² (3.01 in.²)	157 cm.⁴ (3.78 in.⁴)

* Used in the section of the Tobon in the line from Santiago to Valparaiso.

† Used in the road from Arica to La Paz.

In both the State and privately owned lines the use of tie plates has been standardized to a considerable extent, with the principal object of prolonging the life of the ties.

Among the woods of the country there is an abundant supply well suited for use as ties. Use is made, by preference, of oak and cypress, which are very abundant in the forests in the southern part of the country.

The line structures for the State railroads are calculated according to the type of train as follows:

(a) For gage of 1 m. (39.4 in.), locomotive with 3-coupled axles with weight of 14 tons* per axle and separated by 1.2 m. (47.2 in.). Tender of 30 tons weight on three axles. Cars of 32 tons weight on four axles. The train is composed of two locomotives with their tenders, followed by an indefinite number of cars.

(b) For gage of 1.68 m. (66.2 in.). Locomotive of 5-coupled axles spaced 1.4 m. (55.1 in.) and 16 tons weight per axle. Tender of 40 tons on four axles. Cars of 48 tons on four axles.

The train is made up the same as in the preceding case.

For the section from Santiago to Valparaiso, a train makeup is under consideration similar to type (b), but with an increase of 25% in the weights.

IX. OPERATION OF STATE RAILROADS.

The railroads owned by the State have been constructed either directly by the State or through intermediary agency, but once the construction is completed, the operation is carried on by an organization depending on the State itself. The only exceptions to this general rule have been in connection with the operation of the railroad which unites the city of Calera with Pueblo Hundido (Northern Central System) and the International Road from Arica to Bolivia, which are operated directly by the Supreme Government.

The governmental branch which builds or supervises the building of State railroads is the Division of Public Works. As soon as the construction of a railroad is completed, the Division of Public Works turns it over to an organization called the Di-

* The metric ton weighs 2204 lbs.

vision of State Railways (General Direction of State Railways). This branch of the Administration is occupied exclusively with the operation of the State railways, being forbidden to extend its activities to any other class of business.

From the very fact that the railroads which do not serve a mining or saltpeter district have been built by the State, it follows that the districts served by the State lines did not present the conditions necessary to have tempted, from the first, the investment of private capital. It is for this reason that the State railroads of Chile have presented from the first the characteristics of lines built solely for the purpose of developing the national wealth and without seeking in the execution of the work a source of income for the national needs. In other words, the State railroads of Chile may be classified among those built for development purposes. This policy, which guided the construction of the national roads, guided also the relations of these roads with their patrons, and it is for this reason that during long years the general funds of the nation have been drawn upon to make up the annual deficits of the State roads.

In order to prove these statements, reference is made to the following schedule of charges which the State railroads have made for the service rendered.

Freight Charge for One Ton (2204 lbs.) of the Products Most Commonly Carried—In Dollars

Distances in km.	Cereals and Wine					Wood, Coal, Flour				
	Year					Year				
	1900	1905	1907	1911	1915	1900	1905	1907	1911	1915
50.....	0.68	0.66	0.71	0.54	0.85	0.34	0.33	0.35	0.33	0.55
100.....	1.17	1.12	1.20	1.00	1.35	0.58	0.56	0.60	0.64	0.90
200.....	2.27	2.10	2.34	1.91	2.10	1.12	1.08	1.15	1.20	1.40
300.....	3.05	2.94	3.14	2.74	2.80	1.53	1.47	1.57	1.68	1.85
400.....	3.98	3.91	4.17	3.40	3.50	2.03	1.95	2.09	2.12	2.25
500.....	4.67	4.50	4.81	3.98	4.15	2.34	2.26	2.40	2.50	2.60
750.....	6.23	6.00	6.38	4.85	5.10	3.12	3.00	3.20	3.01	3.40
1000.....	(*)	(*)	(*)	5.32	6.40	(*)	(*)	(*)	3.32	3.95

The result of this condition of things was to maintain the railroads in a continual condition of bankruptcy, which re-

* The system does not reach 1000 km.

Passengers—Charges in Dollars.

Distances in km.	Year 1900			Year 1905			Year 1907			Year 1911			Year 1915		
	1st Cl.	2nd Cl.	3rd Cl.	1st Cl.	2nd Cl.	3rd Cl.	1st Cl.	2nd Cl.	3rd Cl.	1st Cl.	2nd Cl.	3rd Cl.	1st Cl.	2nd Cl.	3rd Cl.
50	0.81	0.54	0.27	0.78	0.52	0.26	0.61	0.41	0.20	0.57	0.38	0.19	0.64	0.43	0.21
100	1.82	1.22	0.61	1.72	1.14	0.57	1.15	0.77	0.38	1.13	0.75	0.38	1.24	0.83	0.41
200	3.74	2.50	1.25	3.44	2.29	1.15	2.23	1.49	0.74	2.34	1.56	0.78	2.36	1.57	0.79
300	5.19	3.46	1.73	4.69	3.13	1.56	3.21	2.14	1.07	3.10	2.07	1.03	3.42	2.28	1.14
400	6.82	4.55	2.27	6.25	4.17	2.08	4.10	2.73	1.37	4.00	2.67	1.33	4.40	2.93	1.47
500	8.44	5.63	2.81	7.81	5.21	2.60	5.00	3.33	1.67	4.78	3.19	1.59	5.28	3.52	1.76
750	12.15	8.10	4.05	11.26	7.51	3.75	7.30	4.86	2.43	6.47	4.31	2.16	7.12	4.72	2.37
1000	(*)	(*)	(*)	(*)	(*)	(*)	(*)	(*)	(*)	7.66	5.11	2.55	8.44	5.63	2.81

(*) The system does not reach 1000 km.

sulted in poor service and a complete neglect of the line and of the operating equipment.

The public made known its complaints with increasing emphasis, until in 1907 the Government granted to the State railroads a sum of about $5,000,000 to enable them to improve their service.

This sum was totally expended without any noticeable improvement in the service of the railroads, since the situation in which they were would have required the expenditure of a sum greater than that granted in order to have secured a permanent improvement.

The effects (temporary only) of this assistance having passed, the roads fell into a condition as bad as that which preceded the year 1907. The public again began to make complaints, and this time not only did they charge the road with blame for the lack of equipment, but also they charged the managing personnel with incompetency. The Division of Railroads in the face of this situation presented to the General Government a request for assistance in the sum of $22,500,000, in order to provide for the improvement of its equipment and plant generally, in a manner suited to the service demanded.

The Minister of Railroads, who at that time was Don Enrique Zañartu, studied in detail the proposition submitted by the Division of Railroads, and became convinced of the necessity of granting the sum requested, but in his opinion it was first necessary to pass a law reorganizing the railroads and fixing their relations with the State.

This law, which provided for the reorganization of the railroads, passed the Congress almost at the same time as the law which authorized the Executive to float a loan of $22,500,000 destined to improve the plant and equipment of the State railroads, and both were promulgated at the end of February, 1914.

As the operation of a State railroad is a business clearly industrial in character, it is necessary, in order to take account of the peculiarities which it presents in comparison with other railroads, to know in what manner a law which directs the operation of one of them determines its line of development along one or another course and imprints on it certain characteristics contrary to a rational organization. Because, in spite

of the absurdity of operating an industry on a basis so fixed and unyielding as that of a law drawn up by a congress composed of persons unacquainted with this industry, the fact remains that the State railroads of Chile have not been able to escape the difficulties of this situation.

The law of reorganization of the State railroads (1914) contains, in the midst of a series of dispositions disturbing to the regular operation of a railroad, three principal provisions:

(1) It creates a council which is to administer the railroads independently of the government.

(2) It establishes the roads of the State as an autonomous company.

(3) It requires that certain officials shall be professional engineers.

The council is composed of six members, elected, two by the Chamber of Deputies, two by the Senate and two by the President of the Republic.

The services of Councilor to the State railroads are absolutely gratuitous, strange as it may be in this epoch. In spite of this, those elected are all personages of the highest representation, university, political, and commercial, and thanks to this they have been able to improve, as will be seen later, the operation of the State railroads.

The second provision, relative to the autonomy of the enterprise, that is to say, the management independent of the Government, has not as yet been realized in practice to the full extent, because the transition from the former regimen, according to which the State railways depend directly on the Ministry of Railways, to the regimen created by the law of January, 1914, cannot be instantaneously realized.

The third provision, which requires that certain officials shall be professional engineers, has, for the State railways of Chile, an importance of the first order.

Railway enterprises pertaining to countries or companies of the English language have a system of operation entirely different from that which is used in other enterprises. While in the first named, freight traffic, passenger traffic, upkeep of the road and of the shops are the branches which constitute the

principal divisions of the administration; in the second, the operation, properly speaking, the upkeep of the road and of the shops, form the only active branches in the life of a railway undertaking.

Before the law of 1914, the direction of operation, properly speaking, and the administration of shops were placed in the hands of persons who had no preparation for the discharge of the duties of these positions. The results of this situation were felt during the entire time for which this condition prevailed and are even still felt. The complete lack of observations on the phenomena which daily present themselves in the operation of a railway line continues still with the State lines, living day by day and subject to all manner of unexpected occurrences, while at the same time it prevents the accumulation of data needed for future protective measures.

The law of 1914, which required that these posts should be filled by professional engineers in the hope to thus remedy the principal causes of the disorganization of the railway industry, provided for the admission into the railway department of those who will study the situation, the necessities, the peculiarities of the service, and who can thus in the end develop, in a clear manner, what is going on in the operation of the railways, and the most effective remedy for the troubles; things which the Government and the public have desired to know without ever having been able to obtain evidence from those who have had the management in charge.

The first concern of the Council was to reduce the expenses of the enterprise, and as this could not be carried to the extent desired, due to the lack of modern material and equipment, they decided to increase the tariffs.

These tariffs become operative at the end of the year 1914, so that the schedule given previously gives an idea of them.

Thanks to these measures, the year 1915 presents a favorable prospect for the interests of the State railways, since they have an almost complete assurance that the income will be greater than the expenses, a result unknown during about ten years in connection with these railways.

The State railways of Chile move annually about 12,500,000 passengers and 5,000,000 tons of freight. The average haul

for a passenger is approximately 50 km. (31 mi.) and for a ton of freight 180 km. (111.5 mi.).

The average income per passenger-kilometer in 1914 was $0.005 and per ton-kilometer for freight, $0.008 ($.00805 and $.0129 per passenger-mile and ton-mile). With the new tariffs it is expected to raise these figures by 20% for passengers and by 25% for freight.

The rolling stock includes 591 locomotives, with an average dead weight of 45 tons, and 6000 cars, with a total tonnage of 110,000 tons. Most of these cars are of metal frame, and it is the intention of the Division of Railways to bring its total freight equipment to this standard.

The weight of 45 tons for the locomotive equipment might, in spite of the exceptional profile of the State roads (2.8% gradient including curves), maintain the service with more or less regularity, but in the actual conditions, it has been necessary to discard this type and adopt one of greater power.

The types of locomotive which are employed belong to European or North American manufacture (Baldwin, Rogers) and a marked tendency is noted to select in their new acquisitions, locomotives of American make.

The passenger traffic is carried on in the central system of the State roads with the following equipment:

Coaches	Number	Seats
1st Class	136	7,939
2nd Class	63	2,721
3rd Class	141	13,956
Mixed (1st and 2nd Class)	22	580 1st 649 2nd
Dining cars	2	
Pullmans	9	304
Sleepers	23	422 berths

These coaches are almost entirely of American manufacture.

The principal freight traffic of the State railways comprises the following articles:

Wood	29%
Coal	9%
Wheat	7.5%

Animals	7.5%
Fruit and hort. products	6.5%
Furniture	5%
Wines and liquors	5%
Miscellaneous	30.5%

These percentages refer to the total number of ton-kilometers per year, which as above noted, amounts to 900,000,000, more or less.

The passengers are divided as follows:

1st Class	25%
2nd Class	18%
3rd Class	57%

These percentages refer to the total number of passenger-kilometers per year, which, as noted previously, reaches 600,000,000 more or less.

X. CARTOGRAPHY.

Aside from the primitive geographical charts drawn by the first Spanish navigators and foreign corsairs of the 16th to the 18th centuries, and those which were more carefully made of our coasts at the beginning of the 19th century by the celebrated navigators Fitz Roy, Nares, Mayne, Lecky, etc., we must, for the first attempts at surveying and map-making, refer to the efforts made by the Government of the Republic from its first years.

Already in 1823 the French MM. Bacler d'Albe and Lozier were employed for this purpose, but nothing of importance was realized.

Later on a contract was made with the French scientist, M. Claudio Gay, in 1830, to make a study of the natural history and the physical geography of the territory of the Republic. He published, shortly after, a monumental work in 14 volumes for the account of the Chilean Government and developed also a map of the country making use of astronomical and travelers' observations, completing them with the hydrographic part which he studied in London in 1846.

Another Frenchman, M. Amado Pissis, engaged under contract in 1848, devoted several years of active work to the construction of his map based on triangulation, and for many

years this has served as the basis for all cartographic work in Chile.

The national naval establishment, since 1834, has carried out hydrographic explorations, which, with brief interruptions, have continued to the present time.

The war against the Araucanos Indians, who, until about a half century ago, occupied the southern part of the country, resulted in a great improvement in the cartography of this territory, by reason of the fact that it was opened up to civilization, subdivided and given over to colonization.

By reason of the boundary litigation lasting through long years with the Argentine Republic, from which we were separated by the range of the Andes whose watershed line it was necessary to determine, a careful survey of these mountains was made, exploring, furthermore, in the southern part, between the parallels 38° and 54°, over the territory about the base of the mountains.

The procedure was by means of polygons, which starting from well-determined geographic coördinates, penetrated into the valleys of the principal rivers which flow to the Pacific, ascended these to their sources, and closed on themselves after having reached the headwaters of the rivers which flow into the Atlantic.

The determination of intermediate azimuths, of latitudes and longitudes of certain points, and the intersections at conspicuous peaks, constituted a good check. Between 1894 and 1903 more than 25,000 km. (15,500 mi.) of polygons were measured, with a proposed maximum error of 1 in 1000 from parallel 23° southward, inclosing some 350,000 km.^{2} (135,000 sq. mi.).

A similar procedure was carried out in the determination of the boundary between Chile and Bolivia which lies to the north of Argentina, measuring as far as the latitude 17°, 4000 km. (2480 mi.) of polygons inclosing some 50,000 km.^{2} (19,300 sq. mi.) of territory.

Thus was the work of survey of these lofty mountains completed along a length of more than 4000 km. (2480 mi.) by some 30 to 80 km. (18.6 to 49.7 mi.) in width. The results of this work have been published in four-color maps on a scale of 1 : 25,000 from latitude 17° to 55° south.

The Chilean army having been reorganized subsequent to 1891 with regard to modern methods, the General Staff began after 1893 the survey of the central zone of the territory in sheets on a scale of 1 : 25,000, with black contour lines at 20 m. (65.6 ft.) intervals.

This survey rests upon a geodetic network which covers the territory between parallels 32° 22′ and 33° 42′ of latitude. It comprises a base of 7666 m. (25,140 ft.) measured with a mean error of 2.77 mm. (0.111 in.). The mean error of an angle deduced from the network of triangles with the international formula is 1.11 sec.

The topography covers approximately some 15,000 km.² (5792 sq. mi.).

The work is being carried forward to the south to latitude 35°, in an approximate manner, where another base has been measured.

From the year 1907 to 1914 the Office of Public Survey developed a vast undertaking in the provinces of the North (Tacna, Tarapaca and Antofagasta, parallels 18° to 25° south) and in those of the South (Biobio, Malleco and Aranco, parallels 37° to 39° south), developing successively the works of reconnaissance of the ground, observation of boundaries, running of precision levels, determination of trigonometric points, construction of bench marks, measurement of bases, measurement of angles of the three orders, topographical survey on the scale of 1 : 25,000 and publication of the results on the same scale.

The base lines of 6.6 to 8.3 km. (4.10 to 5.16 mi.), three in number, have been measured with a measuring tape of "invar" which was compared at the place of measurement with a standard rule of nickel steel 4 m. (13.12 ft.) in length, with microscopes, most carefully studied at Breteuil. The error in these base line measurements is less than 1 in 2,900,000.

The work carried out may be given in résumé as follows:

Trigonometric reconnaissance of first order	95,275 km²	(36,790 sq. mi.)
Trigonometric reconnaissance of second order	38,924 km²	(15,030 sq. mi.)
Trigonometric reconnaissance of third order	5,518 km²	(2,131 sq. mi.)
Determination of points of first order	61,739 km²	(23,840 sq. mi.)
Determination of points of second order	16,512 km²	(6,376 sq. mi.)

Determination of points of third order	4,818 km²	(1,861	sq. mi.)
Measurement of angles of first order	38,312 km²	(14,795	sq. mi.)
Measurement of angles of second order	6,334 km²	(2,446	sq. mi.)
Measurement of angles of third order	4,135 km²	(1,596	sq. mi.)
Topography with 10 m. contour lines (32.8 ft.)	1,133 km²	(437.5	sq. mi.)
Precision levels	920 km²	(355	sq. mi.)
Staked leveling from three bases	22 km²	(8.5	sq. mi.)
Determinations of the mean level of the sea	6		
Fundamental latitudes	2		
Fundamental Azimuths	2		

On the occasion of the centenary of the national independence the same office issued a map of the country in six colors, in 22 sheets, on a scale of 1 : 300,000, with an alphabetical index of 18,300 names.

There have also been made 10 of the 16 continental sheets which pertain to Chile in the international map of the world.

The section of Mines and Geography of the Division of Public Works is occupied with the preparation of mining maps, and has published various plans in which matters relating to mining are more particularly shown.

In the present year, after the dissolution of the Office of Survey for reasons of economy, the Office of Topographic Charts was created, with a part of the personnel and the instruments, etc., of the Geodetic Section of this Office, which by reason of lack of funds has thus far not been able to undertake any work.

XI. MATERIALS OF CONSTRUCTION.

The materials of construction are very abundant in Chile and they are of excellent character even though their exploitation is not to the present time very far developed. State quarries are found scattered over the entire territory. On account of this very abundance, with some exceptions, these quarries are not worked on a scientific basis or with large operating plants. The varieties of stone most common are the granites, gneiss, limestone, and slates. Among the limestones there are found large deposits suited to the manufacture of limes and cements. The latter industry in recent times has developed on a great scale and may serve as basis for an export trade in the vicinity of shipping points, especially in the

central provinces. There exist also, already located and partly in exploitation, deposits of marble in various colors. The deposits of greatest importance thus far are found at the head-waters of the Huasco River, near Vallenar, along the Trans-andean Railway by Juncal, and at the head-waters of the Tinguiririca River.

Notwithstanding the abundance of stone, in recent years there has been great development in the use of concrete, due to the great abundance of good gravel and sand which is found profusely distributed along the beds of the numerous streams of water which cross the country to the south of lat. 30°.

Silicious sands suited to the manufacture of all kinds of glass are met with in various parts of the country.

The water courses have also given rise to the formation of numerous and abundant deposits of clay, which are used for the manufacture of adobe and burnt brick, and articles of pottery. Kaolin of excellent quality is found in large deposits in the northern part of the country, and a beginning of development for export trade has been made.

Gypsum exists in extraordinary abundance, but thus far its development has been only on a small scale. There are, in the range of the Andes, immense deposits in the valley of the Miapo River near Santiago, and in the valley of the Huasco River near Antofagasta, etc.

The greater part of the houses in the central part of the country were, until the year 1906 built of adobe or of baked brick. At this time the earthquake which ruined Valparaiso and caused much damage in Santiago indicated the need of a modification in the system of building construction. Since that time a large part of building construction has been carried out with metal framework or with reinforced concrete. There has also been developed a large business in the importation of iron and steel structural material, because even though the country has large deposits of the best iron ores, the iron and steel industry has not yet been established in effective form. At the present time there exists an establishment of blast furnaces for the treatment of ores belonging to a French company which has sought to utilize wood as a combustible, an undertaking which thus far has not met the expectations of the

inventors. Serious studies have not yet been made to ascertain whether or not the Chilean coal (lignite), which exists in great abundance between parallels 35° and 39° latitude south, may be utilized for the treatment of iron ores.

Regarding timber, it may be said that the entire southern region between 37° and 47° latitude is an immense forest rich in a great variety of species adequate for all classes of work. At the present time the principal timbers exploited are: the oak, the most abundant and cheapest ($0.01 U. S. gold per foot in the forest), a wood heavy and hard, used by preference in heavy carpenter work (sills, posts, beams, etc.); the beech ($0.02 U. S. gold per foot in forest), of medium weight, used for floors, ceilings, doors, windows, mouldings, etc.; laurel, a wood creamy white, used by preference for ceilings and boxing, mouldings, etc.; the lingue a wood hard and firm, which adapts itself well to polishing, and the bark of which is rich in tannin and is used for tanning leathers; the poplar, a timber of rapid growth, acclimated in the country and which furnishes a wood white, soft, and light, used freely in the central part of the country. Various varieties such as the myrtle, litre, etc., give very good material for coach building; the cypress, larch, etc., give excellent timber for various applications; the radal, hazel nut, llenque, etc., furnish timber well adapted to handsome finish; and finally, the araucariain pine and the manio give resinous woods of good quality.

The timber industry occupies a place of importance in the national economy, but for the most part, thus far, its exploitation has not been rationally treated.

The raw material for the manufacture of a series of other articles exists in the country, as, for example, pigment earths for paints, bitumens, pitch, etc.

XII. HIGHWAY BRIDGES.

In Chile, special attention has been given to highway bridges only since some 27 years ago (1888), when was created the Governmental Division of Public Works, which has centralized the execution of all the public works of the country.

Before this period, highway bridges of any importance were rare. Among the most notable, mention may be made of

those over the Maipo and Cachapoal Rivers, on the main road traversing the Republic from north to south. Both works, which still exist, thanks to the repairs made on various occasions, are of pine wood and give a more exact idea of the systems of construction used in those times. The bridge over the Maipo, the life of which reaches already to more than a half century, is formed by three spans of 50 meters each (164 ft.) more or less, constituting in its structure a continuous truss of the Warren multiple type. The other is built on the Long system and has a length of 248 meters (810 ft.), divided into 9 spans.

In these two works, the structural members are formed of single pieces of timber, which constitute a characteristic of almost all of the bridges built in Chile previous to 1888, the use of iron being restricted to bolts, joint plates, and other secondary elements.

The supports of the two bridges named above are formed of large abutments of masonry, which form a real exception to almost all of the other highway bridges of the country, for which the foundations have generally been formed by means of a cluster of piles, driven by a pile driver, which then directly receives the superstructure.

As illustrative data, we may say that up to 1888 there had been built in Chile some 5000 m. (16,400 ft.) of highway bridges, no span less than 5 m. (16.4 ft.) being included in this figure.

From 1888 to the present time, the evolution in the construction of highway bridges presents three stages, more or less distinct, which show a constant progress toward better and better forms of construction.

In the first, which comprises the years between 1888 to 1902, the type of construction employed was the Long, already noted; that is to say, entirely of wood, and constructions which may be called "mixed", of wood and iron, similar to bridges of the Howe system in North America. At the end of this period, the constructions of the Long type had been completely superseded and use was made of the Howe system alone, which is superior to the former from the view-point of dead-weight.

However, the Howe bridges, built moreover with pine timber, were still very heavy and took (under load) very considerable deformations. This, with the rapid action of time, which promptly began to rot the timbers of the truss members, etc., led to the desire to substitute for them other more acceptable types of construction.

The new system, which has completely replaced this construction and which has been employed chiefly during the years from 1902 to 1910, that is, during the second stage of the evolution of highway bridges as noted above, is the Fink.

This is a mixed type of wood and iron, but in this construction, use has always been made of the national pellin oak timber, and in a few cases a length of span of 20 m. (65.6 ft.) has been exceeded, while in the Howe, lengths of 30 m. (98.4 ft.) were reached.

Simultaneously with the Fink type of construction, and for spans less than 12 m. (39.4 ft.), bridges in this second period were exclusively built of timber (oak) formed by simple longitudinal beams.

The average life of the Fink bridges may be put at about 20 years, while that of the Howe has not exceeded 15 years under the same conditions. This circumstance, joined to the lesser weight and to the greater facility of construction, fully justifies the change from one type to the other.

We come finally to the third stage in the evolution previously indicated, and which comprises the period of time beginning in 1910. During this period, great improvements have been made in construction of our highway bridges by the introduction of steel as the only material for the trusses and other parts of the bridges. During this period there have been completed for use numerous bridges of the Fink type, a number of the Warren type, Monier type, etc., and also of special types similar to the Gerber or cantilever trusses, all of these in steel.

From, and even before, 1910 to the present there have been made a number of designs for bridges of reinforced concrete, and a number of works of this character have been built, among which mention should be made of the bridge over the estuary of Viña del Mar, of 90 m. (295 ft.) length.

The cost of bridge construction in steel is, at least in the central region of the country, more or less the same as that of construction in wood, and only in the Southern provinces, that is, in the timber region, is the cost less for the latter material; and for which reason in these districts wood is still used, especially for works of secondary importance.

What has not varied substantially since 1888 to the present time, is the abutment construction for Chilean bridges. Today, even as in past years, the foundations are usually made of piling driven by a pile driver. There has, however, been some change in the sections used and in the manner of anchoring them. The system as a whole has given good results and is economical. It would not have been possible to build the great number of highway bridges which now exist throughout the country if in each case it had been necessary to employ the expensive modes of construction with compressed air necessary to reach firm ground.

Nearly all of our rivers rise in the range of the Andes mountains, and must fall thousands of meters in less than 300 km. (186 mi.) of distance in order to reach their outlet in the Pacific Ocean. They have thus formed channels of great steepness of slope with loose rock bottoms in which the velocities of the water are also naturally high, producing excavations of several meters, even in rivers of secondary importance. Under these conditions, in order to realize a sufficient degree of security, it has been necessary for pier foundations to go down to 7 or 8, or even in some cases to 10 or 15 meters and more (23 or 26.2, 32.8 or 49.2 ft.), below low water. From these conditions there has resulted the use of piling foundations, which is most economical and sufficiently reliable, as already noted.

Another characteristic, similar in all highway bridges in Chile, is the roadway, which has in all cases been built of wood planking. Only in the most recent years some experiments have been made with concrete; but this material is still in the period of trial.

Between 1888 and the present time, there have been built throughout the country, highway bridges with an aggregate length of 32,000 m. (104,960 ft.), of which 4600 m. (15,088 ft.)

are of steel and some 150 m. (492 ft.) are of reinforced concrete.

The average cost of highway bridges in the central region of the country is today $130.00 U. S. gold per lineal meter ($39.63 per ft.), a figure which also applies to those of wood.

XIII. HIGHWAYS.

In a new country such as Chile, and in which industrial life has but recently made a beginning, there is a lack of highways and roads which merit such name by their good condition.

The lack of funds in sufficent quantity, for one reason, and the peculiar climate of the country, with very copious rains in the winter, little or very infrequent rain in the summer, together with flowing rivers of great steepness of gradient, render it very difficult to maintain the roads and bridges in a suitable condition.

At the present time we cannot pretend to be on a par with the most advanced countries in the matter of road construction, but there exists the clearly formed determination not to remain among the most backward.

In order to realize this result, we must consider the various factors which enter into the problem of the preservation of highways or the nature of the work best suited to their construction or improvement.

The configuration of the country, which extends from latitude 18° to 54° south, with an average width of 100 km. (62.14 mi.) in the east and west direction, with a most extensive coast line along the western border, with a continuous and forbidding mountain chain on the east,—these conditions require a peculiar system of highways in relation with the requirements which they must serve, in order to provide transport to the coast or to the principal centers of consumption for the various products of the soil.

The railroad (Ferrocarril Longitudinal), which traverses three-quarters of the territory, is another factor which has required consideration in a study of ways and means adapted to bring to it the internal commerce of the country. For this reason, the principal highways are relatively short, although very hilly.

In Chile there are three distinct zones, distinguished not only by their different products, but also by the conditions of climate and of work.

In the first, which comprises the provinces of Tacna, Tarapacá, Antofagasta, and Atacama, the vegetation is scanty and the rains entirely lacking or very infrequent. The roads, which comprise a total length of 7666 km. (4764 mi.), are few and used by no great amount of traffic, due to the fact that the principal product, saltpeter, is carried by railroad from the points of production to the coast for shipment.

In the second zone are comprised the provinces of Coquimbo, Aconcagua, Valparaiso, Santiago, O'Higgins, Colchagua, Curicó, Talca, Linares, Maule and Nuble. This is the most densely populated part of the country, agriculture being the principal source of wealth. In the winter the rains are copious, and infrequent or entirely lacking in the other seasons. The roads are frequent and used for extensive traffic, with an aggregate length of 15,355 km. (9542 mi.).

The third zone is the region of forests and of rains throughout the year. This comprises the provinces of Concepción, Arauco, Bio Bio, Malleco, Cautin, Valdivia, Llanquihue and Chiloé and the Territory of Magallanes. The principal products of this region are timber and cattle. Some beginning in agriculture has recently been made, and with success, in those lands which have been cleared. There is but a small extent of highway construction in comparison with the area, and those which are there are poor enough and difficult of upkeep by reason of the soil, which is very moist and heavy. The total extent of road construction aggregates some 10,408 km. (6468 mi.).

As already noted, in the first zone the roads are few, the traffic small and the upkeep of the roads easy, because the rains do not destroy them. In the second, or central zone, the roads are extensive, with heavy traffic and difficult of upkeep by reason of the nature of the soil, and the severe winter rains which convert them into heavy mud, and the scarcity of funds granted for their opportune repair.

The work which is done is of necessity limited in these three zones to a repair of the roads during the dry seasons,

which is the period of heaviest traffic, to then return again the following year to repeat the same work.

The law under which the construction of roads and highways is carried on dates from the year 1842, supplemented by the decree No. 2397 of August 1911. The width of the roads varies between 12 and 15 meters (39.4 and 49.2 ft.) between fences, but pavements are limited in width to 6 to 8 meters (19.7 to 26.2 ft.), according to their importance.

In the provinces of Santiago and Valparaiso, definitive paving construction has been undertaken on some of the principal highways, using crushed rock and other materials recommended by experience elsewhere, but it has not been possible to extend this beyond the great centers of population.

For the last two years, the Government had undertaken to proportion the funds necessary for definitive road construction work throughout all the provinces; but well-known conditions, and especially the European war, have rendered it impracticable to adhere to the proposed scheme.

The action of the General Bureau of Bridges and Roads, under the Division of Public Works, proceeding within the funds disposable, has limited itself to the execution of more or less temporary work, but destined to become permanent at a later time, over an area more or less considerable. To this end, the first step taken is to drain the roadways by means of ditches on both sides, thus facilitating the run-off of water and protecting the foundation of the pavement by thorough drainage.

With regard to the roadway itself, the principal work consists in placing certain layers of crushed rock of varying sizes, and suited to the nature of the soil, the density of the traffic which the pavement is to support, and the facility for obtaining the material, which, on occasion, must be transported from distances relatively great.

The road construction, in charge of engineers and employees who have qualified themselves as competent for practical work, is carried out with judgment and economy, being watched over by local committees, who are naturally interested in the good execution of the work and in the best possible use of the funds disposable.

The general work of upkeep on the highways is carried out by squads of workmen distributed in all the provinces and specially charged with the work of maintaining a clear way for the traffic on the principal roads, either as regards improvement or new construction, in relation to the needs of commerce in the region in which they operate.

It is to be hoped that with the greater interest which is becoming evident among the landholders for maintaining the roads and highways in good condition, and with governmental aid, we may hope to have, at a not distant time, a system of good roads, which, giving facilities for commerce, would also constitute an evidence of progress in the country and of the purpose of its rulers to place it in the position which it merits by the fertility of its soil, and its climate, mild and suited to all types of cultivation.

XIV. PAVEMENTS.

City pavements, previous to 1898, were made exclusively of cobblestones and paving bricks on a foundation of sand, but at that date experiments were undertaken with various materials, beginning with blocks of wood on a foundation of concrete and blocks of granite (Belgian) on a foundation of crushed rock. Later a large extension of pavement work was carried out in Trinidad asphalt, but without realizing the good results which have been obtained in other countries, as a result of which, later work of this character has been carried out with rock asphalt from Ragusa and from San Juan de Mayerhols and from Seysel; and furthermore, use has been made of granite blocks on a foundation of concrete, with concrete binder. More recently, Tarvia and Bitulithic pavements have been laid.

The financing of street pavement work has been chiefly by means of special taxes laid by the municipality, sufficient to cover one half of the cost, laying upon the proprietor of the adjoining territory the obligation of paying the other half, cash down, and the payment of the special tax is taken from the general municipal tax levy; or otherwise by means of a special tax guaranteed by the city government and sufficient to cover two thirds of the cost of the pavement, the remaining third to be paid by the owner of the adjoining real estate, cash

down, and the interest and amortization of the obligation are met by means of a special pavement tax, paid by all the property holders of the city, whether or not they hold property abutting on the paved street.

In the case where the municipality has carried out paving work, the care of the same falls upon the contractor during a period, variable between three and five years, the pavement then passing under the authority of the municipality, which is to exercise all care and provide for upkeep from the funds furnished by the tax levy for general municipal service.

The tramways pay for and maintain the pavement between the rails and in addition for 0.5 m. (1.64 ft.) on either side.

XV. THE OFFICE OF GEOGRAPHY AND MINES.*

The Office of Geography and Mines is a division of the public service which is closely connected with the mining industry and with the study of the geography of the Republic. Its activity in these matters is of great value, and what is still more important is the part which it has played in indicating to the Government the riches which are hidden in the interior of the earth.

There pertain to this office the following sub-divisions or sections: (1) The supervision and inspection of all works, either on the surface of the earth or below, which have for their object the exploitation and proving of mineral deposits. (2) Geological study and making the geological map. (3) Making a catalogue of the national coal deposits and of the important mineral zones. (4) Studies bearing on the mineral map of the country and on other like maps. (5) Investigation, examinations and reports relating to deposits which may offer mineral substances or raw materials suited to use in the various industries, such as petroleum, coal, iron, etc. (6) A study of underground waters, by means of borings and other like preliminary work, with reference to the needs of agriculture and industry, and potable water supply for the cities of the Republic. (7) A study of the geography of the country with reference to administrative delimitation. (8) Tests and

* Submitted by Jose del C. Fuenzalida, Chief Inspector of Mines and Geography, Board of Public Works of Chile, Santiago, Chile, S. A.

analyses of the various substances which result from the work of exploration and reconnaissance.

(1) The supervision and inspection, referred to in the first paragraph, are carried out only in those cases in which the government furnishes to private individuals the equipment or plant of which it disposes for making borings; but its intervention does not go further, because, as yet, it has not been legally given authority in this regard, so that in many cases the work carried on by individuals is ignored.

(2) As regards geological studies and the making of the geological map, the office thus far has not undertaken, in its full extent, so important an enterprise, concentrating its attention rather on geology applied to the development of the mineral resources of the country. This has led to the preparation of a number of monographs relating, not to isolated mines, but to types of deposits, in order to place in evidence their characteristic properties and to show under what geological conditions any given category of deposits in a given zone may have developed. This difficult and extended labor will later make possible the drawing of definite conclusions, from the collection of such geological studies, regarding the presence of deposits of any given mineral, and will save time, money and useless borings in territories where the geology does not indicate the formations characteristic of the product which is sought.

As another order of geological work, they have studied in many cases the nature of the sub-soil before locating works like embankments, storage reservoirs for water, etc. Also its assistance has been sought in cases where there has been danger or slides, fissuring, etc., or when underground waters have been sought.

(3) In the third section, especial attention has been paid to the study and general reconnaissance of the coal industry.

To this end, there has been carried out a series of reconnaissances, by means of borings, in various parts of the country, especially in the provinces of Concepcion and Arauco, which, in recent times, have been the most productive. In order to determine the coal-producing capacity with accuracy, surveys of the deposits have been made—an undertaking which is still in progress with some interruptions.

For the study and solution of so important a problem, some 20 borings have been made at government expense in various fields, aggregating a total depth of 1464 meters (4803 ft.). The survey covers an area of 340 sq. km. (131 sq. mi.).

The regions studied are the provinces of Concepcion and Arauco, over a total area of 1760 sq. km. (680 sq. mi.).

(4) The principal activities of the Office have been concerned with the work of this subdivision, and through the efforts expended it has been possible to cover, with complete maps, many mineral regions which are of great importance and which promise for the future a large field of activity.

For each one of the regions studied, a precision map of the first order has been made, on which have been noted full details regarding mineral deposits. Each of these maps, which are guides of the highest importance, shows also all railroads, highways, water courses, harbors, and such means of communication as may serve most efficiently for the demands of production.

In conjunction with the tachymetrical survey, work has been carried forward on the monograph of each mineral zone. These are covered in minute detail, including the entire period of discovery, development and production, with the general history of the minerals.

Up to the present time there have been published in colors the mineral maps of Chañaral, which comprise an extension of 24,000 sq. km. (9266 sq. mi.); of Vallenar and Freirina, with 20,000 sq. km. (7722 sq. mi.); of Coquimbo, with 35,000 sq. km. (13514 sq. mi.); of Aconcagua, with 14,100 sq. km. (5443 sq. mi.). At the present time work is progressing on the mineral survey of the Department of Copiapó.

Publication has been made of the monographs on the minerals of Chañaral, Vallenar and Freirina, and Aconcagua. Those for Coquimbo and Copiapó are now being published.

To this end, the office publishes a quarterly bulletin.

(5) In Chile the presence of petroleum has been known in the southern part (territory of Magellan) since 1912. A number of borings have been made showing the presence of this product, but the small quantities which have been obtained by this means have no more than served to establish its existence.